SL-2500
RMT-312

SERVICE MANUAL

US, Canadian and E Model

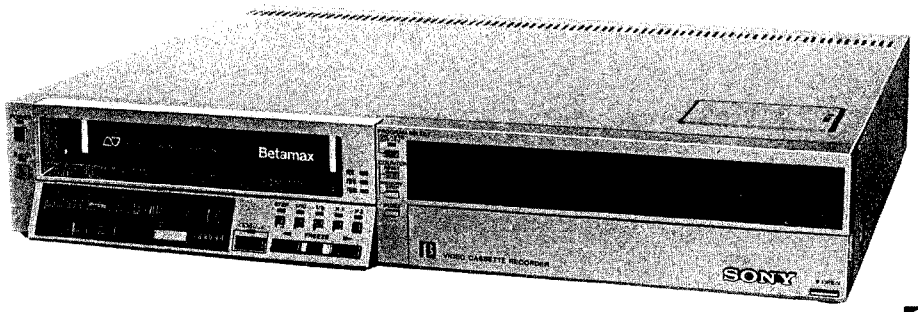

ßIII/IIRECORD
ßIII/II/IPLAYBACK

711D SYSTEM

March, 1982

SPECIFICATIONS

Also refer to OPERATION MANUAL and ADJUSTMENT MANUAL.

System

Video recording system	Rotary two-head helical scanning
Video signal	EIA standard, NTSC color
Usable cassettes	Cassettes having the mark ß
Tape speed	ßIII: 1.33 cm/sec.
	ßII : 2.0 cm/sec.
	ßI : 4.0 cm/sec. (only for playback)
Maximum recording time	
	ßIII: 5 hours
	ßII : 3 hours 20 min.
	(with Sony L-830 cassette)
Fast forward and rewind time	
	Under 3 1/2 min. (L-500)
Horizontal resolution	Color: More than 240 lines
Video S/N	Better than 45 dB
Audio frequency response	
	ßIII: 50–7,000 Hz
	ßII : 50–10,000 Hz
Audio S/N	Better than 40 dB

Tuner section

Video signal	EIA standard, NTSC color
Channel coverage	VHF channels 2–13
	UHF channels 14–83
	(up to 14 channels may be pre-selected)
Antenna input	VHF: 75-ohm F-type connector
	UHF: 300-ohm terminals
	(Antenna signal splitter incorporated)
Antenna output	VHF: 75-ohm F-type connector
	UHF: 300-ohm terminals

Inputs and outputs

Video input	Phono jack.....1
	1V p-p ±0.5 V p-p, 75 ohms, unbalanced, sync negative
Video output	Phono jack.....1
	1V p-p ±0.5 V p-p, 75 ohms, unbalanced, sync negative
Audio input	Minijack.....1
	−10 dBs, (0.44 V rms)
	(0 dBs = 0.775 Vrms) 47 kilohms
Audio output	Minijack.....1
	−5 dBs (0.4 V rms, at 400 Hz, 100 kilohms load)
	Less than 600 ohms
Camera connector	14-pin K-type connector
	Video in: 1 V p-p ±0.5 V p-p 75 ohms unbalanced, sync negative
	Video out: 1 V p-p ±0.5 V p-p 75 ohms unbalanced, sync negative
	Audio in: −20 dBs
	Audio out: −5 dBs (at load impedance 100 kilohms) less than 10 kilohms
	Power supply output: 12 V dc
Mircophone input	Minijack.....1
	−60 dBs, for low-impedance microphone

— Continued on next page —

Beta ß VIDEO CASSETTE RECORDER SONY®

MICROFILM

Consumer VIDEO

Timer section

Clock	Quartz-lock system
Control time	24-hour cycle
Timer setting	Only to start and stop recording 4 programs can be set over 14 days.
Power back up	Self-charging battery incorporated Back-up duration: up to 10 minutes at one time (after the battery has been charged at least 40 hours.)

General

Power requirements	120 V ac ±10%, 60 Hz ±0.5%
Power consumption	30 W (VTR) 56 W (Max. with accessories)
AC outlet	Unswitched max. 400 W
Operating temperature	5°C to 40°C (41°F to 104°F)
Storage temperature	−20°C to +65°C (−4°F to +149°F)
Dimensions	Approx. 430 × 80 × 365 mm (w/h/d) (17 × 3 1/4 × 14 3/8 inches) incl. projecting parts and controls
Weight	Approx. 9.4 kg (20 lb 12 oz) net

Accessories supplied

Betamax video cassette tape 1
External antenna connector
  EAC-24 (75-ohm to 300-ohm matching transformer).....1
  EAC-25 (300-ohm to 75-ohm matching transformer).....1
75-ohm coaxial cable with F-type connectors (2 m, 6 feet).....1
300-ohm twin lead (2 m, 6 feet).....1
Remote control unit RMT-312 with two size AA batteries.....1
Channel number segments.....1 set

Design and specifications subject to change without notice.

SAFETY-RELATED COMPONENT WARNING!!

COMPONENTS IDENTIFIED BY SHADING AND MARK ⚠ ON THE SCHEMATIC DIAGRAMS, EXPLODED VIEWS AND IN THE PARTS LIST ARE CRITICAL TO SAFE OPERATION. REPLACE THESE COMPONENTS WITH SONY PARTS WHOSE PART NUMBERS APPEAR AS SHOWN IN THIS MANUAL OR IN SUPPLEMENTS PUBLISHED BY SONY. CIRCUIT ADJUSTMENTS THAT ARE CRITICAL TO SAFE OPERATION ARE IDENTIFIED IN THIS MANUAL. FOLLOW THESE PROCEDURES WHENEVER CRITICAL COMPONENTS ARE REPLACED OR IMPROPER OPERATION IS SUSPECTED.

ATTENTION AU COMPOSANT AYANT RAPPORT À LA SÉCURITÉ!!

LES COMPOSANTS IDENTIFIÉS PAR UN TRAMÉ ET UNE MARQUE ⚠ SUR LES DIAGRAMMES SCHÉMATIQUES, LES VUES EXPLOSÉES ET LA LISTE DES PIÈCES SONT CRITIOUES POUR LA SÉCURITÉ DE FONCTIONNEMENT. NE REMPLACER CES COMPOSANTS OUE PAR DES PIÉCES SONY DDNT LES NUMÉROS SONT DONNÉS DANS CE MANUEL OU DES SUPPLÉMENTS PUBLIÉS PAR SONY. LES RÉGLAGES DU CIRCUIT OUI SONT CRITIOUES POUR LA SÉCURITÉ DE FONCTIONNEMENT SONT IDENTIFIÉS DANS CE MANUEL. SUIVRE LES PROCÉDURES OUAND LES COMPOSANTS CRITIOUES SONT REMPLACÉS OU LE FONCTIONNEMENT IMPRDPRE EST SUSPECTÉ.

TABLE OF CONTENTS

1. GENERAL

Location and Function of Controls 4
Camera Recording 9
Basic Operation 11
Playback 13
Timer-Activated Recording 15
Advanced Operation 19
Tape Copy/PCM Recording and Playback 21
Dubbing Audio 22

2. DISASSEMBLY

2-1. Cabinet Removal 23
2-2. Opening RR-1A Board 24
2-3. Removal of VL-3 Board 24
2-4. Opening TU-21, SS-10A Board 24
2-5. Opening TU-21, SS-10A, VA-3 and MI-2 Board (Check) 25
2-6. Tuner Removal 25

3. BLOCK DIAGRAM

Overall Block Diagram 27
System Control Block Diagram 30
System Control Block Diagram (1) 32
System Control Block Diagram (2) 33
System Control Circuit and Servo Circuit Interface 35
System Control Circuit and Audio Circuit Interface 35
System Control Circuit and Video Action Circuit Interface 37
System Control Circuit and Timer Circuit Interface 37
System Control Circuit and Tuner Circuit Interface 39
System Control Circuit and Mechanism Block Interface 39
System Control Circuit and Mechanism Interface 41
System Control Circuit and Tuner Circuit Interface 43
Capstan Phase System Timing Chart (REC) 45
Capstan Phase System Timing Chart (PB) 45
Capstan Speed System Timing Chart 46
Drum Phase System Timing Chart 46
Instrumentation Counter Timing Chart 47
Drum Speed System Timing Chart 47
FG Circuit Timing Chart 48
PG-A, PG-B, PG-S Timing Chart 49
PG-A, PG-S Timing Chart (REC/PB) 49
CTL Circuit of IC409 Timing Chart 50
Swing Search Servo Timing Chart (1) 51
Swing Search Servo Timing Chart (2) 52
Swing Seareh Servo Block Diagram 53
Swing Search Servo Timing Chart (3) 53
Servo Block Diagram (DRUM/CAPSTAN) 54
Reel Servo Block Diagram 56
8FG Signal Generator Timing Chart (1) 57
8FG Signal Generator Timing Chart (2) 57
Audio Block Diagram 58
Audio Level Diagram – REC/PB Mode – 59
Video Block Diagram 60
Video Y Block Diagram 62
Video Chroma Block Diagram 63
Timer Block Diagram 64
Power Supply Block Diagram 66

4. PRINTED WIRING BOARD AND SCHEMATIC DIAGRAM

Frame Schematic Diagram 70
VA-3 (Y & Chroma Signals Record/Playback Process) Printed Wiring Board 73
VA-3 (Y & Chroma Signals Record/Playback Process) Board Schematic Diagram 77
VA-3 (Audio Record/Playback Process) and (MIC Jack) Printed Wiring Board 81
VA-3 (Audio Record/Playback Process) and (MIC Jack) Board Schematic Diagram 85
Semiconductor 87
Tuner (BT-846) 88
SS-10A (System Control) and MB-3 (Switch) Printed Wiring Board 89
SS-10A (System Control) and MB-3 (Switch) Board Schematic Diagram 93
SS-10A (Capstan & Drum Servo Index/Reel Servo) Printed Wiring Board 97
Capstan Motor Board Schematic Diagram 100
Reel Motor Board Schematic Diagram 100
SS-10A (Capstan & Drum Servo Index/Reel Servo) Board Schematic Diagram 101
VL-3 (Slow Servo) Printed Wiring Board 105
VL-3 (Slow Servo) Board Schematic Diagram 109
SW-12 (Switch Tracking Control) Printed Wiring Board/ Schematic Diagram 112
FU-3 (Function Switch Indicator) Printed Wiring Boards 113
FU-3 (Function Switch Indicator) Board Schematic Diagram 115
RR-1A (Remote Control (Receiver) Tape Solenoid & Motor Drive Remaining Indicator) Printed Wiring Board 117
RR-1A (Remote Control (Receiver) Tape Solenoid & Motor Drive Remaining Indicator) Board Schematic Diagram 119
RL-7 (Relay) and LM-8 (Noise Filter) Printed Wiring Board/Schematic Diagram 122
LM-9 (Noise Filter Relay), RL-4 (Relay), CI-2, CI-3 (Switch) Printed Wiring Board 123
LM-9 (Noise Filter Relay), RL-4 (Relay), CI-2, CI-3 (Switch) Board Schematic Diagram 124
N (Infrared Receiver) Printed Wiring Board 125
N (Infrared Receiver) Board Schematic Diagram 126
TU-21 (Tuner), TU-22 (Relay) Printed Wiring Board 127
TU-21 (Tuner), TU-22 (Relay) Board Schematic Diagram 129
CH-21 (Tuning Switch) Printed Wiring Board/ Schematic Diagram 131
CH-22 (Channel Selector) Printed Wiring Board/ Sehematic Diagram 132
TM-34 (Program Timer/Tape Counter) Printed Wiring Board 133
TM-34 (Program Timer/Tape Counter) Board Schematic Diagram 135
SR-11A (Power Supply) Printed Wiring Board 137
SR-11A (Power Supply) Board Schematic Diagram 139

5. EXPLODED VIEWS

Cabinet Assembly 141
Front Assembly 142
Power Assembly 143
Main Board Assembly 144
Front Board Assembly 145
Cassette Loading Assembly (1) 146
Cassette Loading Assembly (2) 147
Chassis Assembly (1) 148
Chassis Assembly (2) 149
Chassis Assembly (3) 150
Chassis Assembly (4) 151
Drum Assembly 152
Chassis Assembly (5) 153
Chassis Assembly (6) 154
Chassis Assembly (7) 155
Chassis Assembly (8) 156

6. ELECTRICAL PART LIST

. 157

SECTION 1
OUTLINE

LOCATION AND FUNCTION OF CONTROLS

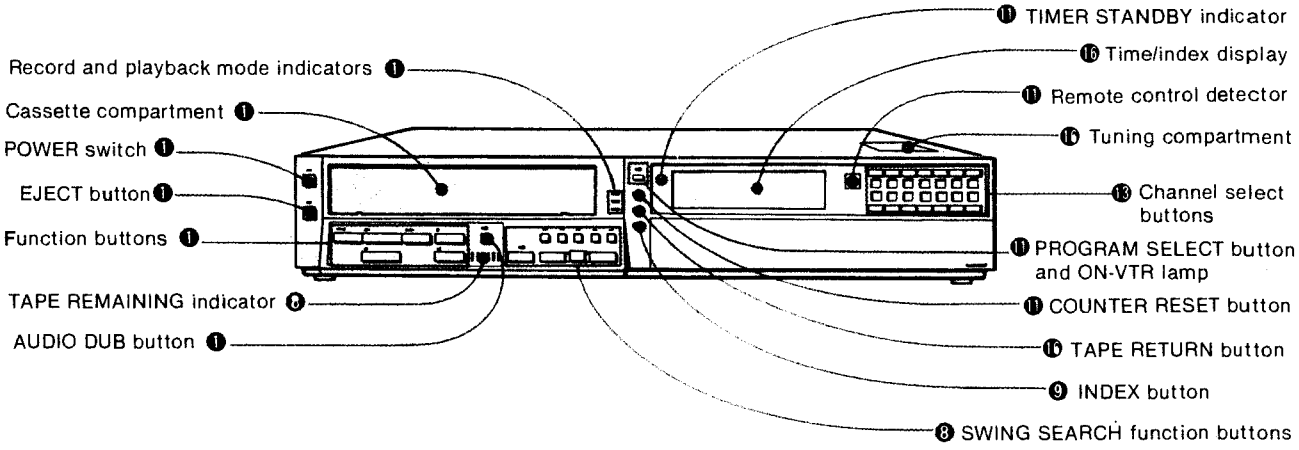

❶ Record and playback mode indicators
The lamp corresponding to the engaged record or playback mode lights up.

❷ Cassette compartment
Insert a cassette to be recorded or played back after turning on the recorder.

❾ POWER switch
Press to turn the power on. The lamp lights up.
To turn the unit off, press the switch again.
The timer section will continue to operate and the time will be displayed even if the POWER switch is off as long as the ac power cord is plugged into a working outlet.

❷ EJECT button
Press to remove a cassette.
This button does not function when the recorder is turned off.

❶ Function buttons

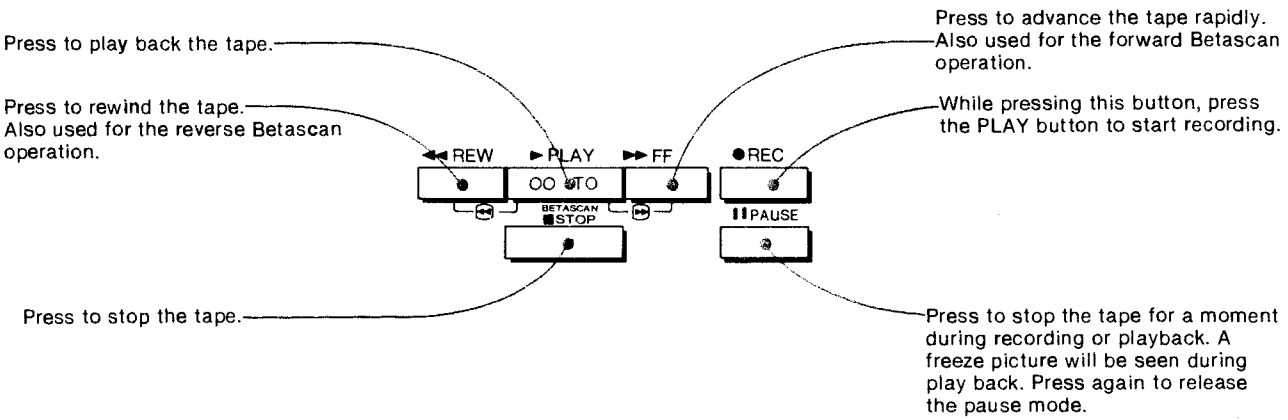

❻ TAPE REMAINING indicator
Shows the amount of tape remaining.

❶ AUDIO DUB button
Use this button to dub audio onto a previously recorded tape.

⑨ SWING SEARCH function buttons

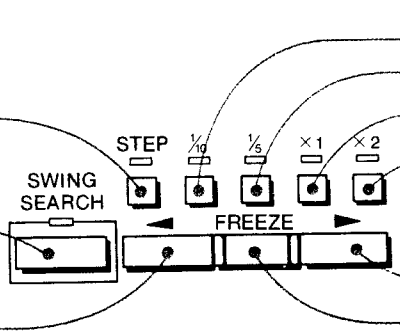

Press to obtain a slow-motion (1/10 speed) picture.
Press to obtain a slow-motion (1/5 speed) picture.
Press to obtain a normal speed picture.
Press to obtain a double-speed picture.
Press to obtain a frame-by-frame picture.
Press this button during playback to activate the SWING SEARCH function. The lamp will light up. After pressing this button, select the playback speed and the tape direction.
Press for playback in the forward direction.
Press for playback in the reverse direction.
Press to obtain a freeze picture.

⑨ INDEX button
Press to activate the index function and set the number of the recorded program you want to view.
The selected number will be dispaled on the time/index display.

⑩ TAPE RETURN button
Press this button in the stop mode to return the tape to the "0H00M00S" point on the time counter.

⑪ COUNTER RESET button
Press to set the time counter reading to "0H00M00S".

⑫ PROGRAM SELECT button and ON-VTR lamp
To view a TV program selected by a channel select button on the recorder or to monitor the picture being recorded, press this button so that the ON-VTR lamp lights up. When the ▶ PLAY button on the recorder is pressed, the unit is automatically set in this mode. To view a TV program in the usual manner, press this switch so that the lamp goes off. When the recorder is turned off, the recorder is automatically set in this mode.

⑬ Channel select buttons
Press the button of the channel to be recorded or to be viewed. The selected channel number will light.

⑭ Tuning compartment
All the switches and buttons for channel presetting are in this compartment.

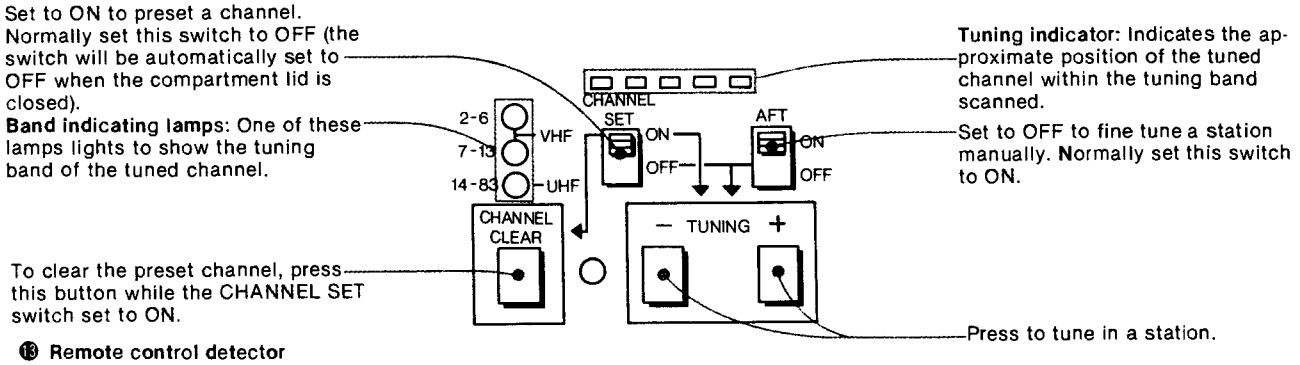

Set to ON to preset a channel.
Normally set this switch to OFF (the switch will be automatically set to OFF when the compartment lid is closed).
Band indicating lamps: One of these lamps lights to show the tuning band of the tuned channel.
Tuning indicator: Indicates the approximate position of the tuned channel within the tuning band scanned.
Set to OFF to fine tune a station manually. Normally set this switch to ON.
To clear the preset channel, press this button while the CHANNEL SET switch set to ON.
Press to tune in a station.

⑮ Remote control detector
Point the infrared transmitter of the supplied remote control unit here.

⑯ Time/index display
This indicates the present time when the CLOCK/COUNTER selector is set to CLOCK or when the recorder is turned off, and the tape running time at the normal playback speed when the CLOCK/COUNTER selector is set to COUNTER. Timer programs and the selected index number will also be shown.

When the CLOCK/COUNTER selector is set to COUNTER

Indicates how much the tape has advanced at normal speed.
Indicates that the display functions as a time counter.
This display appears only when the recorder is turned on.
Shows the index number selected with the INDEX button.

When the CLOCK/COUNTER selector is set to CLOCK

Lights when you are setting a day of the second week.
Shows a day of the week.
Lights when you are setting a turn-on time or a turn-off time.
Blinks when the settings for two or more programs overlap or when a timer recording cannot be made.
Shows a timer program.
Shows the present time or the turn-on or turn-off time.

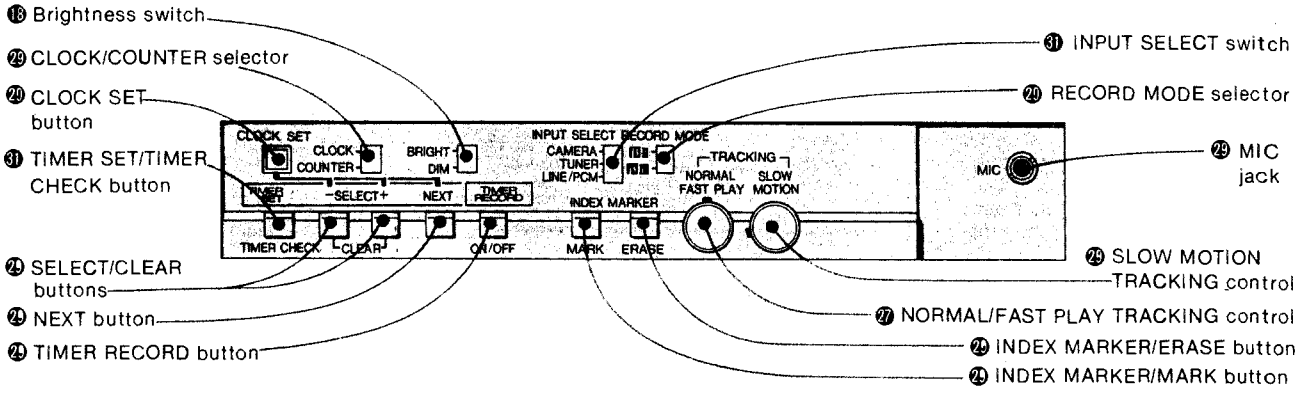

㉗ TIMER STANDBY indicator
This lamp lights up when the TIMER RECORD button is pressed after the timer program has been set.

⑱ Brightness switch
Select the brightness of the time/index display, BRIGHT or DIMMER, with this switch.

㉕ CLOCK/COUNTER selector
Select the display of the time display, either clock or time counter.

⑳ CLOCK SET button
Press to set the clock.

㉛ TIMER SET/TIMER CHECK button
Press to set the timer for recording.
To check the contents of a timer program, press this button.

㉔ SELECT/CLEAR buttons
Used to set the clock time, day of the week and timer programs.
To erase the contents of a timer program, press these buttons simultaneously.

㉒ NEXT button
Used for memorizing the clock time, day of the week and timer programs set by the SELECT buttons.

㉓ TIMER RECORD button
Press to activate the timer recording stand-by mode. The TIMER STANDBY lamp will light up.

㉔ INDEX MARKER/MARK button
Press to record an index signal at the desired point on the tape.

㉙ INDEX MARKER/ERASE button
Press to erase the index signal recorded on the tape.

㉗ NORMAL/FAST PLAY TRACKING control
Turn to eliminate the streaks or snow in a double speed or a reverse playback picture, or for playback of a cassette recorded by another video cassette recorder.
• Return the control to the dotted position after viewing the particular cassette.

㉕ SLOW MOTION TRACKING control
Turn to eliminate the streaks or snow for a freeze, a frame-by-frame or slow motion playback.
• Return the control to the dotted position after playback.

㉙ MIC jack (mini type)
Connect a microphone here. If your microphone has a phone-type plug, use a plug adaptor, such as the Sony PC-1A.

⑳ RECORD MODE selector
This selects recording tape speed, ▯▯II or ▯▯III, so that you can take full advantage of the various cassettes available. The recording time of any given cassette in the ▯▯III mode is 1.5 times that in the ▯▯II mode.
• Do not change the position of the selector during recording, or the playback picture and sound will be distorted at that point.
• The playback speed is automatically selected regardless of this selector setting.

㉛ INPUT SELECT switch
Select the program to be recorded.
LINE/PCM: for recording signals connected to the VIDEO IN and AUDIO IN Jacks.
TUNER: for recording TV programs.
CAMERA: for recording camera signals connected to the CAMERA connector.

Rear panel

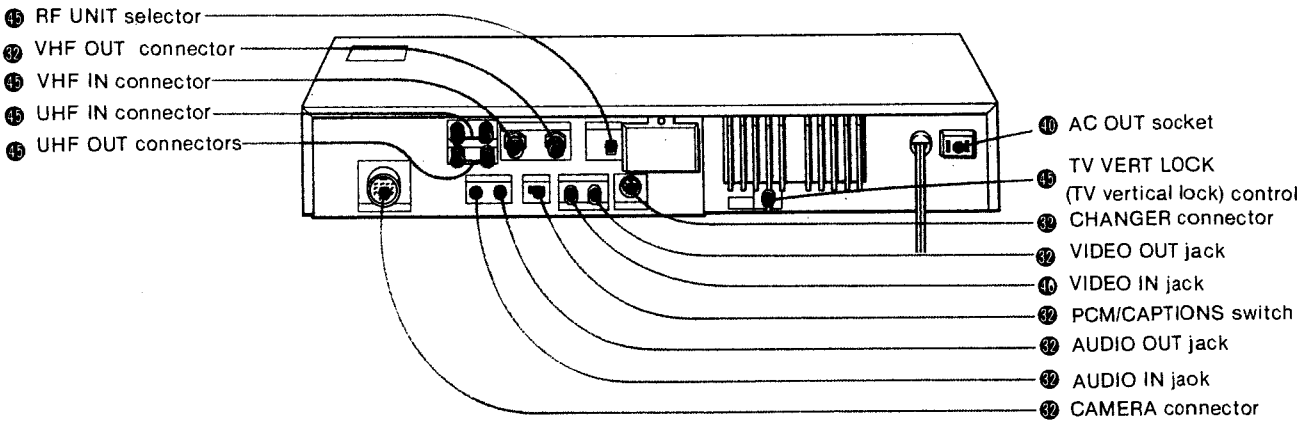

㉜ CAMERA connector (14-pin K-type)
Connect a video camera, such as a HVC-2200, etc.

㉜ AUDIO IN jack (mini type)
Connect to the line output of a sound source such as a cassette recorder or an audio amplifier, or to the audio output of a camera or another video cassette recorder.

㉜ AUDIO OUT jack (mini type)
Connect the audio input of another video cassette recorder, a video monitor, etc.

㉜ PCM/CAPTIONS switch
Normally set to the right position. For receiving captioned TV programs or for PCM recording and playback using a PCM adaptor, set this switch to the left position.

㊱ VIDEO IN jack (phono type)
Connect the video output of a camera, another video cassette recorder, etc.

㉜ VIDEO OUT jack (phono type)
Connect the video input of another video cassette recorder or of a video monitor.

㉜ CHANGER connector
Connect an AG-400 auto cassette changer which will be available in the near future.

㉜ TV VERT LOCK (TV vertical lock) control
If a jitter appears in the freeze, frame-by-frame or slow motion picture, first obtain a freeze picture and turn this control until the picture is stable.

㊵ AC OUT socket
This unswitched outlet supplies ac power to video or audio equipment whose power consumption is under 400 watts.

㊺ RF UNIT selector
Select the output channel at the VHF OUT connector. Set the switch to 3 CH or 4 CH, whichever is not active in your area.

㉜ VHF OUT connector
Connect to the VHF antenna connector of the TV receiver. The signal of a VTR program (which is converted into a VHF signal) and the VHF TV signal will be supplied to the TV receiver.

㊺ VHF IN connector
Connect a VHF TV antenna here.

㊺ UHF IN connectors
Connect an UHF TV antenna here.

㊺ UHF OUT connectors
Connect to the UHF antenna terminals of the TV receiver to view UHF TV programs even when the recorder is turned off.

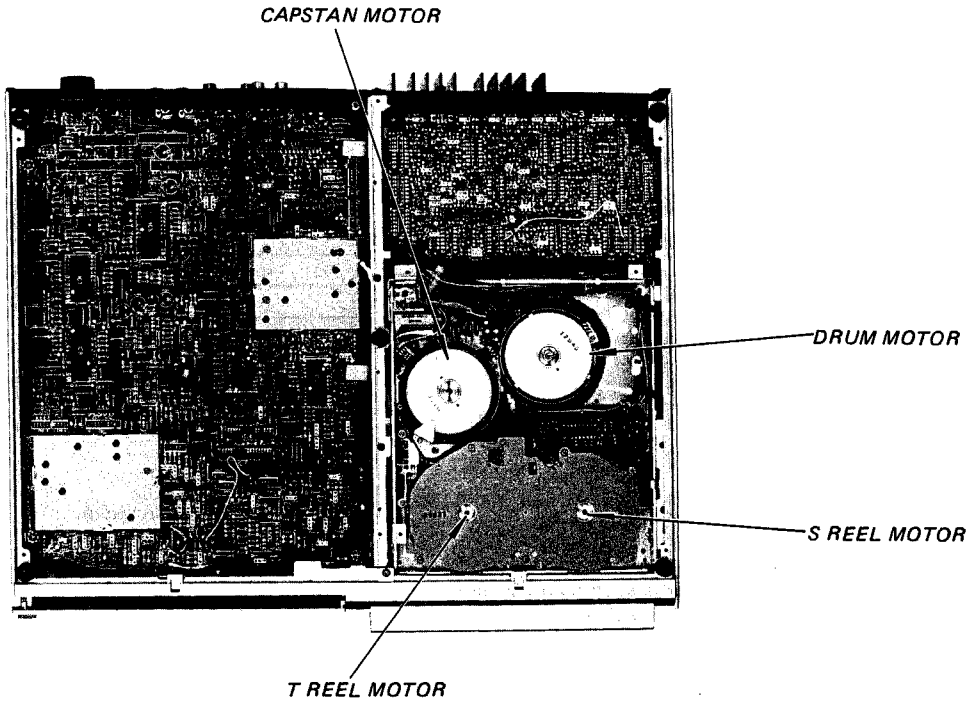
CAPSTAN MOTOR
DRUM MOTOR
S REEL MOTOR
T REEL MOTOR

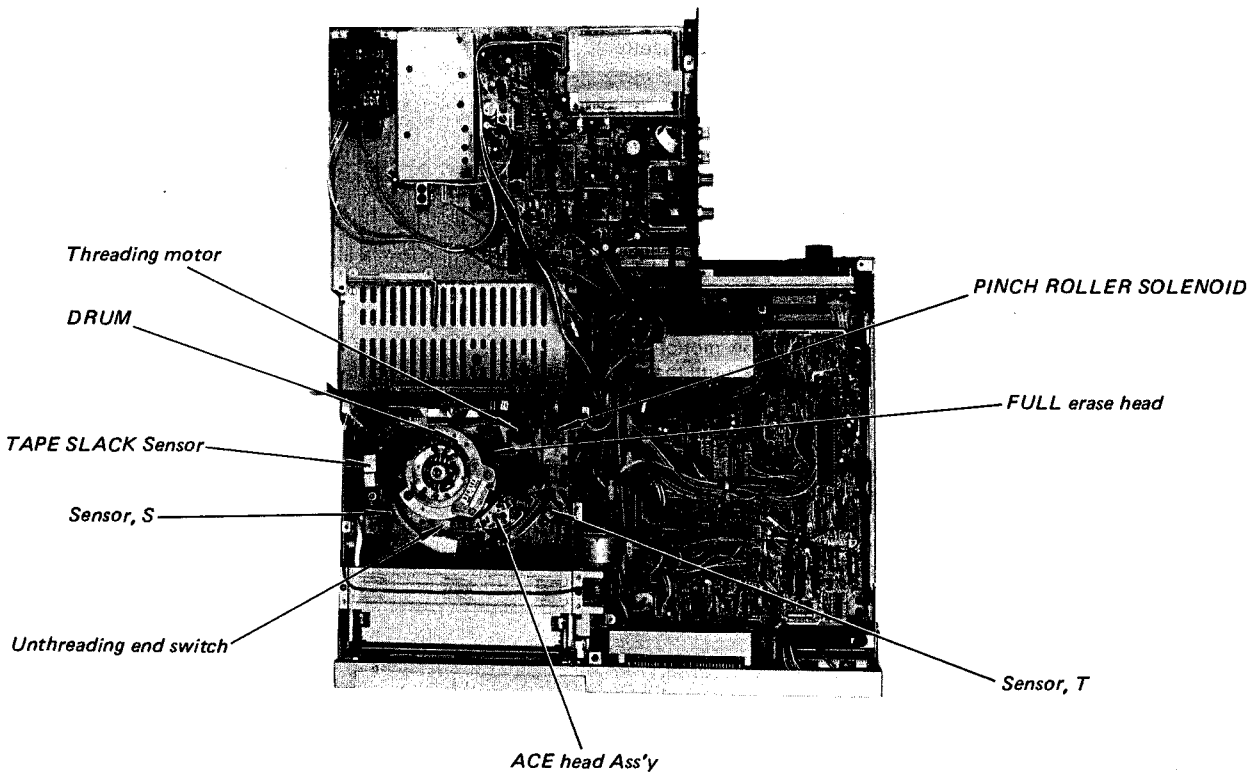
Threading motor
DRUM
TAPE SLACK Sensor
Sensor, S
Unthreading end switch
PINCH ROLLER SOLENOID
FULL erase head
Sensor, T
ACE head Ass'y

CAMERA RECORDING .....To produce your own programs

CONNECTIONS

- The camera must conform to American TV (EIA) standards.

Connect a power source first, then make the camera connection.

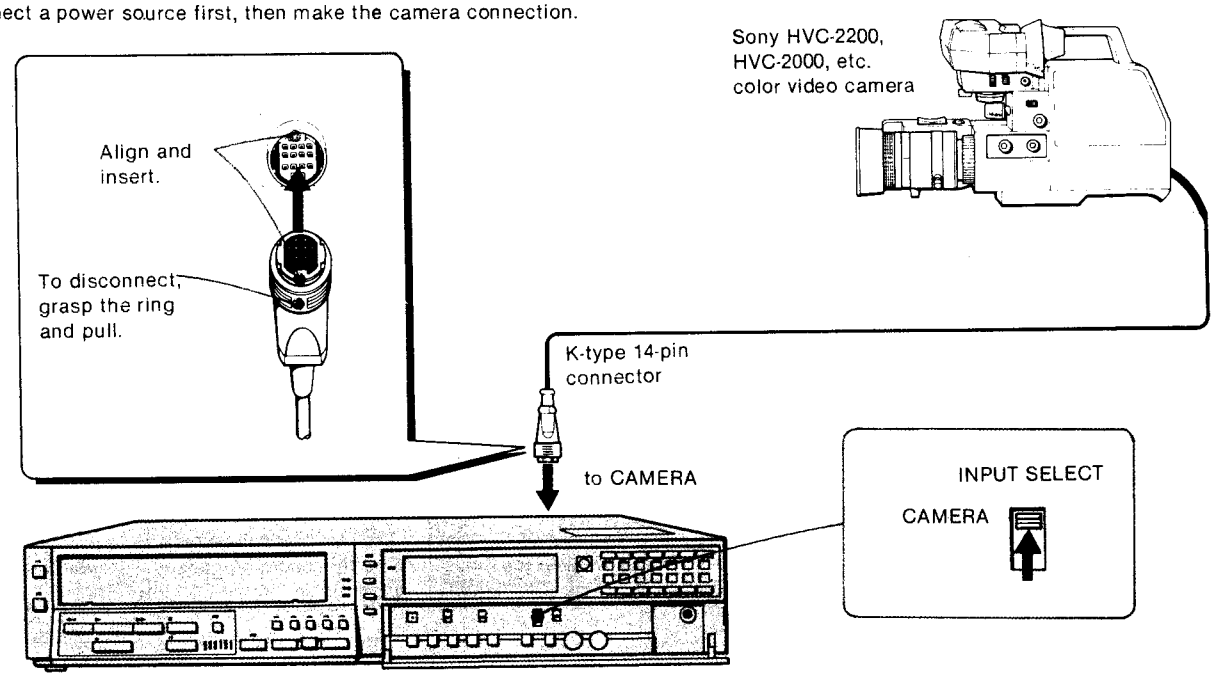

To connect a camera which is not equipped with a K-type 14-pin connector

Use an ac adaptor. Connect the video output of the ac adaptor to the VIDEO/PCM IN jack of the recorder and the audio input of the ac adaptor to the AUDIO IN jack or the MIC jack of the recorder depending on the audio output level of the ac adaptor.
Set the INPUT SELECT switch to LINE/PCM.

Note:

If you want to use a camera not recommended in this manual, make sure that the power requirement of the camera is DC 12V and power consumption is under 10W. Otherwise, the video cassette recorder will be damaged.

To record the sound from an external microphone

Plug a microphone into the MIC jack on the recorder. The microphone built into the camera will be disconnected automatically.

- If the microphone has a phone plug, use a plug adaptor such as the Sony PC-1A (optional).
- When a microphone is connected to the recorder, the sound from the camera is disconnected.

Do not move the INPUT SELECT switch during recording or playback when using a Sony HVC-2000 or HVC-2200 video camera. If you do, the recorder will be set into the pause mode. When the recorder stops, turn the power off and turn it on again.

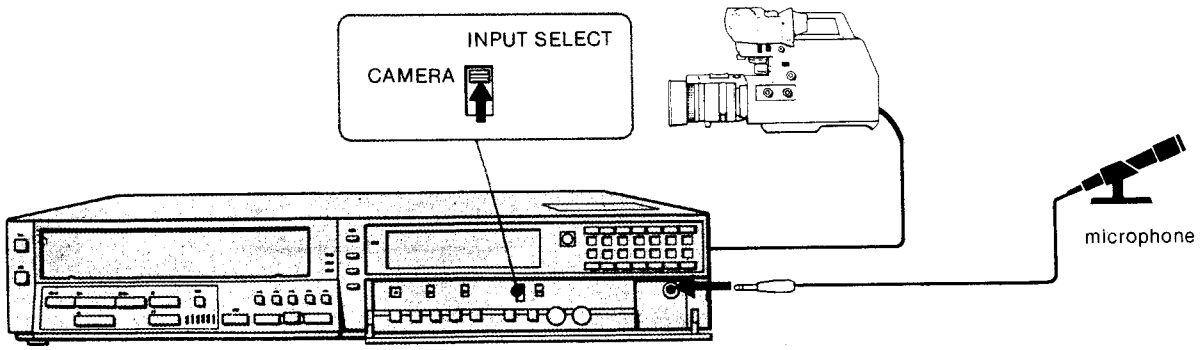

OPERATING PROCEDURE

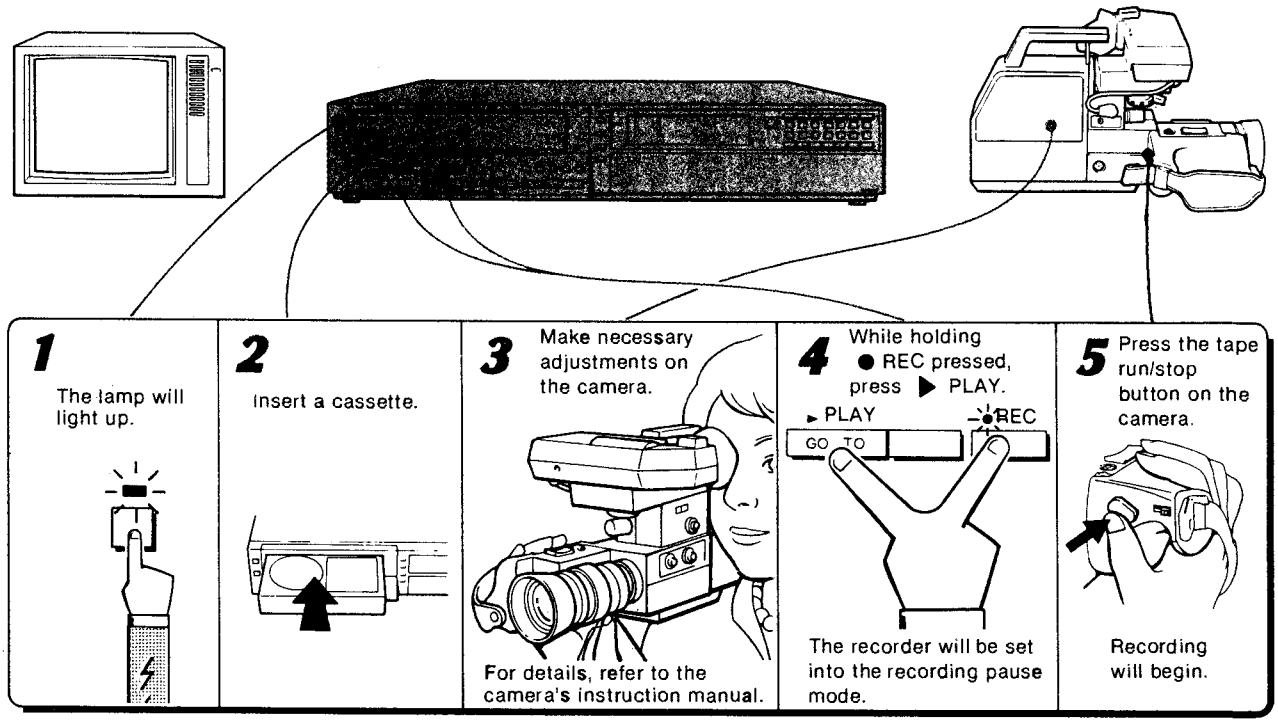

To momentarily stop the recording
Press the tape run/stop button on the camera or the PAUSE button on the recorder. To restart the recording, press the same button again.

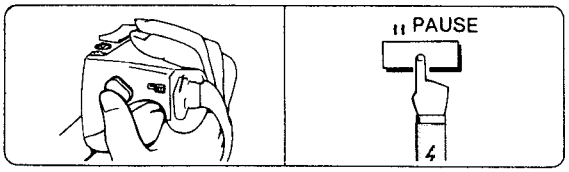

Automatic release: to protect the video heads and the tape, the pause mode will be automatically released after about 8 minutes. The recorder will revert to the record mode.

When the recording is finished.

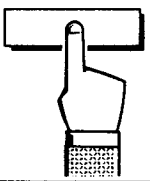

If the tape reaches the end, the tape will be rewound to the beginning.

TO MONITOR THE PICTURE BEING RECORDED WITH A CAMERA

Turn on the TV, select the channel for the video recorder and press the PROGRAM SELECT button on the recorder to light up the associated lamp.

RECORDING REVIEW

When a camera having a recording review function, such as the HVC-2200*, is used
Press the recording review button in the recording pause mode. The last few seconds of recorded scene will be played back immediately so that you can check whether the recording has been made correctly.

The recorder will then enter the recording pause mode at the point where the recording review button was pressed. To eontinue recording, press the tape run/stop button on the camera.

***For customers who have a HVC-2200 camera**
The small projection located near the zoom button is a recording review button. If this button is covered with a plastic cap, carefully peel off the cover over the button with a screwdriver or similar object.

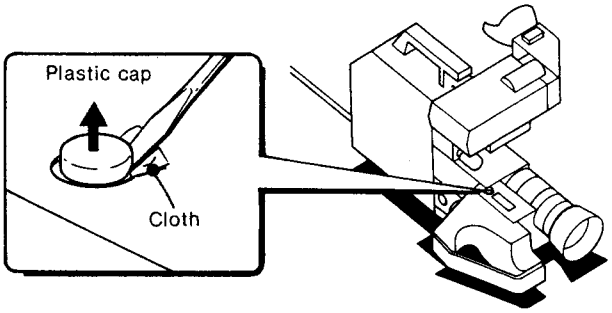

Caution:
Make sure that the plastic cap has not already been removed, and inadvertently attempt to pry up the button itself.

BASIC OPERATION
TV PROGRAM RECORDING

1 Turn on the TV and select the channel preset for the video recorder (channel 3 or 4).

ORD MODE

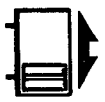

ECORD MODE to
sired position.
elow.)

7 Select the channel to be recorded.

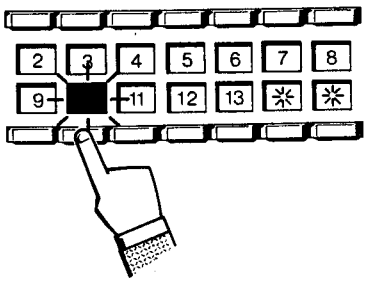

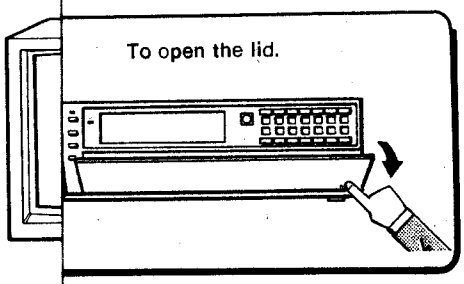

In case you want to record a tape which is to be played back on another recorder from the very beginning of the tape, run the tape for about 15 seconds before starting recording. Otherwise you may miss the starting point during playback on the other machine.

t be

the
utes

The recording modes
Select the recording mode according to the length of
to be recorded.

Mode	Cassette used			
	L-830	L-750	L-500	L-250
⊟II	3 hr. 20 min.	3 hr.	2 hr.	1 hr.
⊟III	5 hr.	4 hr. 30 min.	3 hr.	1 hr. 30 min.

◀◀

ack.

Recording cannot be done in the ⊟I mode although t
ed in the ⊟I mode can be played back with this reco

RECORDING ONE TV PROGRAM WHILE VIEWING ANOTHER

You can view one TV program while recording a different TV program which has been selected on the recorder.

❸ Start recording the desired TV program following the procedure above.
❸ Press the PROGRAM SELECT button so that the above lamp goes off.
❸ Select the channel you want to view on the TV.

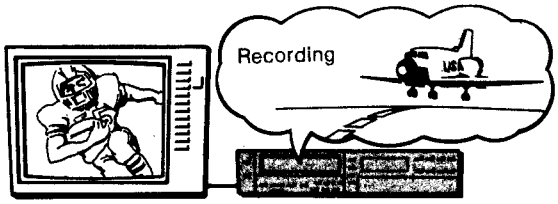

3 Insert a recorded cassette with the round window on the left.

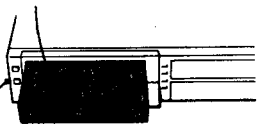

To take out the cassette, press EJECT.

4 Press PLAY.

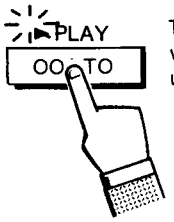

The lamp will light up.

Playback begins.

● The [B I], [B II] and [B III] modes will be selected automatically in playback depending on the mode in which the tape was recorded.

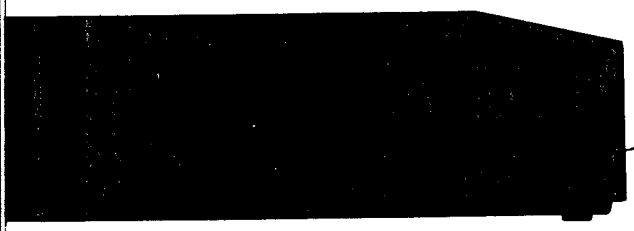

Video cassette recorder

TO CHECK THE AMOUNT OF TAPE LEFT ON THE REEL

The TAPE REMAINING indicator shows the amount of tape remaining while the tape is moving.

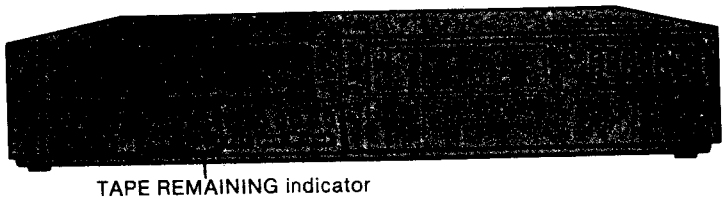

TAPE REMAINING indicator

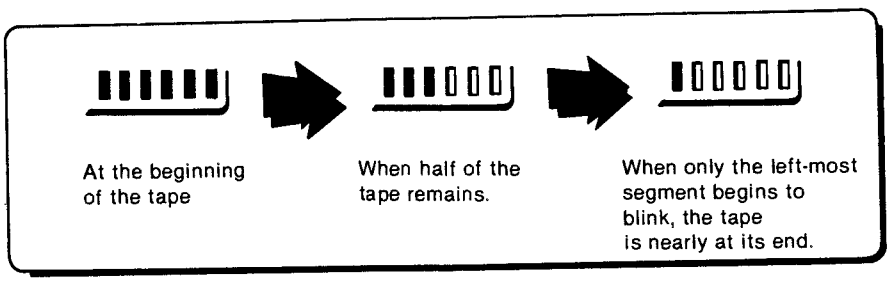

At the beginning of the tape

When half of the tape remains.

When only the left-most segment begins to blink, the tape is nearly at its end.

● For the first few seconds the indicator illuminations may fluctuate while the amount of tape is being determined.
● To know the amount of tape remaining during fast forward or rewind mode, play the tape back at normal speed until the illumination stabilizes, then rewind or advance the tape rapidly.
● The indicator only operates when tape on which a recording has been made is played back, rewound or advanced rapidly. It will not operate with a blank tape or with the unrecorded portion of a tape.

TIMER-ACTIVATED RECORDING

Using the built-in timer, recordings of up to any four programs occurring within the next fourteen days can be made automatically, even when you are not at home.

Check before setting the timer

- Is the clock set to the correct day and correct time? (For the clock setting, refer to the "SETTING THE CLOCK" of the accompanying set-up guide.)
- Is a cassette inserted in the recorder?
- Is the cassette long enough to record the programs? Check the setting of the RECORD MODE selector.
- Does the cassette have a safety tab on the bottom?
- Is the INPUT SELECT switch set to TUNER?

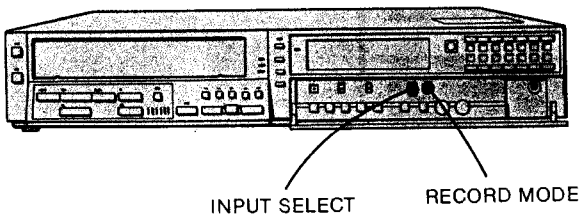

Examples of timer settings

The turn-on day may be a particular day of the week or every day. You need not set the four programs all at one time.

Program	day of the week	recording time	channel
A	Wednesday this week	8:00 p.m. – 9:00 p.m.	6
B	everyday	8:15 a.m. – 8:25 a.m.	2
C	Friday this week	9:00 p.m. – 11:25 p.m.	8
D	Tuesday next week	11:15 p.m. – 11:30 a.m.	10

Note: The timer cannot be set during recording.

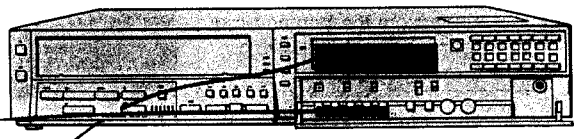

SETTING THE TIMER

Example: Suppose you want to set the timer to Program C above.

Button to be pressed	Time display The segment to be set will blink.
1 TIMER SET	SUN MON TUE WED THU FRI SAT TURN ON A (The timer setting of Program A will be displayed if it has been set.)
2 Select the program. Indication changes in alphabetical order. To go back to the previous indication. NEXT	SUN MON TUE WED THU FRI SAT TURN ON C SUN MON TUE WED THU FRI SAT TURN ON C
3 Select the turn-on day. Indication changes as follows: every day→SUN→MON→... →SUN with 2ND WEEK→... SAT with 2ND WEEK→every day To go back to the previous indication. NEXT	FRI TURN ON C FRI TURN ON C

To record a program at the same time everyday

Press the NEXT button when all days of week indications are blinking.

If the day you want to record is more than 7 days ahead

Press the NEXT button when the desired day of week with the "2ND WEEK" indication is blinking.

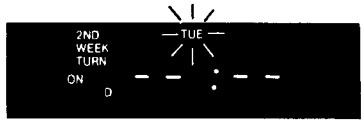

The 2ND WEEK in this case is different from next week on the calendar. The 2ND WEEK is the week which begins exactly seven days from the present day, at the present time.

Suppose you are setting the timer on this day at 10:00 a.m.

SUN	MON	TUE	WED	THU	FRI	SAT
	1	2	3	4	6	6
7	8	9	10	11	12	13
14	15	16	17	16	19	20
21	22	23	24	25	26	27
26	29	30	31			

2ND WEEK:
from 10:01 a.m. on 16th to 10:00 a.m. on 23rd.

4 Set the turn-on time.

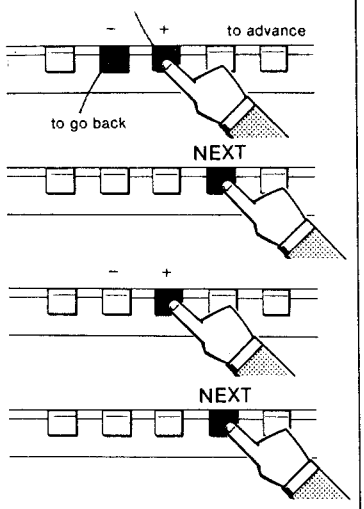

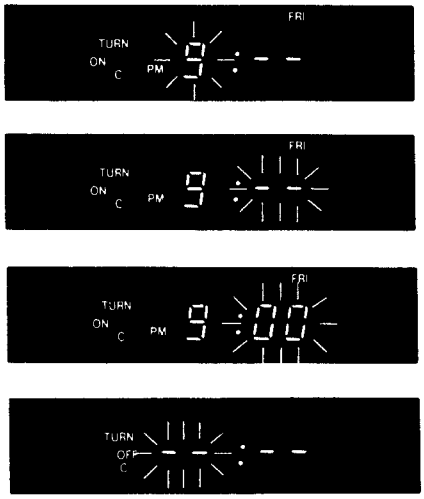

5 Set the turn-off time (within 24 hours from the turn-on time).

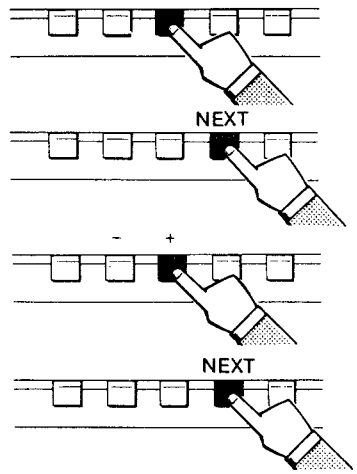

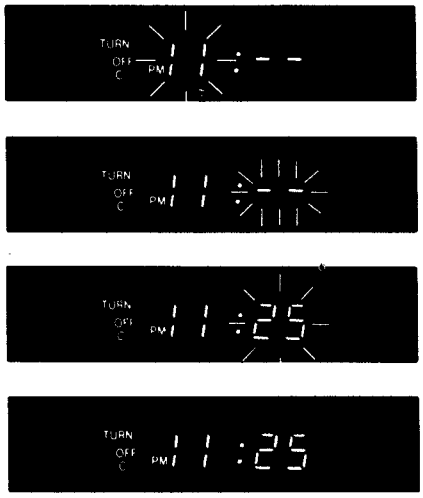

To record to the end of the tape
Set the turn-off time to a time after the tape will reach the end or to "--:--".

between PM 11 h. and AM 12 h.

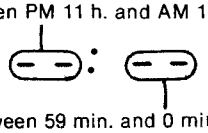

between 59 min. and 0 min.

When the tape reaches the end during the timer recording, the recording stops and the unit will be turned off automatically after about 30 seconds. In this case the tape will not be rewound to the beginning.

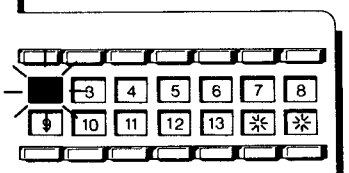

6 Select the channel to be recorded.

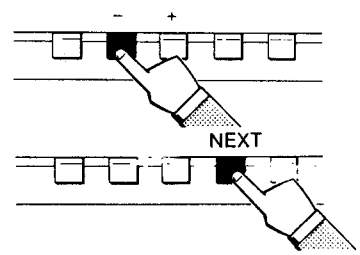

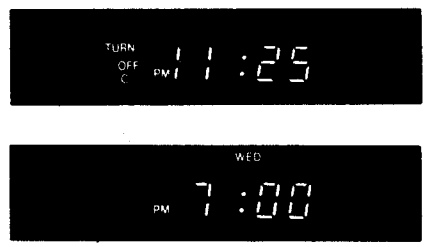

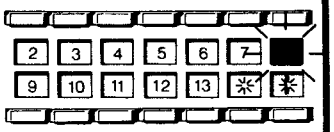

The present time is displayed and the unit is turned off.

Now Program C is set. To set Program A, B or D, repeat these steps. (The unit will be turned on when the TIMER SET button is depressed.)

7 After all the timer settings are finished

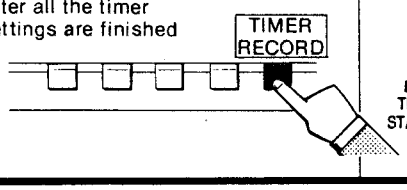

The red lamp will light up.

ONCE THE TIMER STANDBY LAMP HAS LIT UP, NO FUNCTION OF THE RECORDER CAN BE ACTIVATED, except for checking the timer setting.

At the preset turn-on time, recording will start automatically and will stop at the preset turn-off time.

TO OPERATE THE RECORDER AFTER THE TIMER HAS BEEN SET

Once the TIMER RECORD button has been pressed, the POWER switch on the recorder will not function.
This is to safeguard the timer recording.
To operate the recorder after the timer has been set, press the TIMER RECORD button again so that the TIMER STANDBY lamp goes off.
Also to stop the tape during timer recording, press the TIMER RECORD button so that the TIMER STANDBY lamp goes off.

- The timer settings are kept in the memory even if you disengage the TIMER RECORD button, so you can easily restore the setting later by pressing the TIMER RECORD button.

TO CHECK THE TIMER SETTING

Press the TIMER CHECK button. Each time you press the button, the indication will change as follows:

turn-on day and time of Program A → turn-off time →
turn-on day and time of Program B → turn-off time →
turn-on day and time of Program C → turn-off time →
turn-on day and time of Program D → turn-off time →
present time* (The unit will be turned off automatically).**

The indicator of the channel preset for the recording will light up at the same time the turn-on time of each progam is displayed, so that the channel can be checked. During timer recording, however, the channel for other timer programs cannot be checked.

Note: The timer setting cannot be checked during recordings other than a timer recording.

*To obtain a present time during the checking procedure, turn the unit off.
**During timer recording the unit will not be turned off even if you check the timer setting.

TO CLEAR THE TIMER SETTING

The memory of a timer program will be automatically erased when the recording of that program is finished. A setting for everyday will not be erased, of course.
If you want to skip the timer recording preset for everyday temporarily, press the TIMER RECORD button so that the TIMER STANDBY lamp goes off. To resume the timer standby mode of that program, press the button again.

If you want to erase the memory of a timer program, proceed as follows:

❶ Press the TIMER SET button as many times as required until the turn-on time or turn-off time of the program to be erased is displayed.

❷ Press the NEXT button.

❸ Press the + and − SELECT buttons simultaneously. The entire memory of this program will be erased.

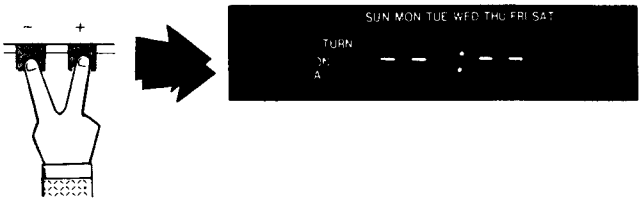

To display a present time, turn the unit off.

IF THE "ERROR" INDICATOR BLINKS

If the "ERROR" indicator blinks while the timer is being set
It means that the settings for the programs overlap.
Check the settings and eliminate the overlap.

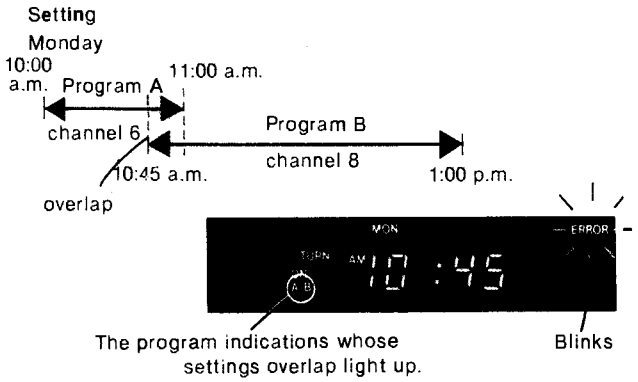

Realized recording

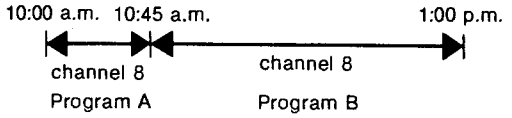

If the TIMER STANDBY lamp lights up, recording can be made even with the "ERROR" indicator blinking, but the program being recorded will change to the next one when the next turn-on time will come.

If the "ERROR" indicator blinks and the TIMER STANDBY lamp does not light when the TIMER RECORD button is pressed

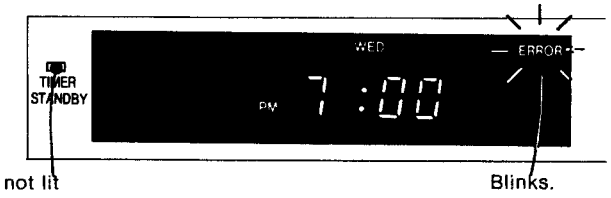

Check the following points:
- Did you insert a cassette into the recorder?
- Does the cassette inserted have a safety tab on the bottom?
- Make sure that the tape is not at its end.

After correcting the above points, press the NEXT button, then the TIMER RECORD button again.
Timer-activated recording cannot be activated if the TIMER STANDBY lamp does not light.

Notes on the "ERROR" indicator
The "ERROR" indicator does not light in the following cases, even if settings overlap.

— when the turn-off time of the program whose turn-on time is set earlier than the other one is set to "--:--".
Example:
Program A: Sun. 7:00 p.m. → "--:--" (to tape end)
Program B: Sun. 8:00 p.m. → 9:00 p.m.

— when one of the overlapping programs is set for next week and brackets the present time.
Examples:
Present time: Sun. 3:00 p.m.
Program A: Sun. 2:00 p.m. → 4:00 p.m.
(The program actually starts next Sunday.
Program B: Sun. of the 2nd week 3:30 p.m. → 5:00 p.m.

The ERROR indicator will light up and blink even if one timer program including the present time and another timer program do not actually overlap.
Examples:
Present time: Sun. 3:00 p.m.
Program A: Sun. 2:00 p.m. → 4:00 p.m.
(The program will actually start next Sunday.)
Program B: Sun. 3:30 p.m. → 5:00 p.m.
(The program will start that day.)

We recommend that you check the preset timer programs whenever you set a new timer program.

WHEN A POWER INTERRUPTION OCCURS

If the clock shows "SUN AM 12:00" and does not advance
all the timer settings have been erased. Reset the clock time and the timer settings.

If the clock still shows the correct time
the power has been interrupted for less than 10 minutes and the clock has been powered by the built-in self-charging battery so that the timer programs were kept in the memory. If the interruption occurs after the recording has begun, recording will be resumed when the power is restored.
- The built-in battery will be charged automatically when the ac power cord of the recorder is plugged into a wall outlet for at least 40 hours.

ADVANCED OPERATION
TO OBTAIN VARIABLE SPEED PLAYBACK PICTURES —"SWING SEARCH."—

With this video cassette recorder, you can obtain a freeze, a slow motion, a double speed, a frame-by-frame or a reverse playback picture as well as a normal speed playback picture.

For example ....
To closely inspect a particular frame ——→ FREEEZE PICTURE
To study your golf or tennis form →FRAME-BY-FRAME PICTURE
To watch a football play slowly unfold →SLOW-MOTION PICTURE
To quickly review a program ——→ DOUBLE-SPEED PICTURE

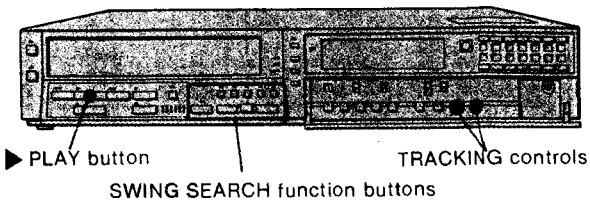

Notes
- **The audio cannot be monitored in the "Swing Search" mode.**
- **Tapes recorded in the [8] mode cannot be played back in the "Swing Search" mode.**
- **To resume normal playback when the unit is in the "Swing Search" mode, press the ▶ PLAY button.**

FREEZE PICTURE

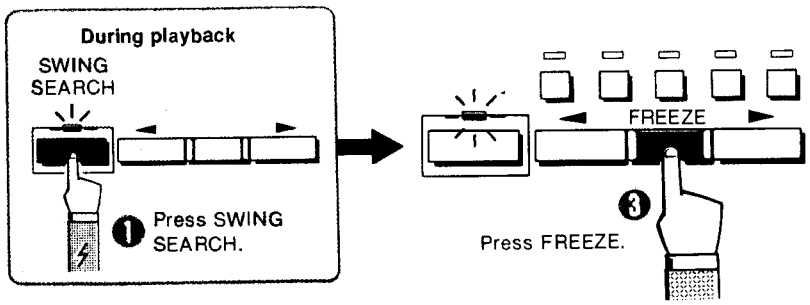

If a vertical jitter appears in the freeze, frame-by-frame or slow motion picture.

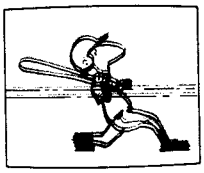

Obtain a freeze picture and adjust the TV VERT LOCK control at the rear of the recorder for the best possible picture. Then return the recorder to the previous mode.
- Once you adjust this control, you do not have to adjust it again unless you change the connected TV receiver.

FRAME-BY-FRAME PLAYBACK

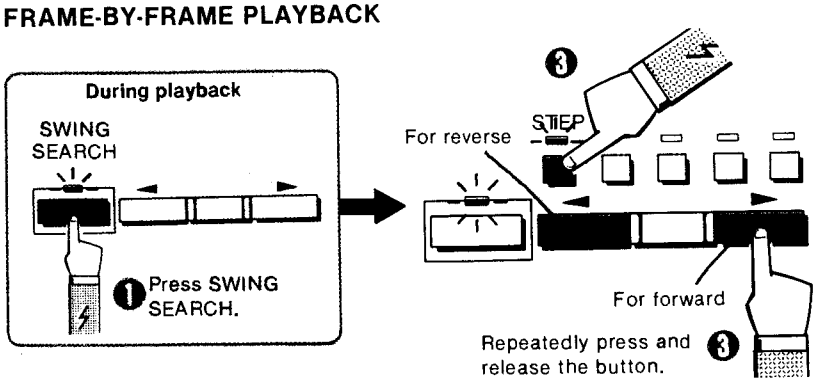

- Keep the button depressed for continuous frame-by-frame playback.

To remove the noise band in the freeze, frame-by-frame or slow motion picture.

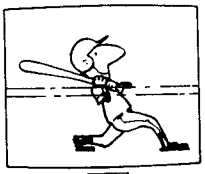

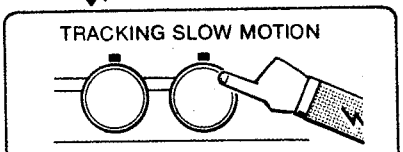

Obtain a slow motion pioture and adjust the control.
Return the recorder to the previous mode or continue in slow motion.

SLOW MOTION

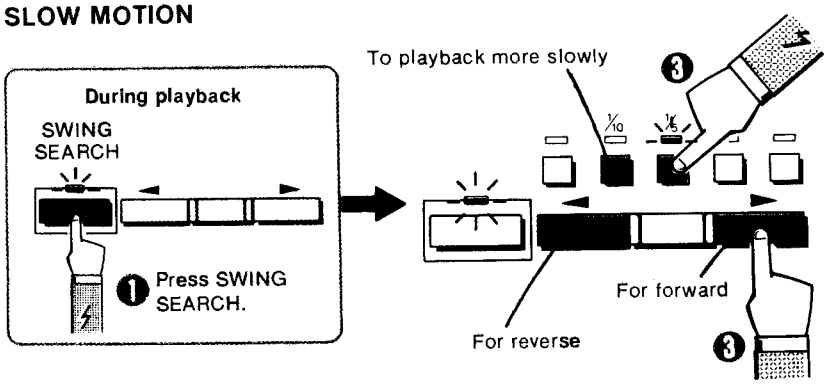

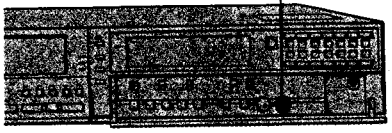

- Return the control to its original (dotted) position after the playback.

REVERSE PLAYBACK

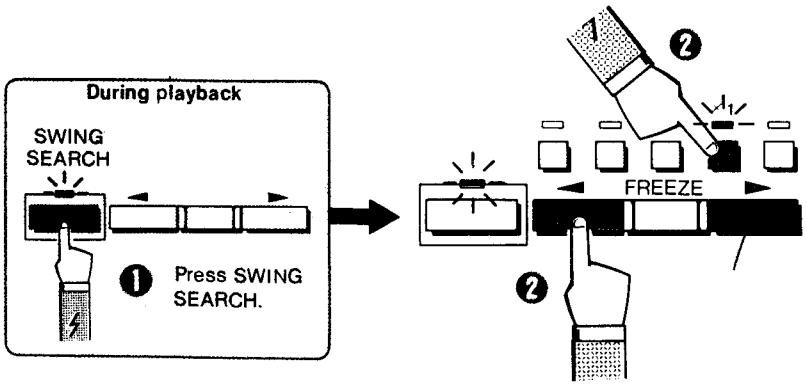

DOUBLE SPEED PICTURE

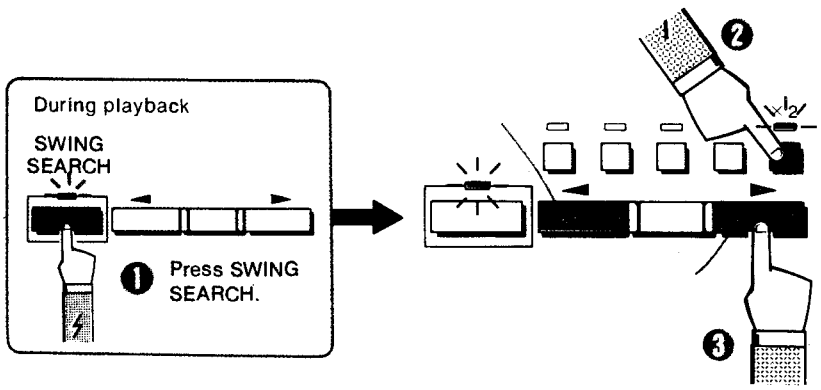

To remove the noise band in the reverse normal speed or the forward double speed picture

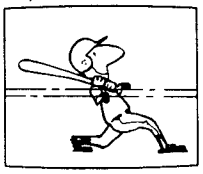

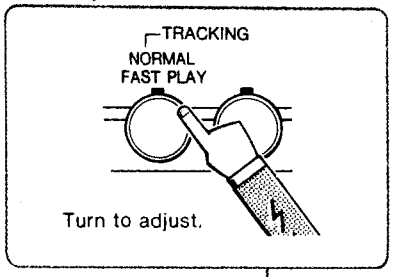

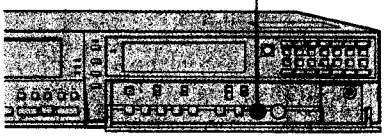

- The noise band in the reverse double speed picture cannot be removed.

Return the control to its original (dotted) position after the reverse normal speed or the forward double speed viewing.

BACK AND FORTH PLAYBACK

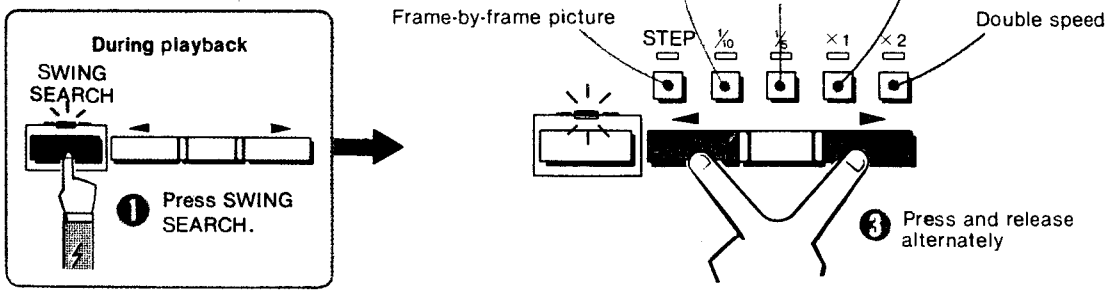

TAPE COPY

To duplicate a tape, you will need two video recorders; one is to play back the original tape and the other is to record.

❼ Connect the recorders as illustrated.
❼ Turn on both recorders.
❼ Insert the original cassette into the recorder for playback.
❼ Insert a blank cassette into the recorder for recording.
❼ Set the INPUT SELECT switch of the recorder for recording to LINE/PCM.
❼ Set the recorder for playback into the playback mode.
❼ Set the recorder for recording into the record mode.

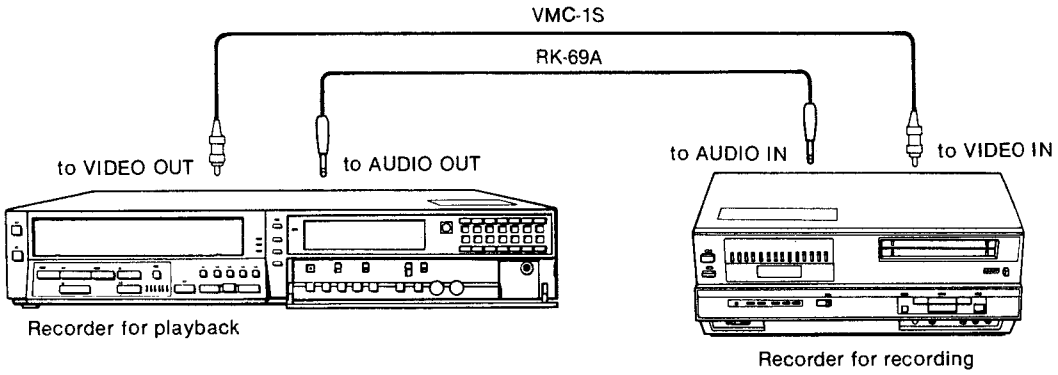

PCM RECORDING AND PLAYBACK

By connecting a PCM digital audio processor (Sony PCM-10, etc.) you can enjoy hi-fi sound reproduction with a wide dynamic range, minimal distortion and a flat frequency response.

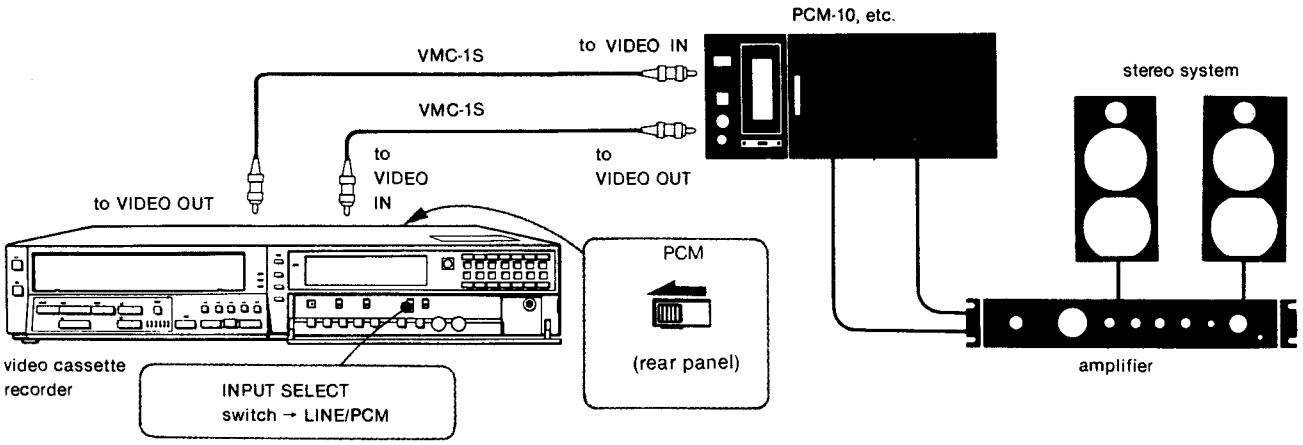

● For optimum results, use a video cassette with a model number L-500 or less (L-250, L-125, etc.) and set the RECORD MODE selector to **SII**.
● For details, refer to the instruction manual furnished with the digital audio processor.

DUBBING AUDIO

You can record a music or commentary track on any recorded tape.
You can dub the audio while watching the recorded picture.

Notes

- When a new sound track is recorded, the previously-recorded sound track will be erased, but the picture will remain.
- Audio dubbing cannot be done on a blank tape.

CONNECTIONS

To record microphone sound

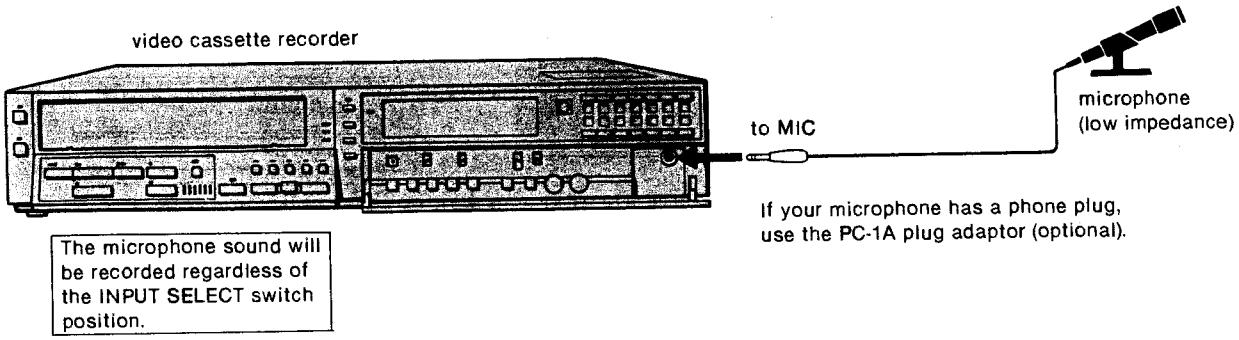

To record from an audio equipment

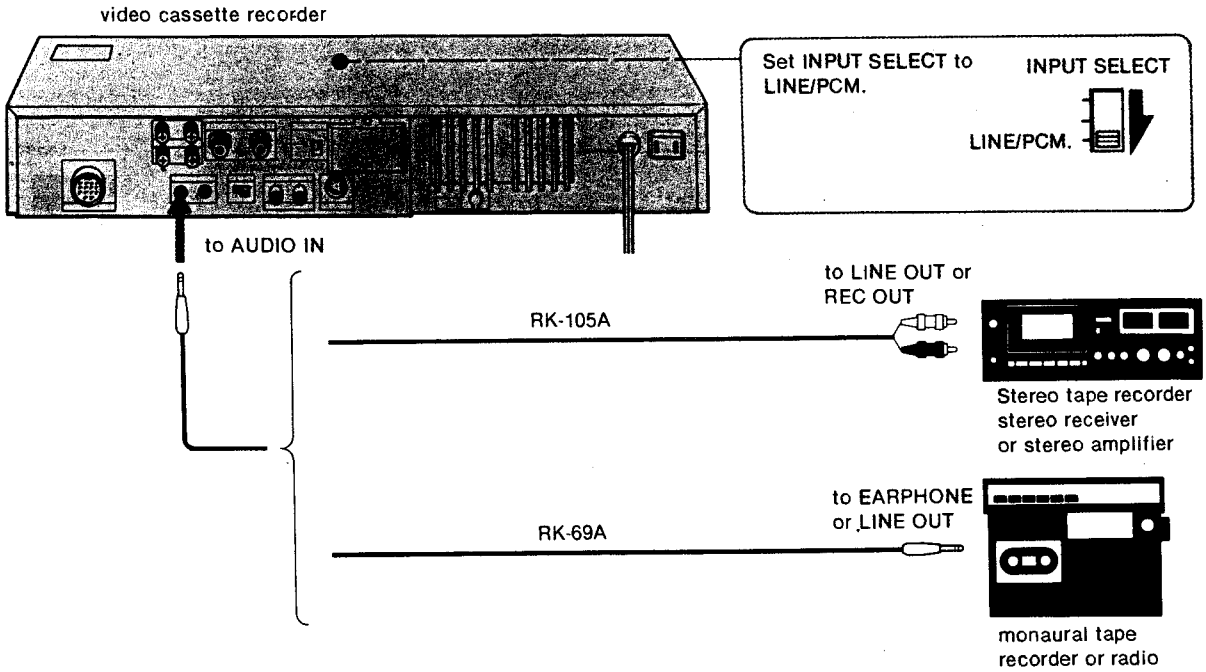

SECTION 2
DISASSEMBLY

2-1. Cabinet Removal

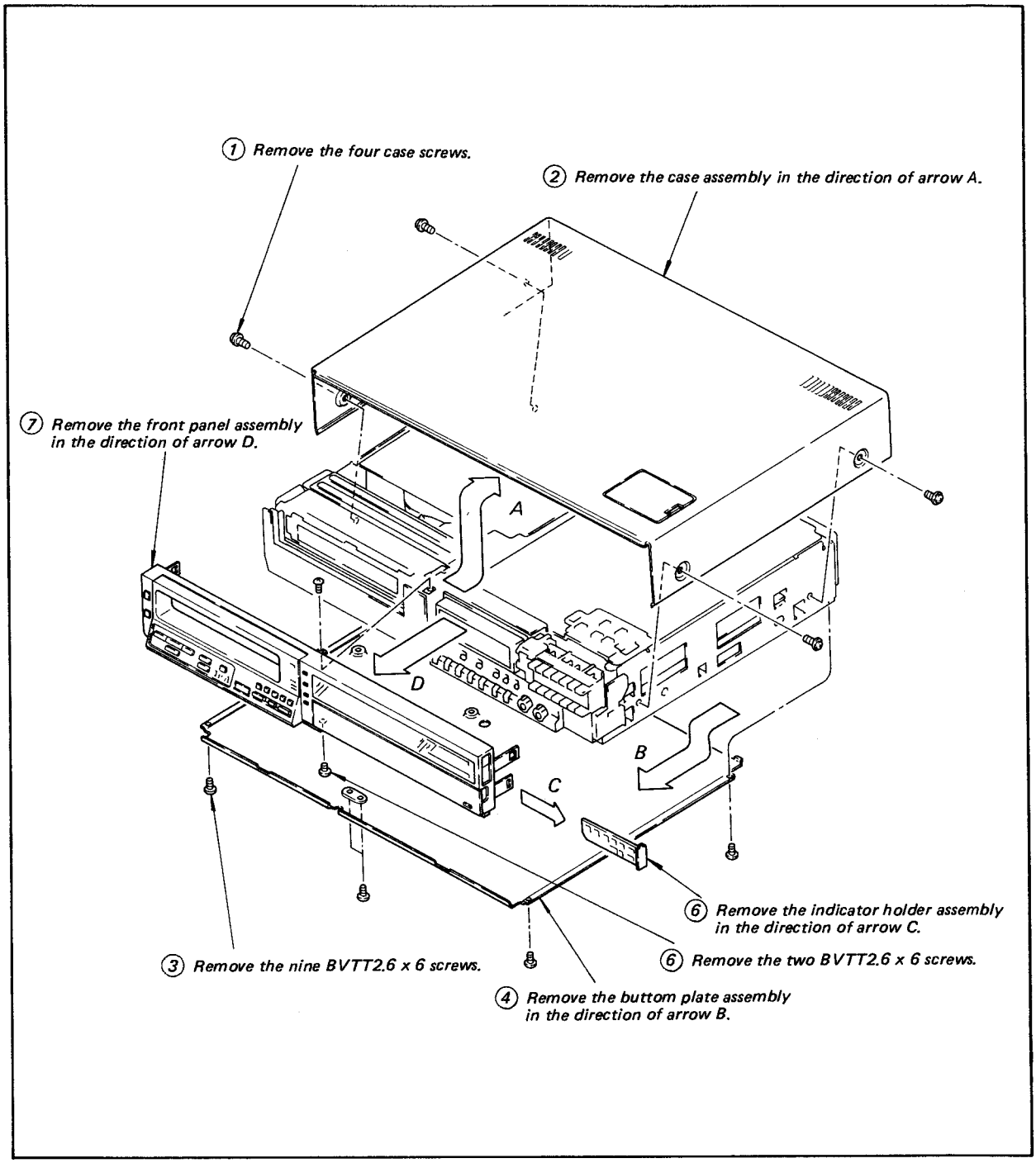

2-2. Opening RR-1A Board

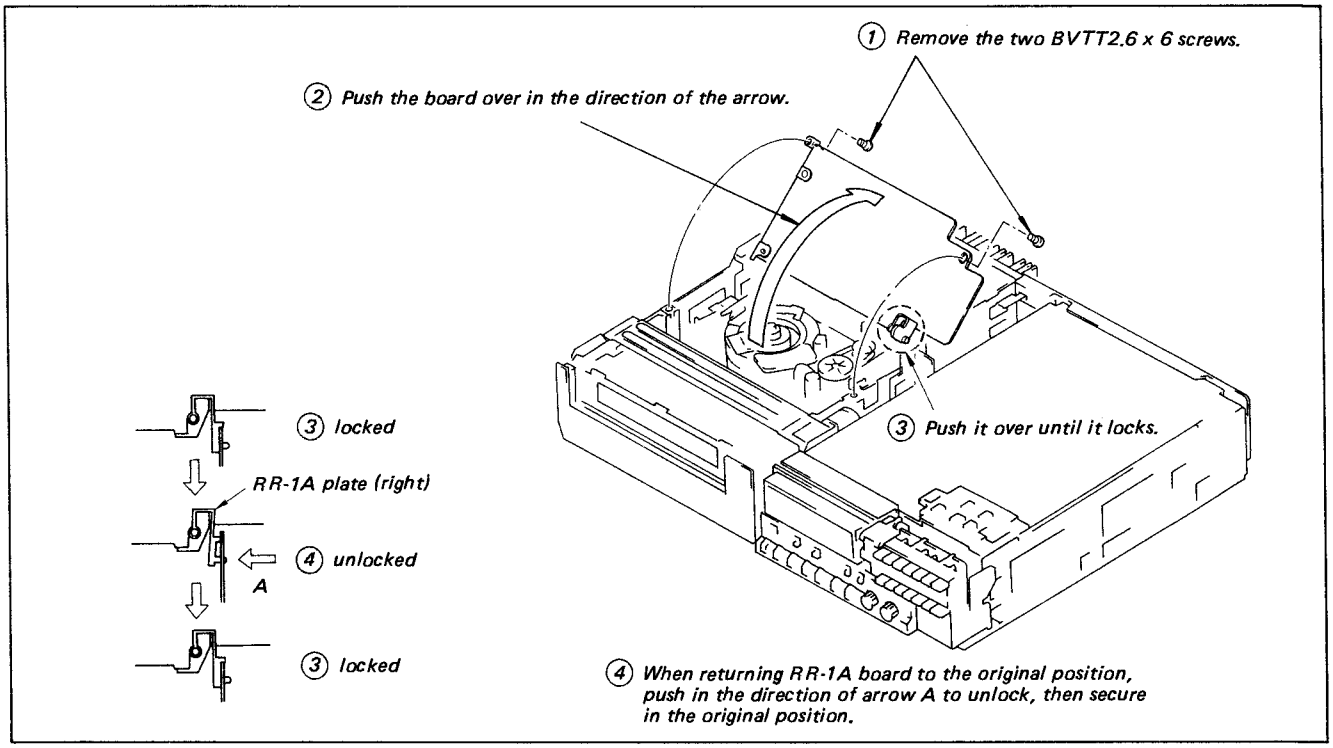

2-3. Removal of VL-3 Board

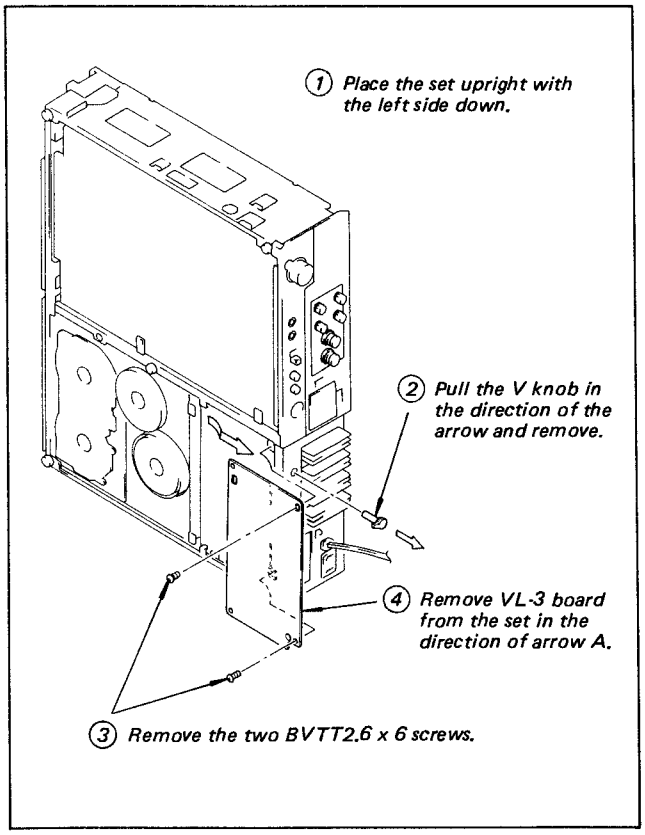

2-4. Opening TU-21, SS-10A Board

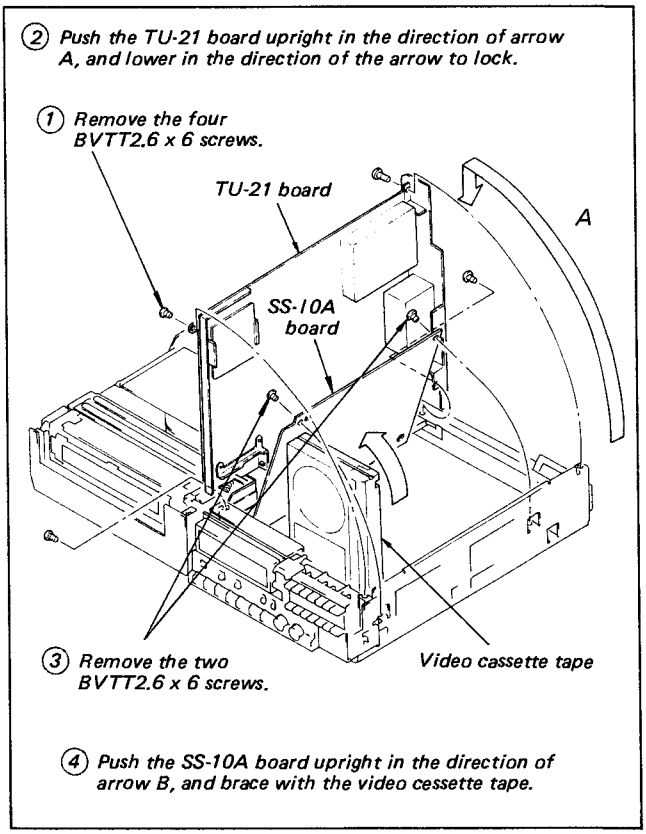

2-5. Opening TU-21, SS-10A, VA-3 and MI-2 Board (Check)

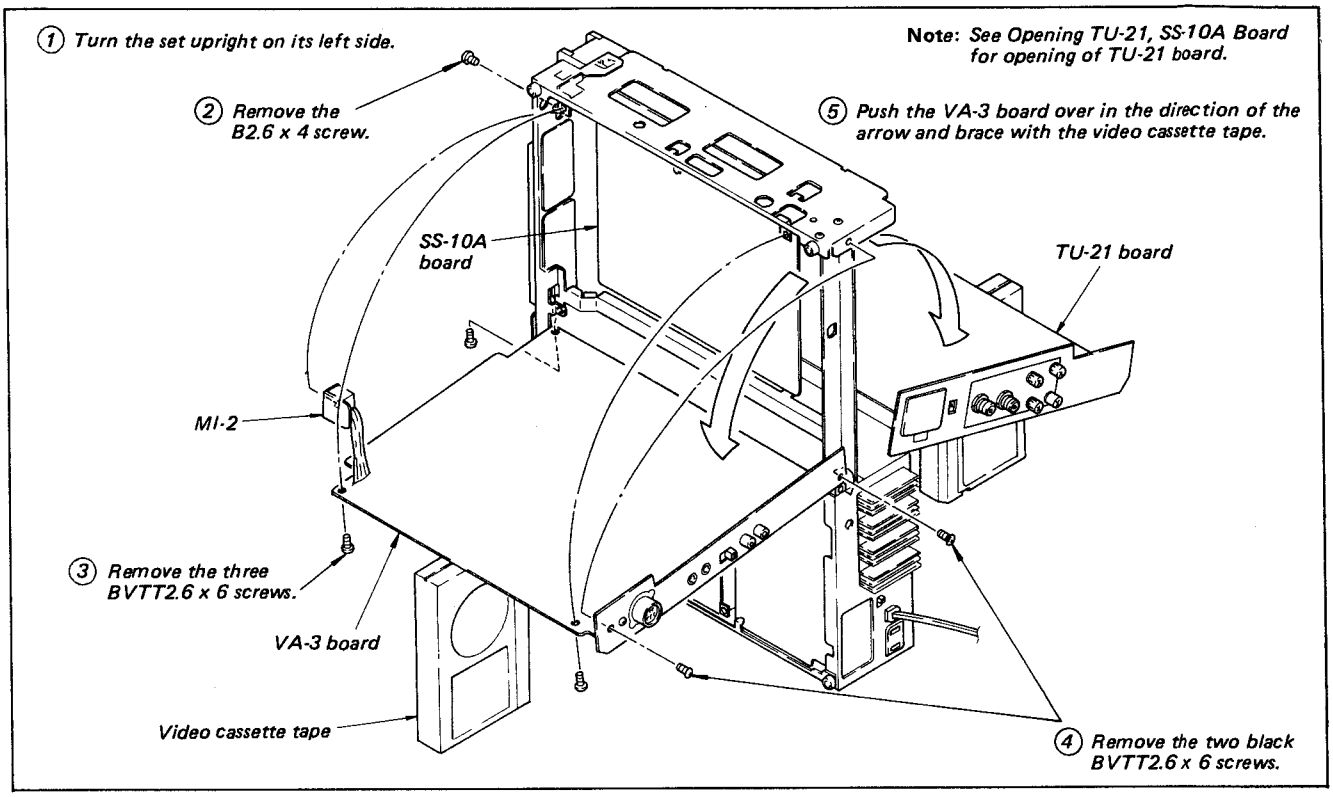

2-6. Tuner Removal

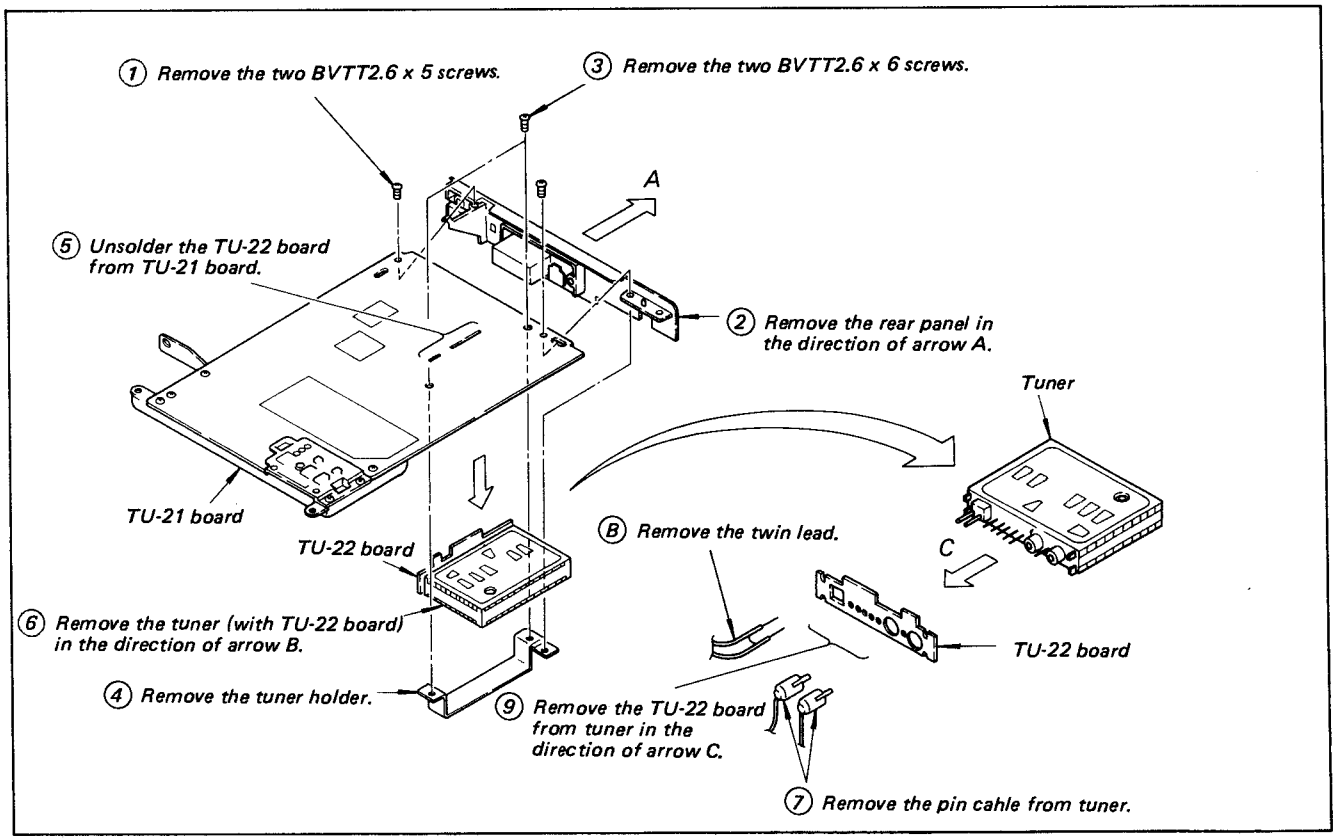

CIRCUIT BOARDS LOCATION

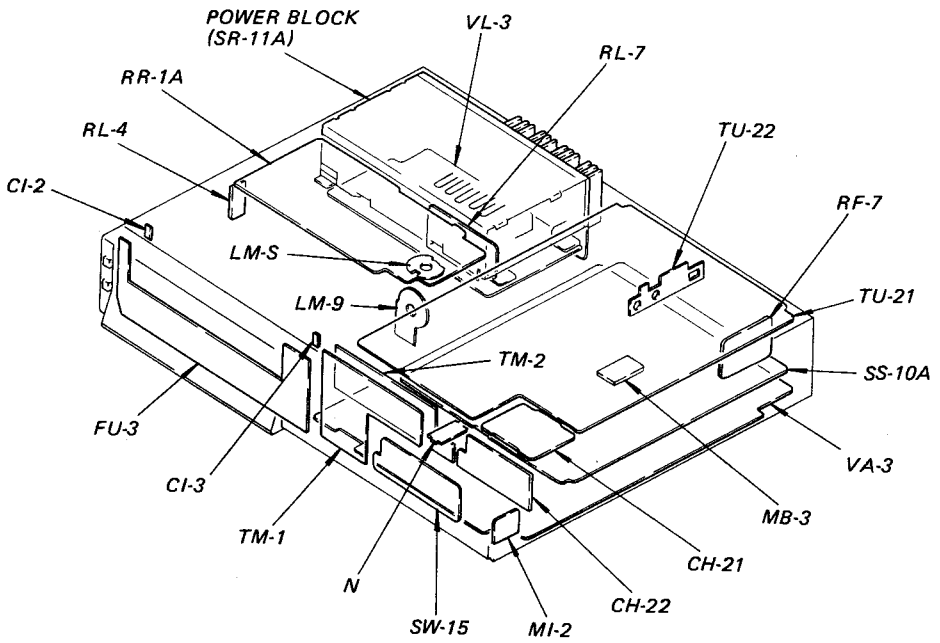

SECTION 3
BLOCK DIAGRAMS

OVERALL BLOCK DIAGRAM

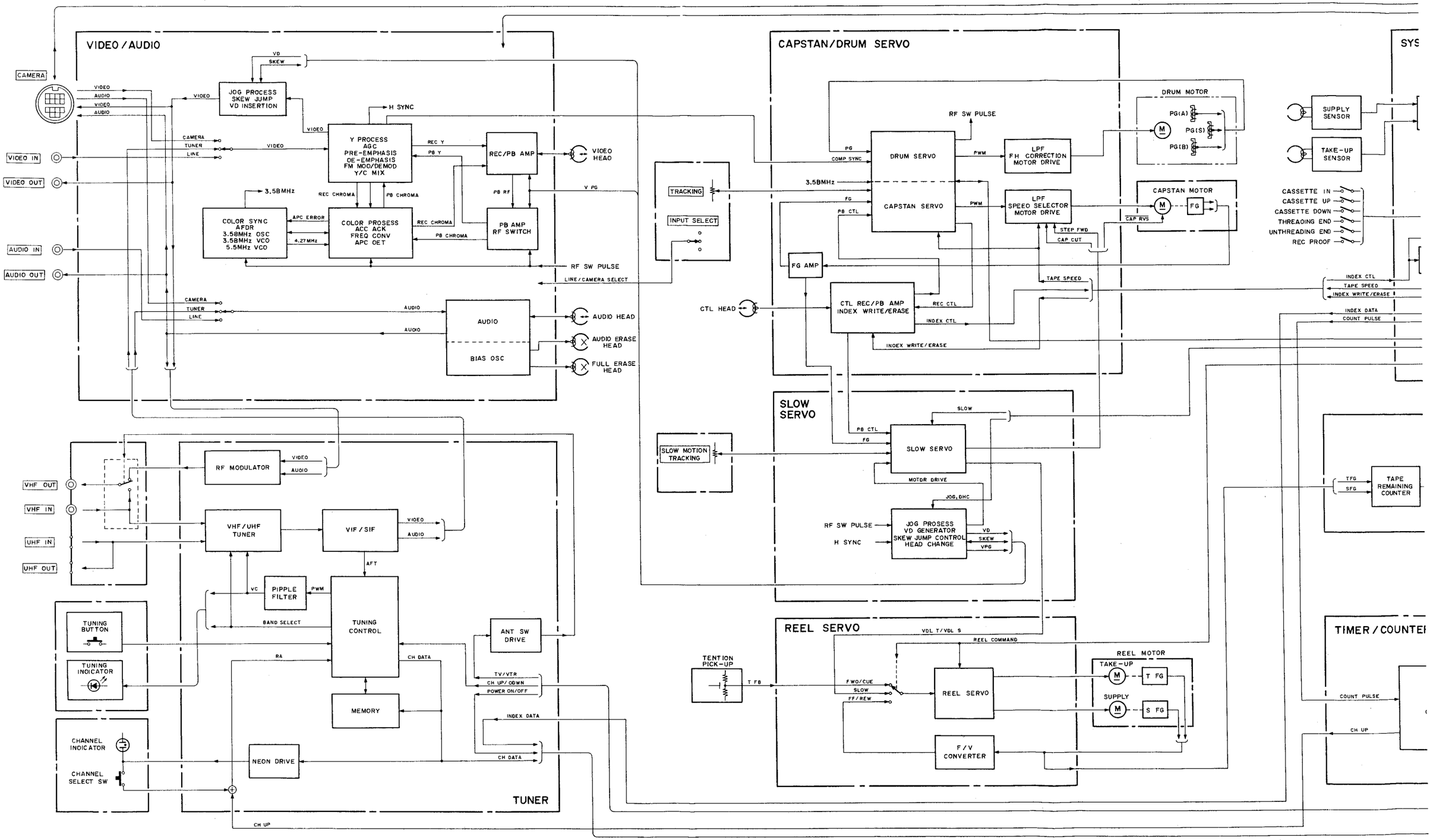

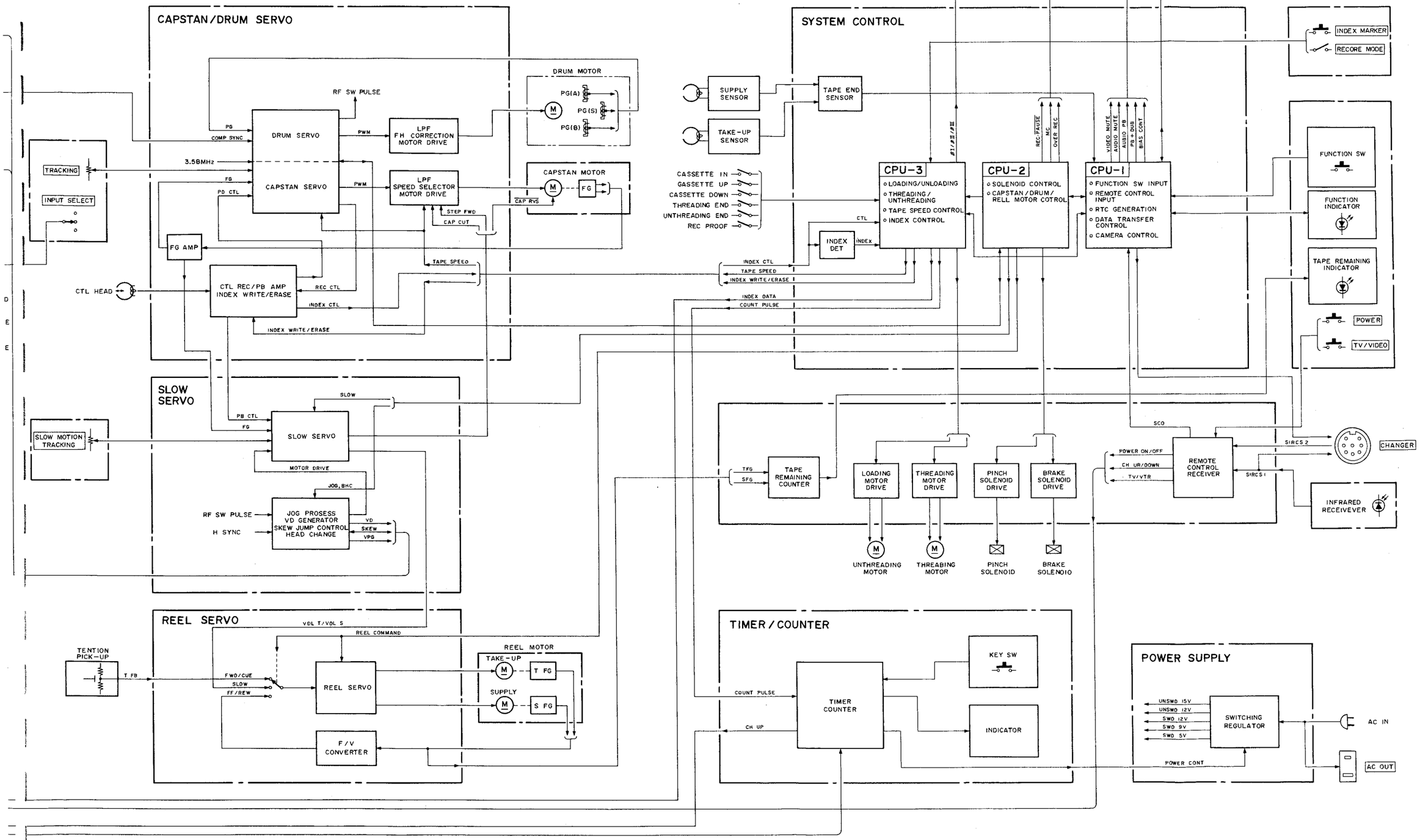
CAPSTAN/DRUM SERVO
DRUM MOTOR
RF SW PULSE
PG
COMP SYNC
DRUM SERVO
PWM
LPF
FH CORRECTION
MOTOR DRIVE
PG(A)
PG(S)
PG(B)
3.58MHz
TRACKING
INPUT SELECT
FG
PD CTL
CAPSTAN SERVO
PWM
LPF
SPEED SELECTOR
MOTOR DRIVE
CAPSTAN MOTOR
FG
CAP RVS
STEP FWD
CAP CUT
FG AMP
TAPE SPEED
CTL HEAD
CTL REC/PB AMP
INDEX WRITE/ERASE
REC CTL
INDEX CTL
INDEX WRITE/ERASE
SLOW
SERVO
SLOW
PB CTL
FG
SLOW MOTION
TRACKING
SLOW SERVO
MOTOR DRIVE
JOG, BHC
RF SW PULSE
H SYNC
JOG PROSESS
VD GENERATOR
SKEW JUMP CONTROL
HEAD CHANGE
VD
SKEW
VPG
REEL SERVO
VDL T/VDL S
REEL COMMAND
TENTION
PICK-UP
T FB
FWD/CUE
SLOW
FF/REW
REEL SERVO
REEL MOTOR
TAKE-UP
T FG
SUPPLY
S FG
F/V
CONVERTER
SYSTEM CONTROL
SUPPLY
SENSOR
TAKE-UP
SENSOR
TAPE END
SENSOR
CASSETTE IN
GASSETTE UP
CASSETTE DOWN
THREADING END
UNTHREADING END
REC PROOF
CTL
INDEX
INDEX
DET
CPU-3
LOADING/UNLOADING
THREADING/
UNTHREADING
TAPE SPEED CONTROL
INDEX CONTROL
CPU-2
SOLENOID CONTROL
CAPSTAN/DRUM/
REEL MOTOR CONTROL
CPU-1
FUNCTION SW INPUT
REMOTE CONTROL
INPUT
RTC GENERATION
DATA TRANSFER
CONTROL
CAMERA CONTROL
REC-PAUSE
MC
OVER REC
VIDEO MUTE
AUDIO MUTE
AUDIO PB
PB+DUB
BIAS CONT
INDEX MARKER
RECORE MODE
FUNCTION SW
FUNCTION
INDICATOR
TAPE REMAINING
INDICATOR
POWER
TV/VIDEO
INDEX CTL
TAPE SPEED
INDEX WRITE/ERASE
INDEX DATA
COUNT PULSE
TFG
SFG
TAPE
REMAINING
COUNTER
LOADING
MOTOR
DRIVE
THREADING
MOTOR
DRIVE
PINCH
SOLENOID
DRIVE
BRAKE
SOLENOID
DRIVE
SCO
POWER ON/OFF
CH UP/DOWN
TV/VTR
REMOTE
CONTROL
RECEIVER
SIRCS 2
SIRCS 1
CHANGER
INFRARED
RECEIVEVER
UNTHREADING
MOTOR
THREABING
MOTOR
PINCH
SOLENOID
BRAKE
SOLENOID
TIMER/COUNTER
KEY SW
COUNT PULSE
TIMER
COUNTER
CH UP
INDICATOR
POWER SUPPLY
UNSWD 15V
UNSWD 12V
SWD 12V
SWD 9V
SWD 5V
SWITCHING
REGULATOR
AC IN
AC OUT
POWER CONT

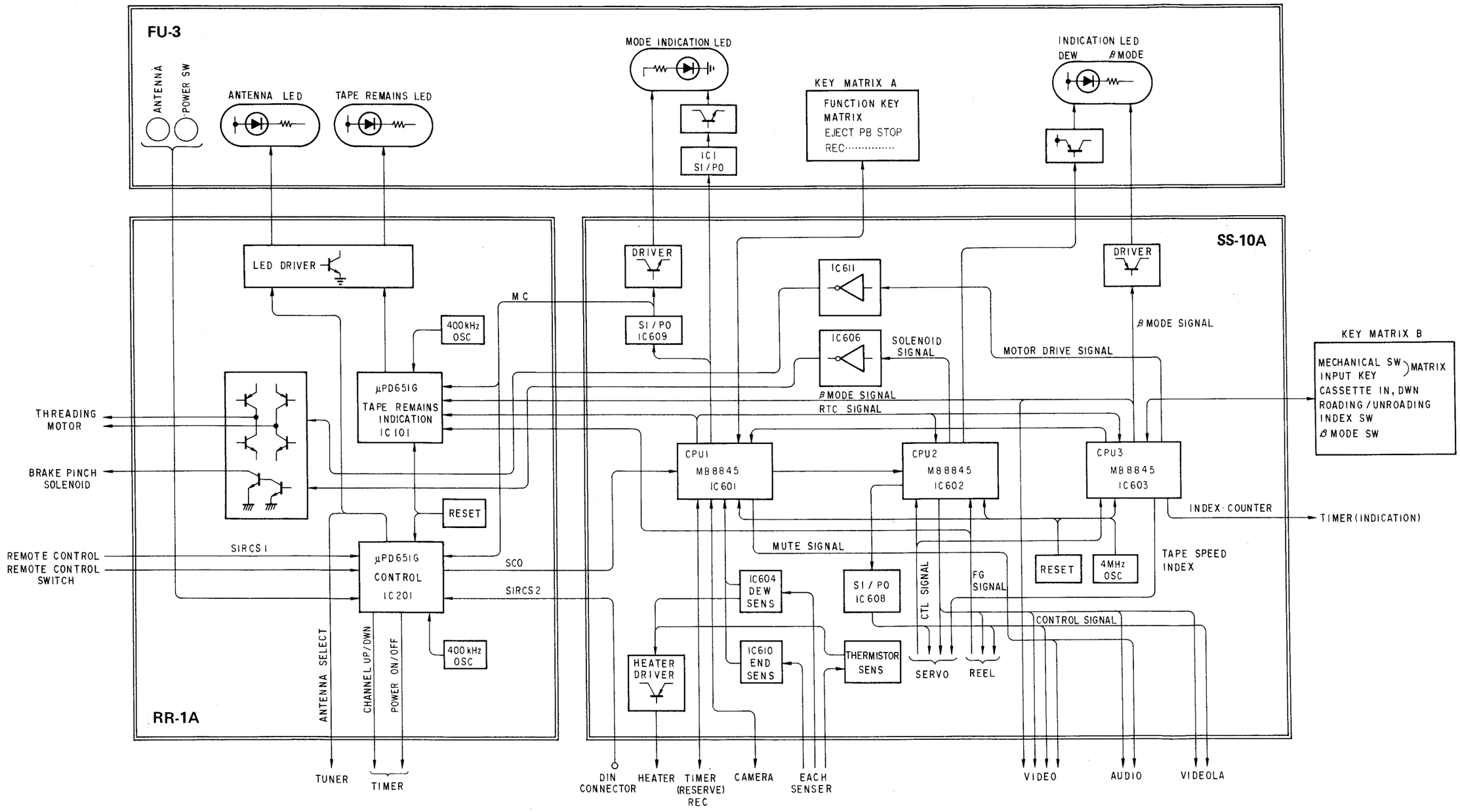
FU-3
ANTENNA
POWER SW
ANTENNA LED
TAPE REMAINS LED
MODE INDICATION LED
IC1
SI/PO
KEY MATRIX A
FUNCTION KEY
MATRIX
EJECT PB STOP
REC.....
INDICATION LED
DEW
βMODE
SS-10A
LED DRIVER
DRIVER
DRIVER
M C
400kHz
OSC
SI/PO
IC609
IC611
IC606
SOLENOID
SIGNAL
βMODE SIGNAL
MOTOR DRIVE SIGNAL
βMODE SIGNAL
RTC SIGNAL
KEY MATRIX B
MECHANICAL SW
INPUT KEY
MATRIX
CASSETTE IN, DWN
ROADING/UNROADING
INDEX SW
βMODE SW
THREADING
MOTOR
BRAKE PINCH
SOLENOID
μPD651G
TAPE REMAINS
INDICATION
IC101
CPU1
M88845
IC601
CPU2
M88845
IC602
CPU3
M88845
IC603
INDEX COUNTER
TIMER(INDICATION)
RESET
REMOTE CONTROL
REMOTE CONTROL
SWITCH
SIRCS1
μPD651G
CONTROL
IC201
SCO
SIRCS2
MUTE SIGNAL
IC604
DEW
SENS
SI/PO
IC608
CTL SIGNAL
FG
SIGNAL
RESET
4MHz
OSC
TAPE SPEED
INDEX
CONTROL SIGNAL
400kHz
OSC
HEATER
DRIVER
IC610
END
SENS
THERMISTOR
SENS
SERVO
REEL
RR-1A
ANTENNA SELECT
CHANNEL UP/DWN
POWER ON/OFF
TUNER
TIMER
DIN
CONNECTOR
HEATER
TIMER
(RESERVE)
REC
CAMERA
EACH
SENSER
VIDEO
AUDIO
VIDEOLA

SYSTEM CONTROL BLOCK DIAGRAM (1)

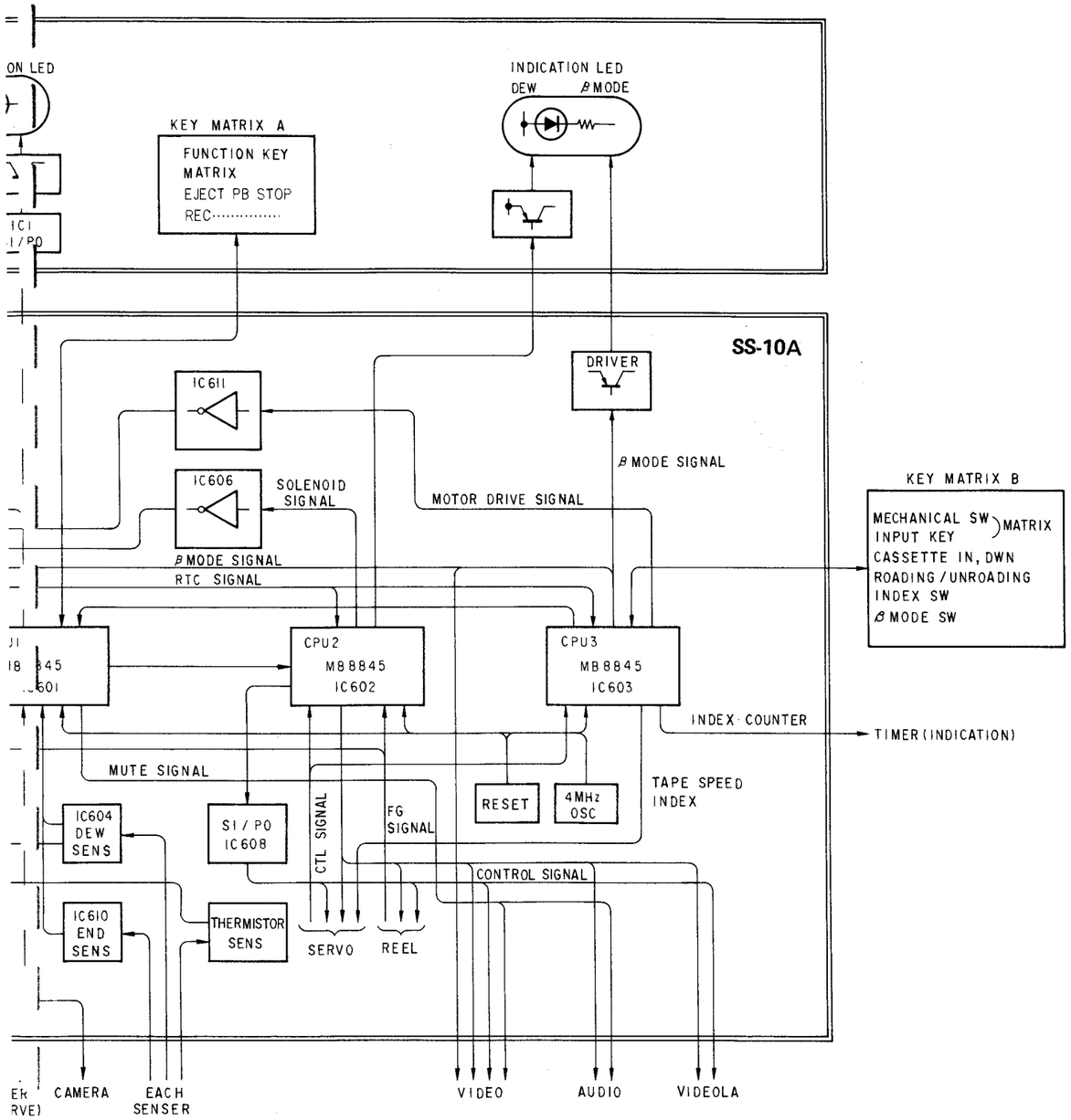

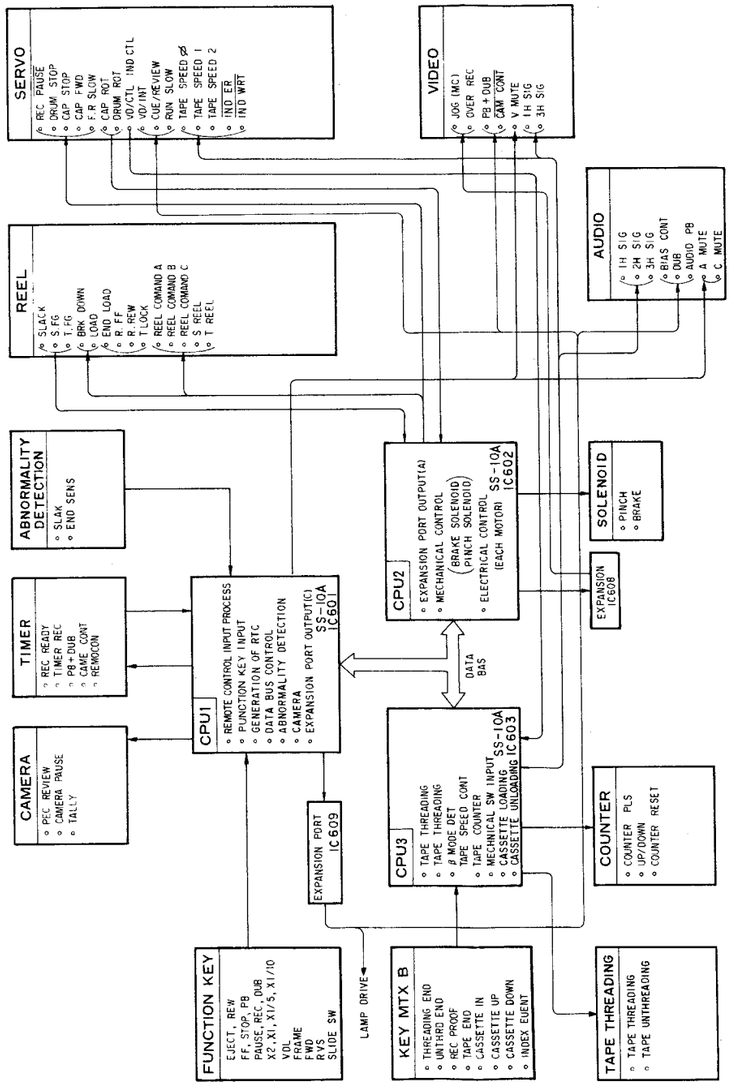

SYSTEM CONTROL CIRCUIT AND MECHANISM INTERFACE

SIGNAL \ MODE	I/O	Pin No.
BRAKE PLUNGER ON*1	O	CN621-5
BRAKE PLUNGER OFF*1	O	CN621-4
PINCH PLUNGER ON*1	O	CN621-3
PINCH PLUNGER OFF*1	O	CN621-2
THREADING MOTOR (+)*1	O	CN621-6
THREADING MOTOR (–)*1	O	CN621-7
CASSETTE LOADING MOTOR (+)	O	CN621-8
CASSETTE LOADING MOTOR (–)	O	CN621-9
REC PROOF SW (A)*2	I	CN615-4 CPU3 16 Pin (K3)
REC PROOF SW (B)*2	O	CN515-3 CPU3 29 Pin (P1)
CASSETTE IN SW (A)*2	I	CN616-4 CPU3 13 Pin (K0)
CASSETTE IN SW (B)*2	O	CN616-1 CPU3 29 Pin (P1)
CASSETTE DWN SW A	I	CN616-2
CASSETTE DWN SW B	O	CN616-1
CASSETTE UP SW A	I	CN516-3
CASSETTE UP SW B	O	CN616-1
LOADING END SW (A)*2	I	CN615-4 CPU3 16 Pin (K3)
LOADING ENO SW (B)*2	O	CN615-1 CPU3 32 Pin (P3)
UNLOADING END SW (A)*2	I	CN615-4 CPU3 16 Pin (K3)
UNLOAOING END SW (B)*2	O	CN615-2 CPU3 31 Pin (P2)
S SENSOR OUT*4	I	CN604-6 IC609 (H42) 7 Pin
T SENSOR OUT*5	I	CN604-5 IC609 (H42) 3 Pin

* 1 control signal for brake solenoid, pinch roller solenoid and threading motor
* 2 key matrix signal
* 3 when detecting dew
* 4 osc freq 600 kHz at tape end
* 5 osc freq 600 kHz at tape end

SYSTEM CONTROL CIRCUIT AND TUNER CIRCUIT INTERFACE

SIGNAL *1 \ MODE	I/O	Pin No.	STOP	PB	REC	FF	REW	CUE	REV	PB PAUSE	REC PAUSE	THREADING	EJECT	DUB	DUB PAUSE
REC·$\overline{\text{PAUSE}}$	O	CN620-5	L	L	H	L	L	L	L	L	L	L	L	L	L
INDEX (3) *2	O	CN620-4 CPU3 40 Pin ($\overline{O}7$)													
INDEX (2)	O	CN620-3 CPU3 39 Pin ($\overline{O}6$)													
INDEX (1)	O	CN620-3 CPU3 38 Pin ($\overline{O}5$)													
INDEX (0)	O	CN620-1 CPU3 37 Pin ($\overline{O}4$)													

* 1 Signal is correspond to connector (refer to Pin No.)
* 2 $\underbrace{0_H \sim 9_H}_{4\text{ bit-binary}}$, Index indication, E_H: "IND" Flash, F_H: "IND", "□" Lamp OFF, when power is OFF, Tuner block side is no use signal.

CAPSTAN PHASE SYSTEM TIMING CHART (REC)

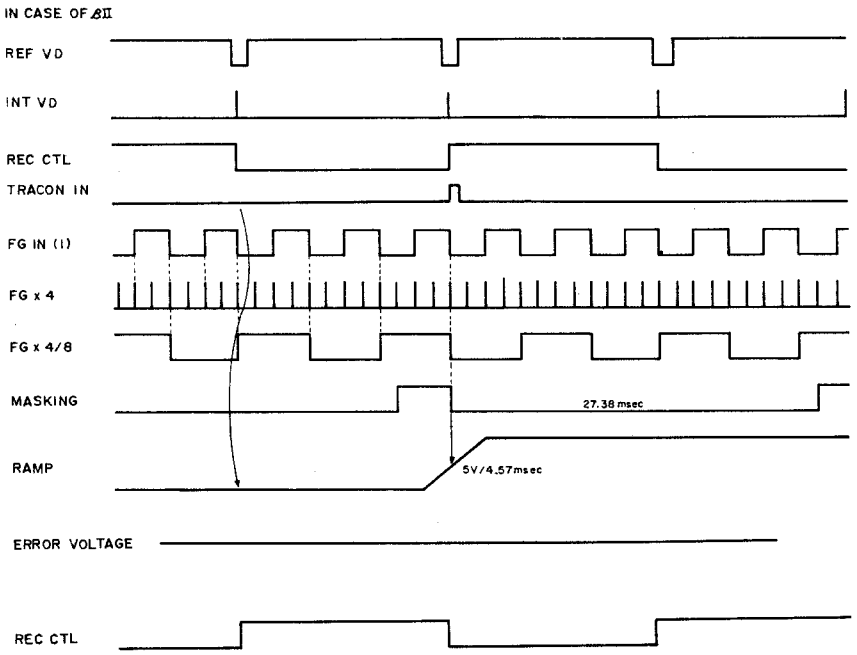

CAPSTAN PHASE SYSTEM TIMING CHART (PB)

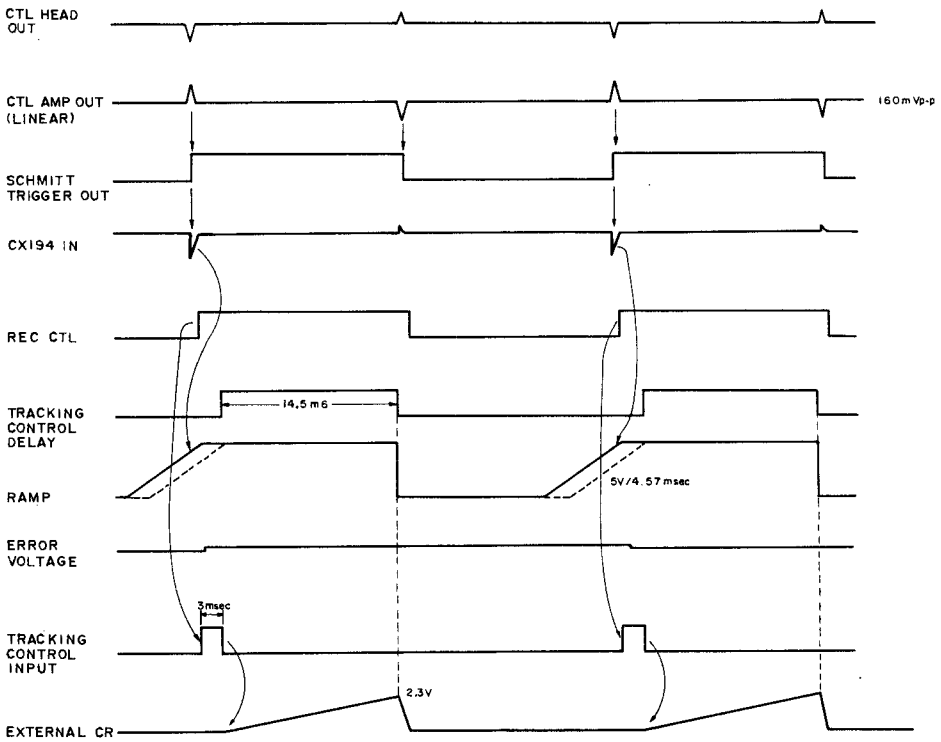

CAPSTAN SPEED SYSTEM TIMING CHART

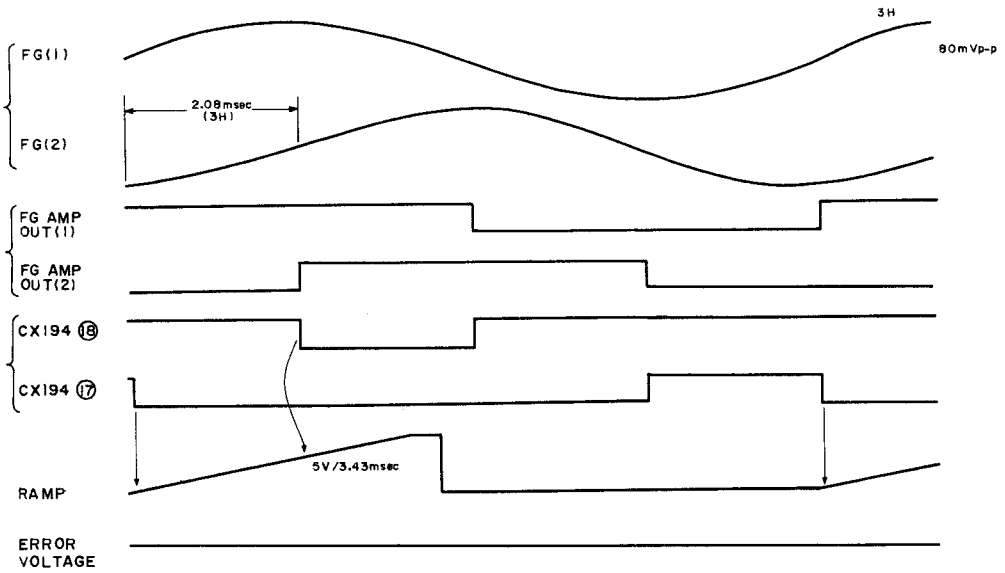

DRUM PHASE SYSTEM TIMING CHART

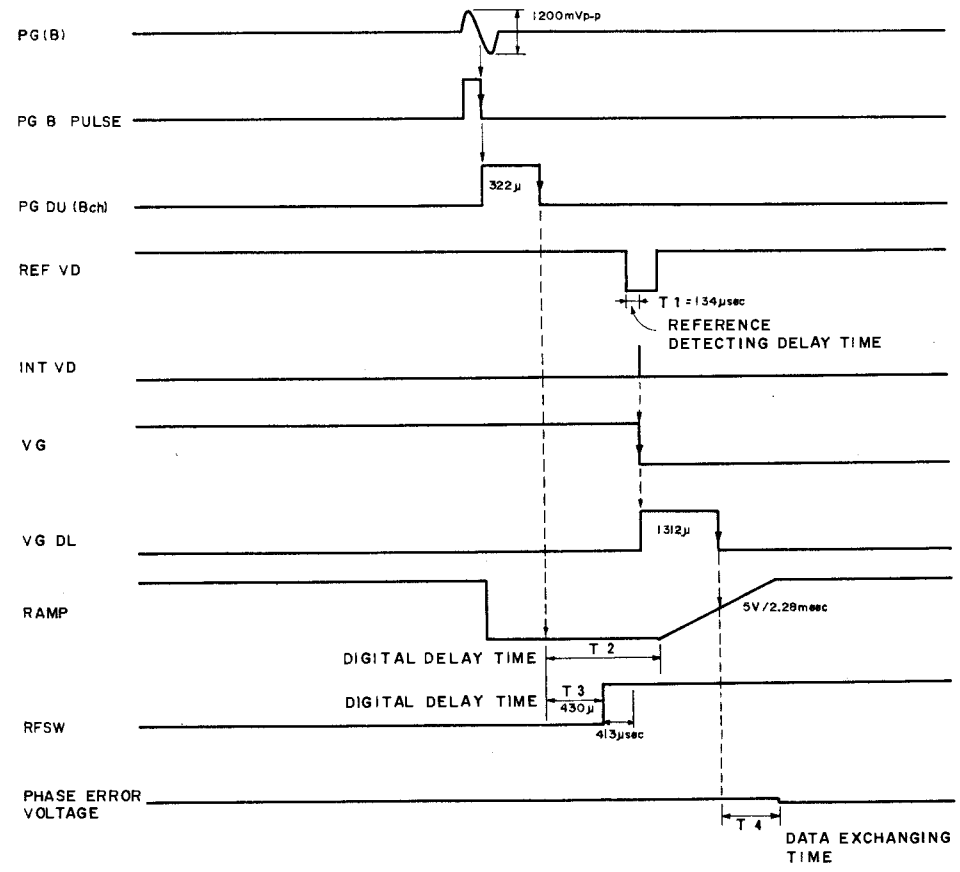

INSTRUMENTATION COUNTER TIMING CHART

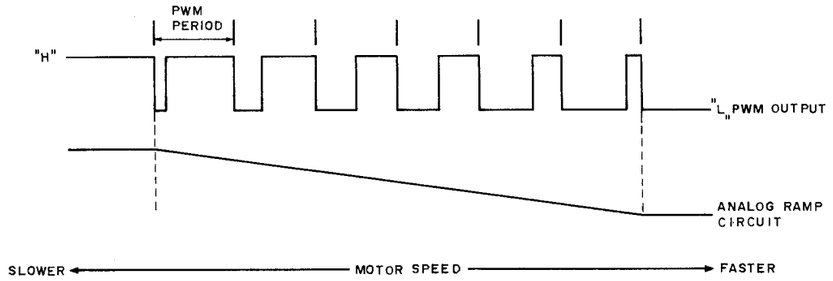

DRUM SPEED SYSTEM TIMING CHART

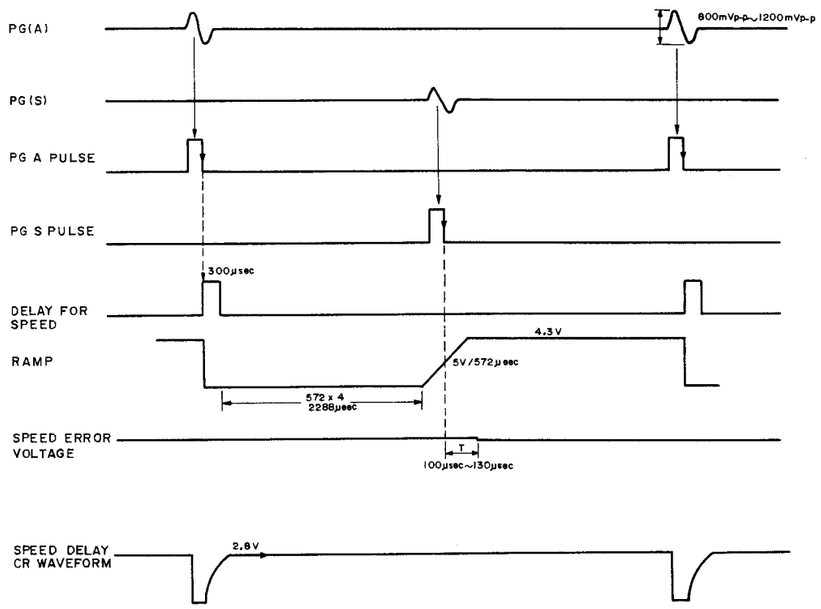

FG CIRCUIT TIMING CHART

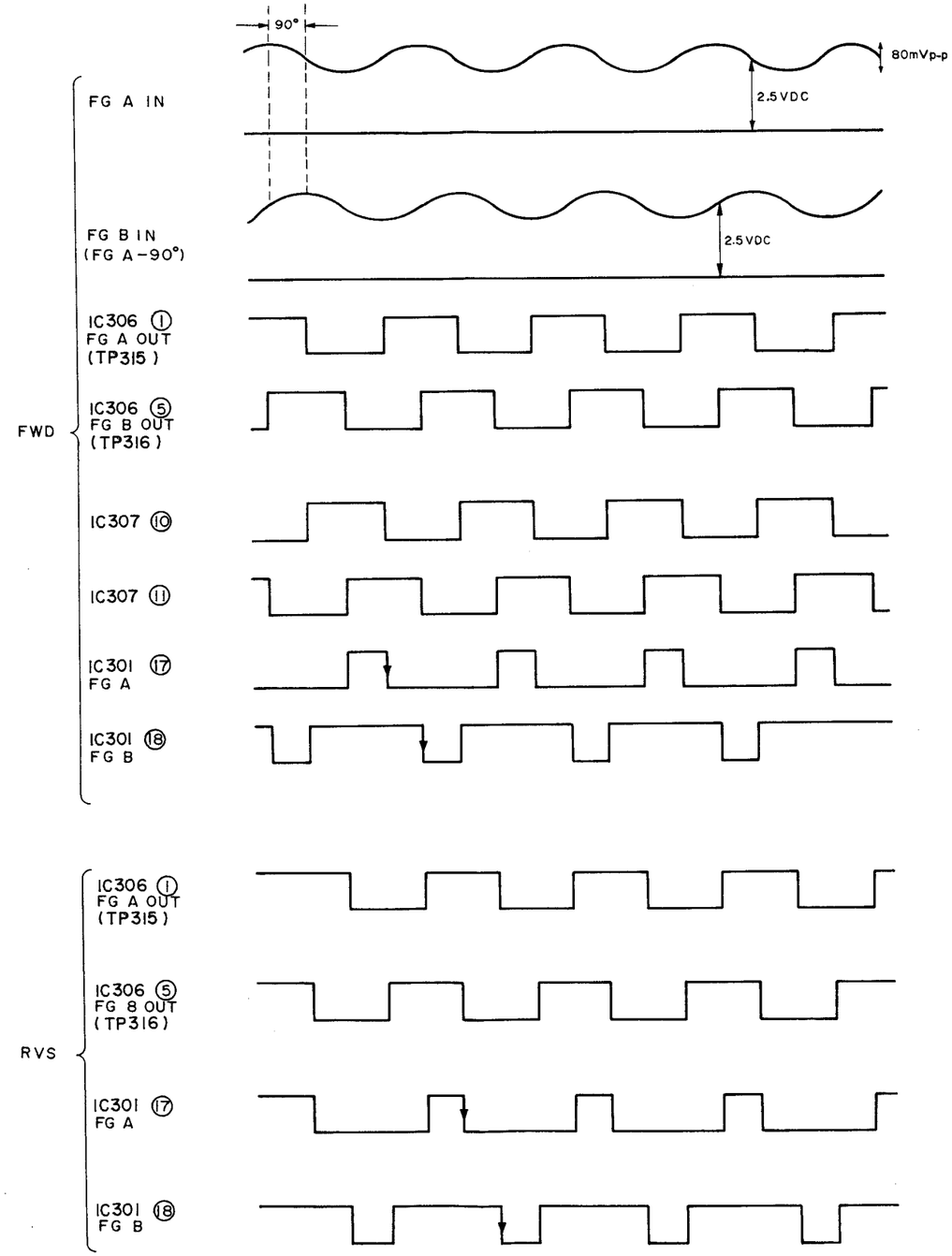

PG-A, PG-B, PG-S TIMING CHART

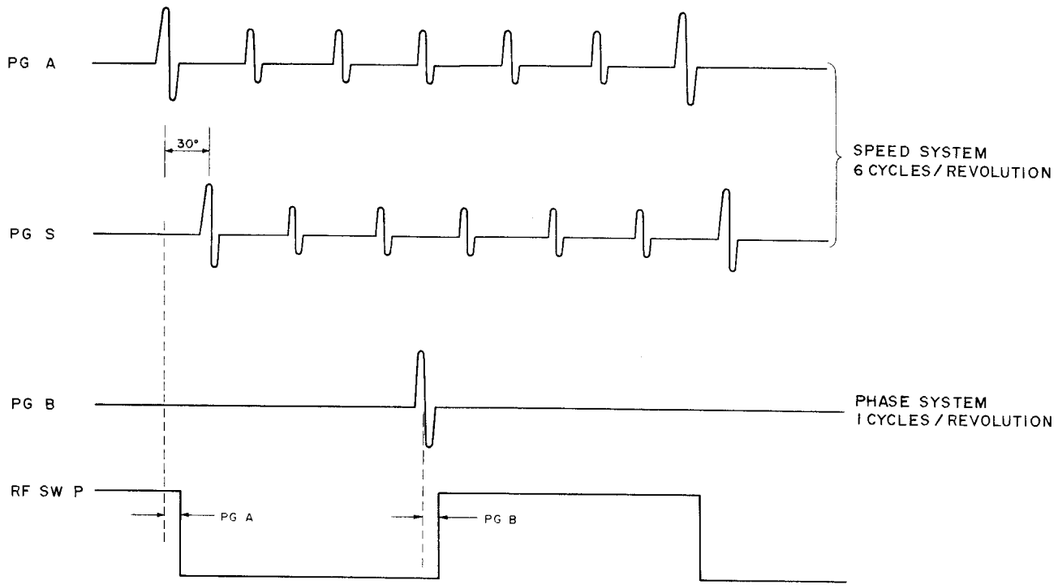

PG-A, PG-S TIMING CHART (REC/PB)

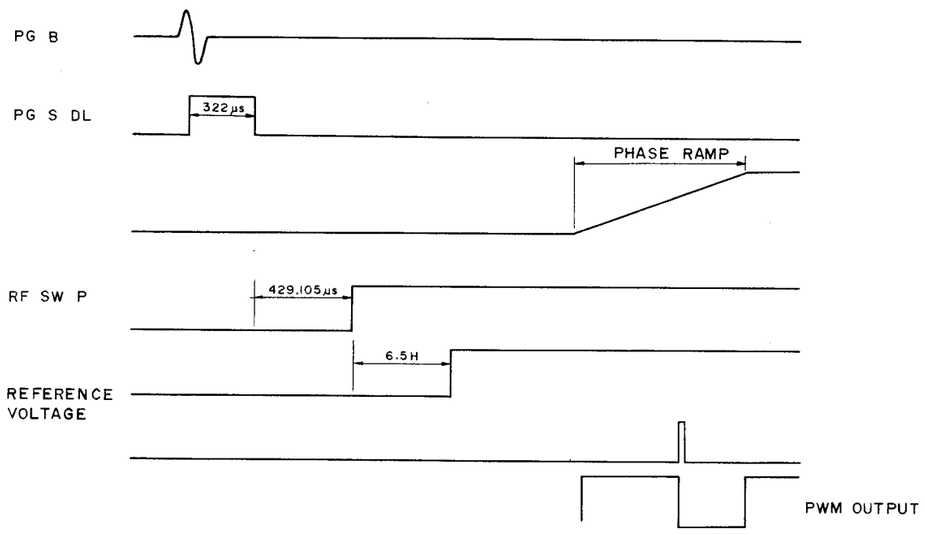

CTL CIRCUIT OF IC409 TIMING CHART

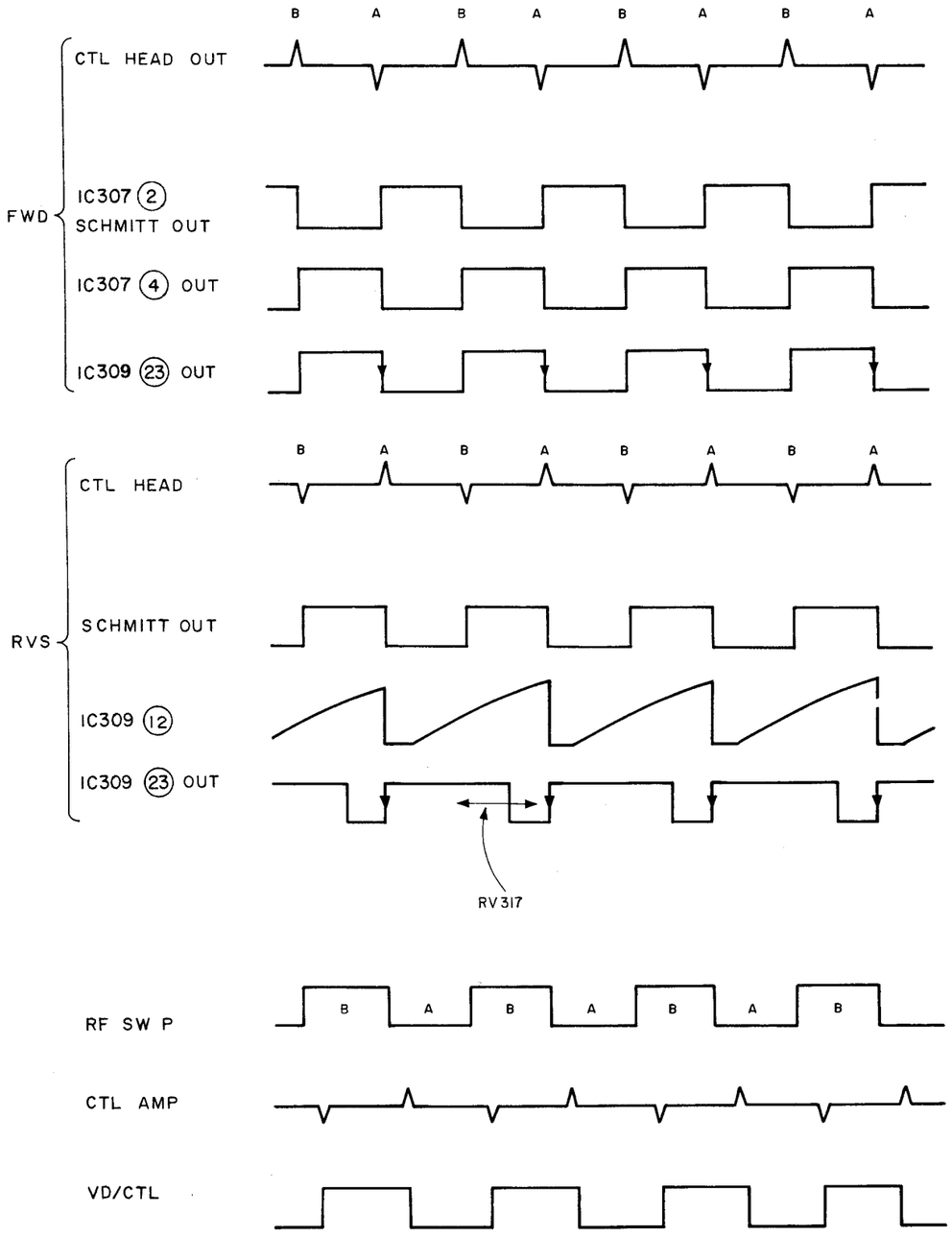

SWING SEARCH SERVO TIMING CHART (1)

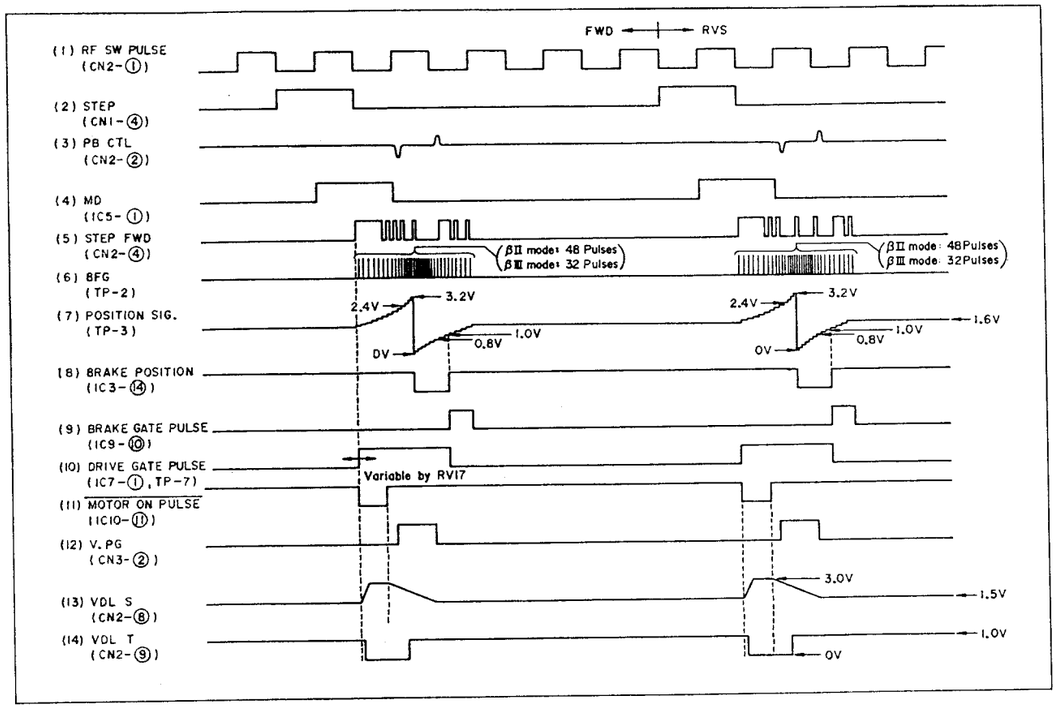

SWING SEARCH SERVO TIMING CHART (2)

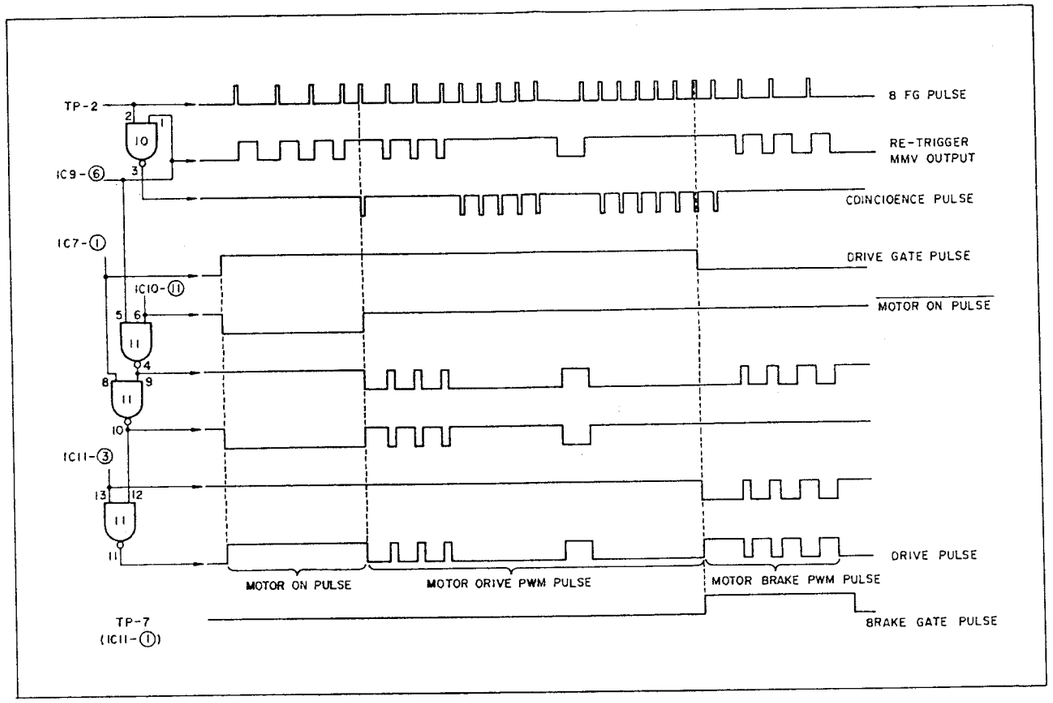

SWING SEARCH SERVO TIMING CHART (2)

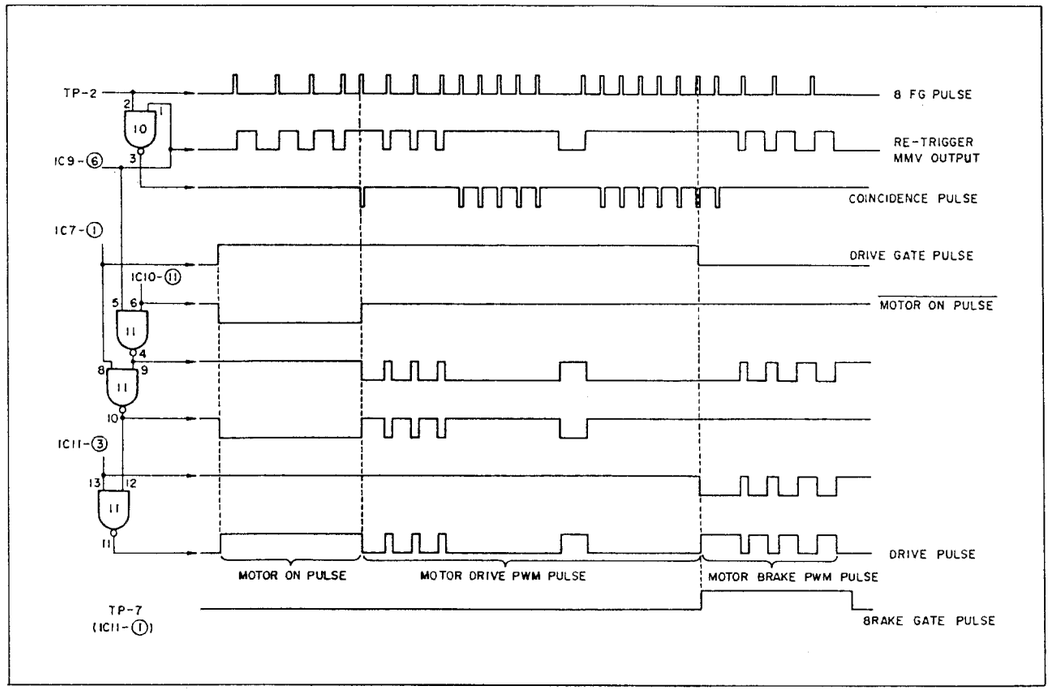

SWING SEARCH SERVO BLOCK DIAGRAM

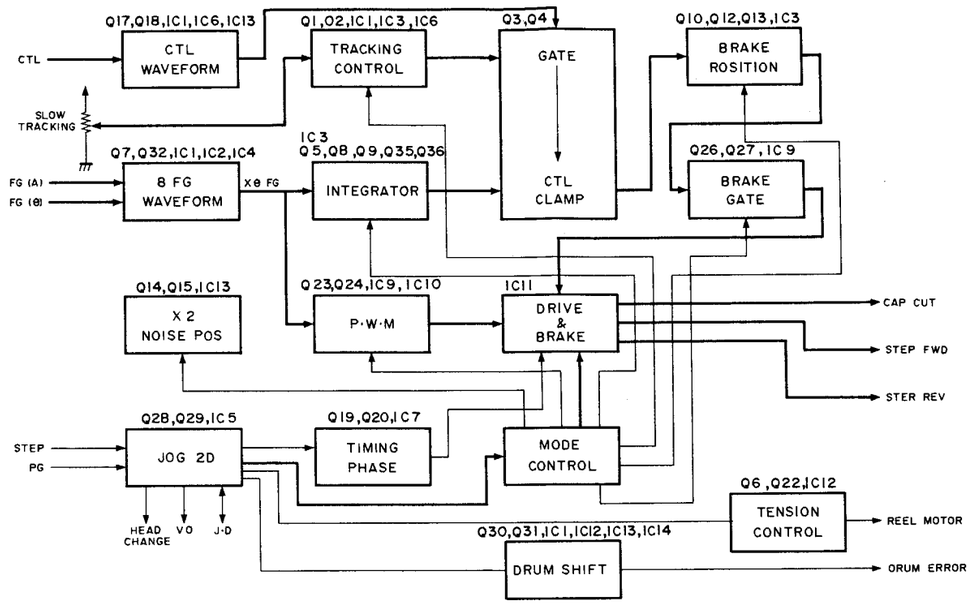

SWING SEARCH SERVO TIMING CHART (3)

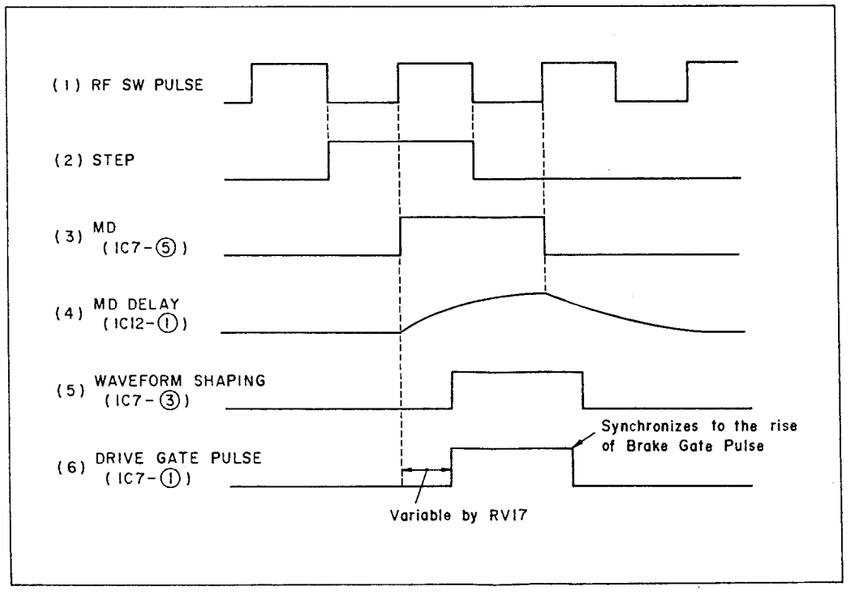

SERVO BLOCK DIAGRAM (DRUM/CAPSTAN)

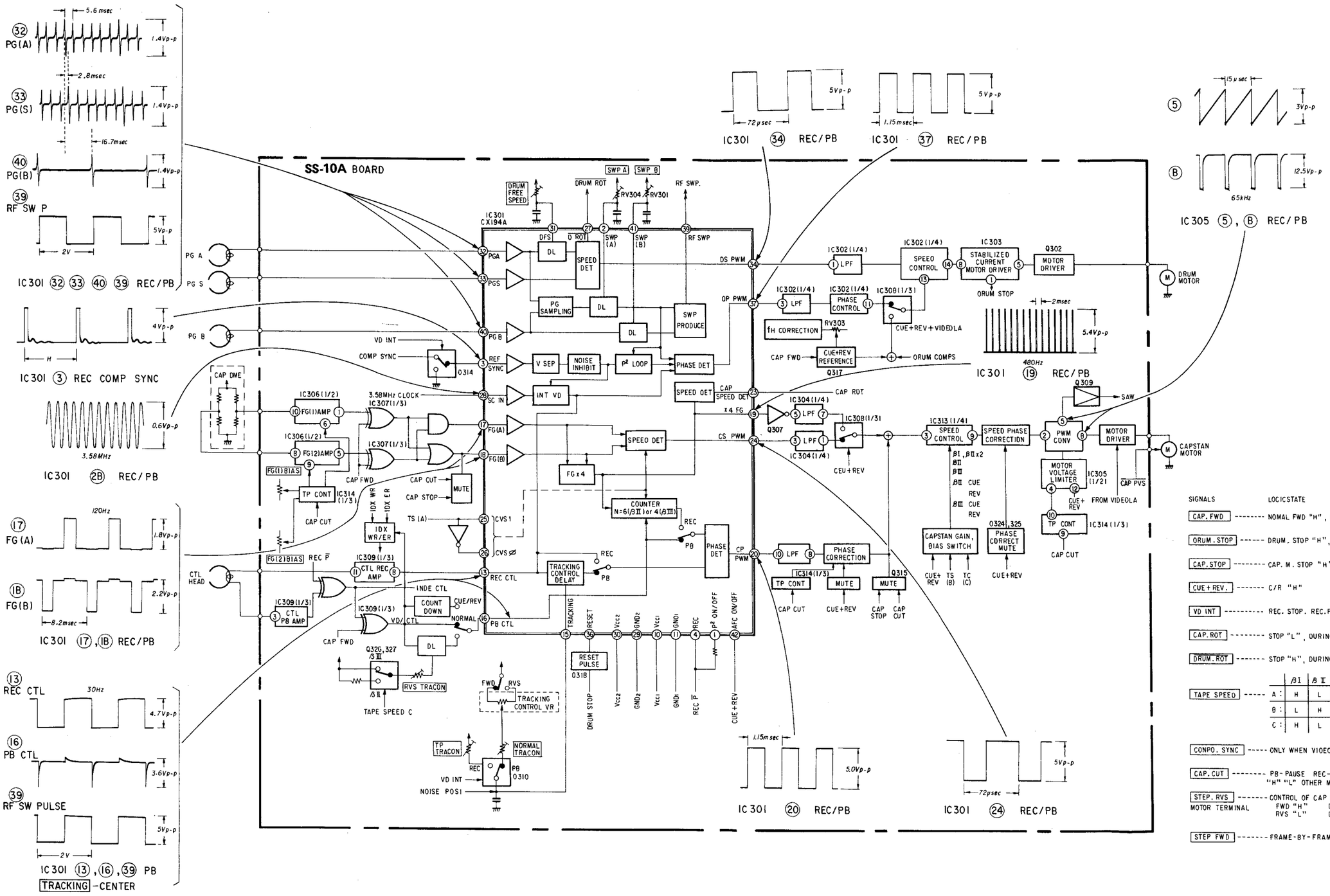

SIGNALS	LOGIC STATE
CAP. FWD	NOMAL FWD "H", PVS "L"
ORUM. STOP	DRUM. STOP "H", DURING ROTATION "L"
CAP. STOP	CAP. M. STOP "H", DURING ROTATION "L"
CUE+REV.	C/R "H"
VD INT	REC. STOP. REC.P "L", PB "H"
CAP. ROT	STOP "L", DURING ROTATION "H"
DRUM. ROT	STOP "H", DURING ROTATION "L"

TAPE SPEED		/3 I	/3 II	/3 III	/3 III x2
	A :	H	L	L	L
	B :	L	H	H	L
	C :	H	L	H	L

CONPO. SYNC ----- ONLY WHEN VIDEO INPUT (V.H.SYNC)

CAP. CUT -------- PB-PAUSE REC-PAUSE SWING SEARCH "H" "L" OTHER MODES "L"

STEP. RVS ------- CONTROL OF CAP MOTOR FWD AND RVS
MOTOR TERMINAL FWD "H" (CAP. SERVO "H")
RVS "L" (CAP. SERVO "H")

STEP FWD -------- FRAME-BY-FRAME "H"

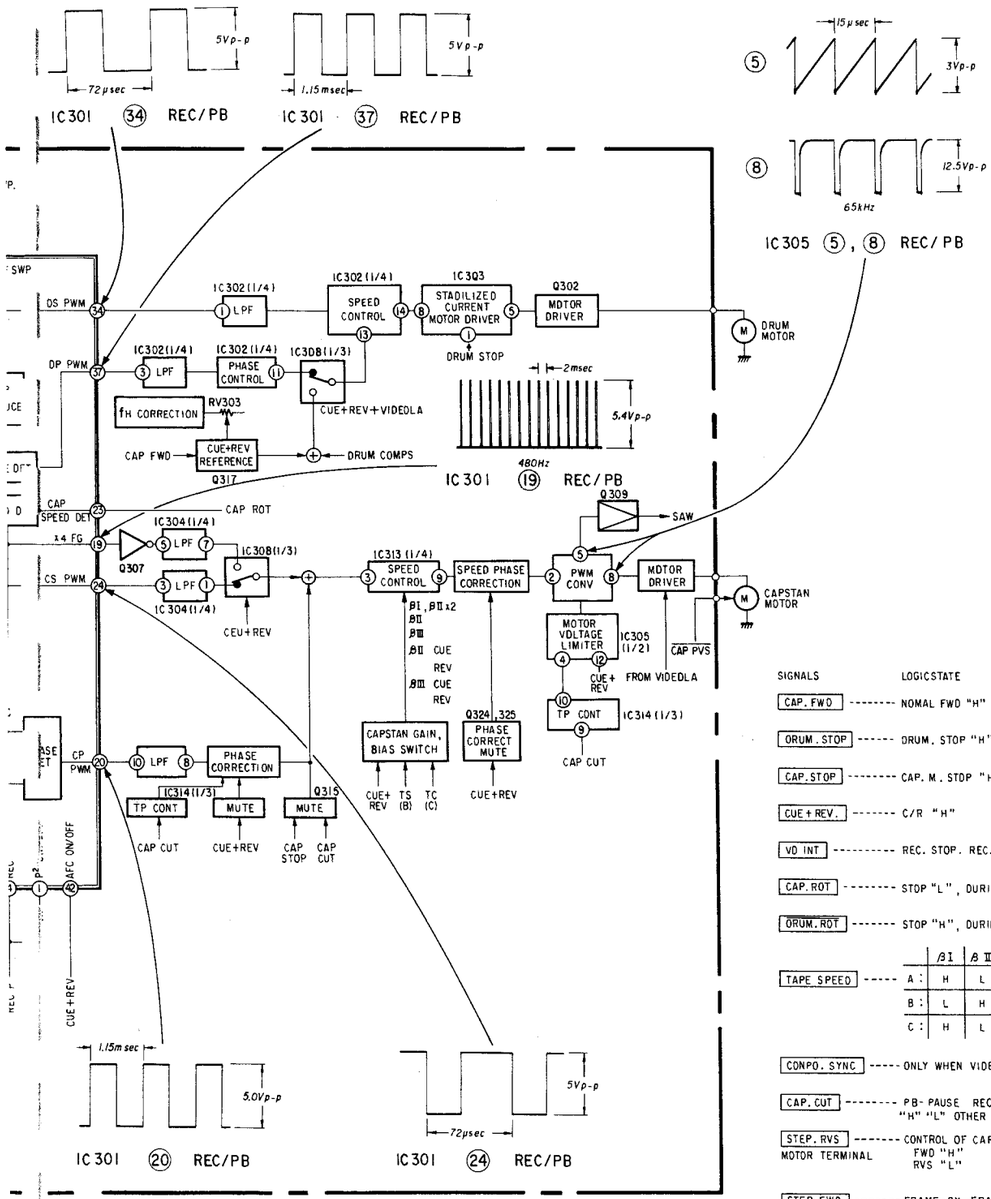

SIGNALS	LOGIC STATE
CAP. FWD	NOMAL FWD "H", PVS "L"
ORUM. STOP	DRUM. STOP "H", DURING ROTATION "L"
CAP. STOP	CAP. M. STOP "H", OURING ROTATION "L"
CUE+REV.	C/R "H"
VD INT	REC. STOP. REC.P "L", PB "H"
CAP. ROT	STOP "L", DURING ROTATION "H"
ORUM. ROT	STOP "H", DURING ROTATION "L"

TAPE SPEED	βI	βII	βIII	βIII x2
A :	H	L	L	L
B :	L	H	H	L
C :	H	L	H	L

CONPO. SYNC	ONLY WHEN VIDEO INPUT (V.H.SYNC)
CAP. CUT	PB-PAUSE REC-PAUSE SWING SEARCH "H" "L" OTHER MODES "L"
STEP. RVS	CONTROL OF CAP MOTOR FWD AND RVS
MOTOR TERMINAL	FWD "H" (CAP. SERVO "H") RVS "L" (CAP. SERVO "H")
STEP FWD	FRAME-BY-FRAME "H"

REEL SERVO BLOCK DIAGRAM

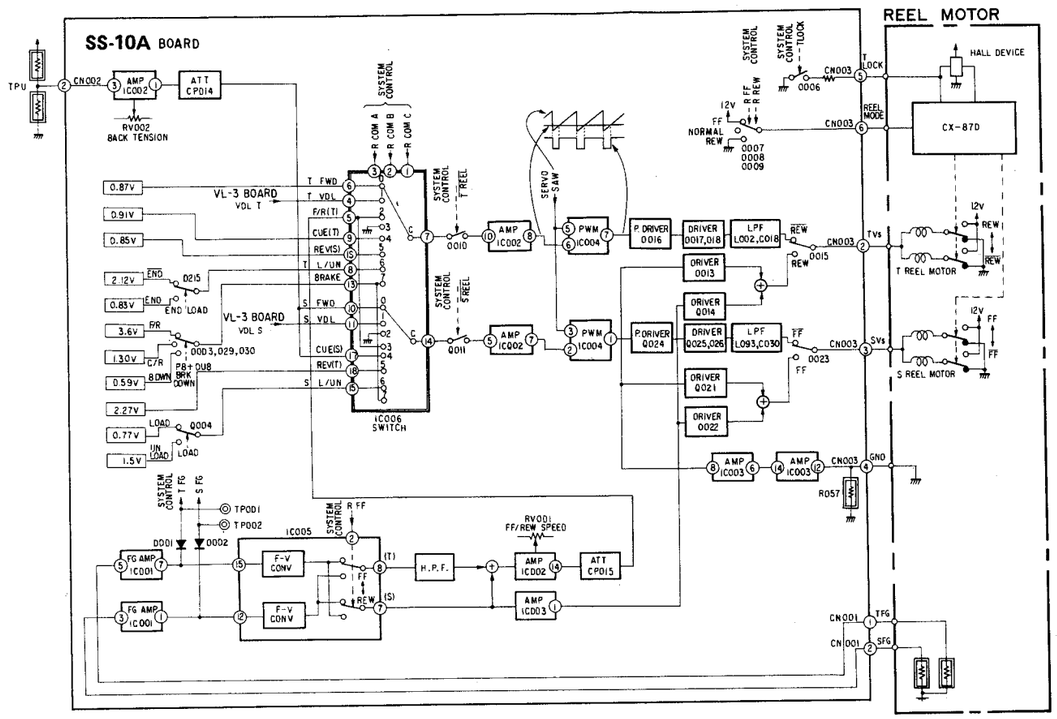

SFG SIGNAL GENERATOR TIMING CHART (1)

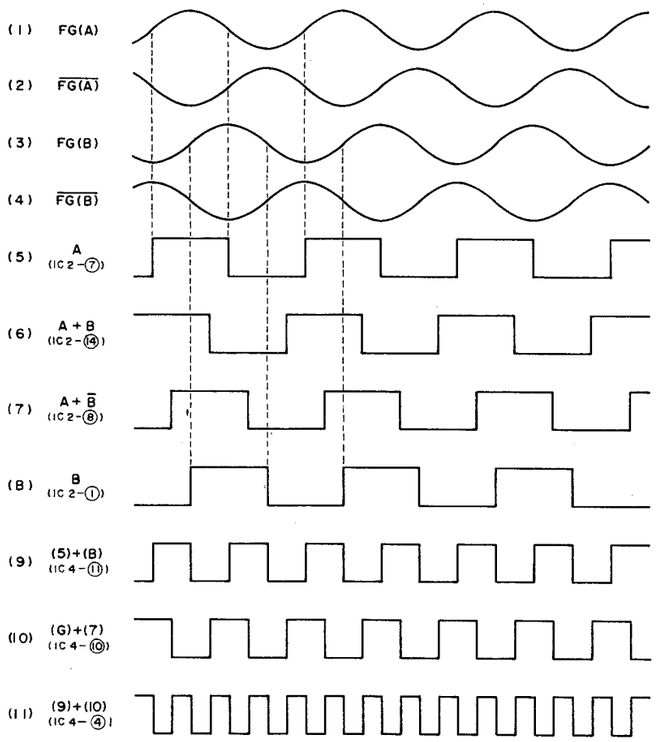

SFG SIGNAL GENERATOR TIMING CHART (2)

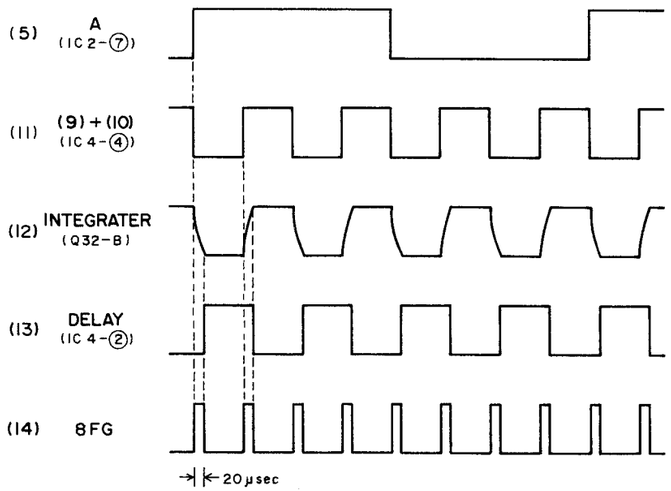

AUDIO BLOCK DIAGRAM

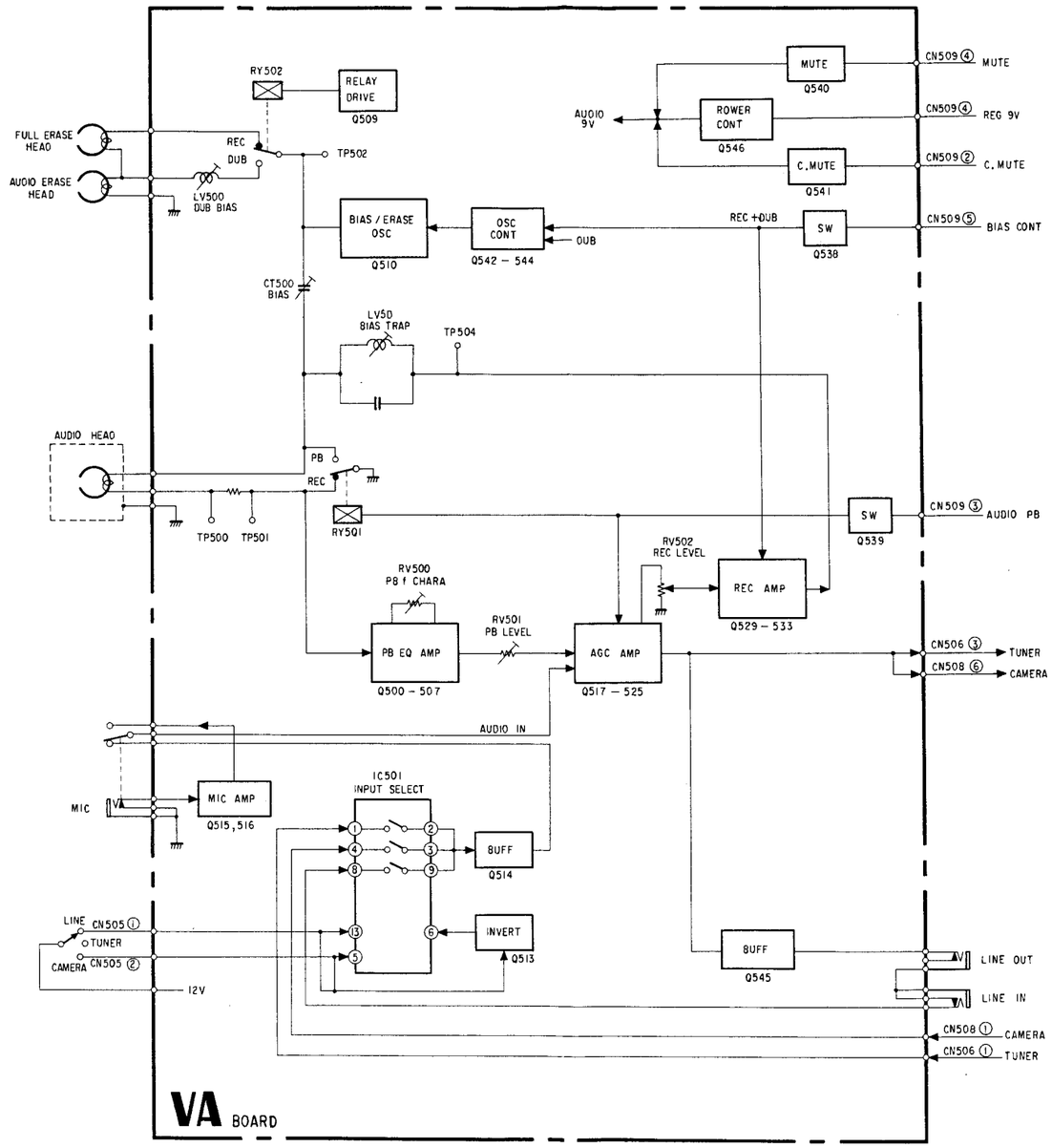

AUDIG BLDCK DIAGRAM

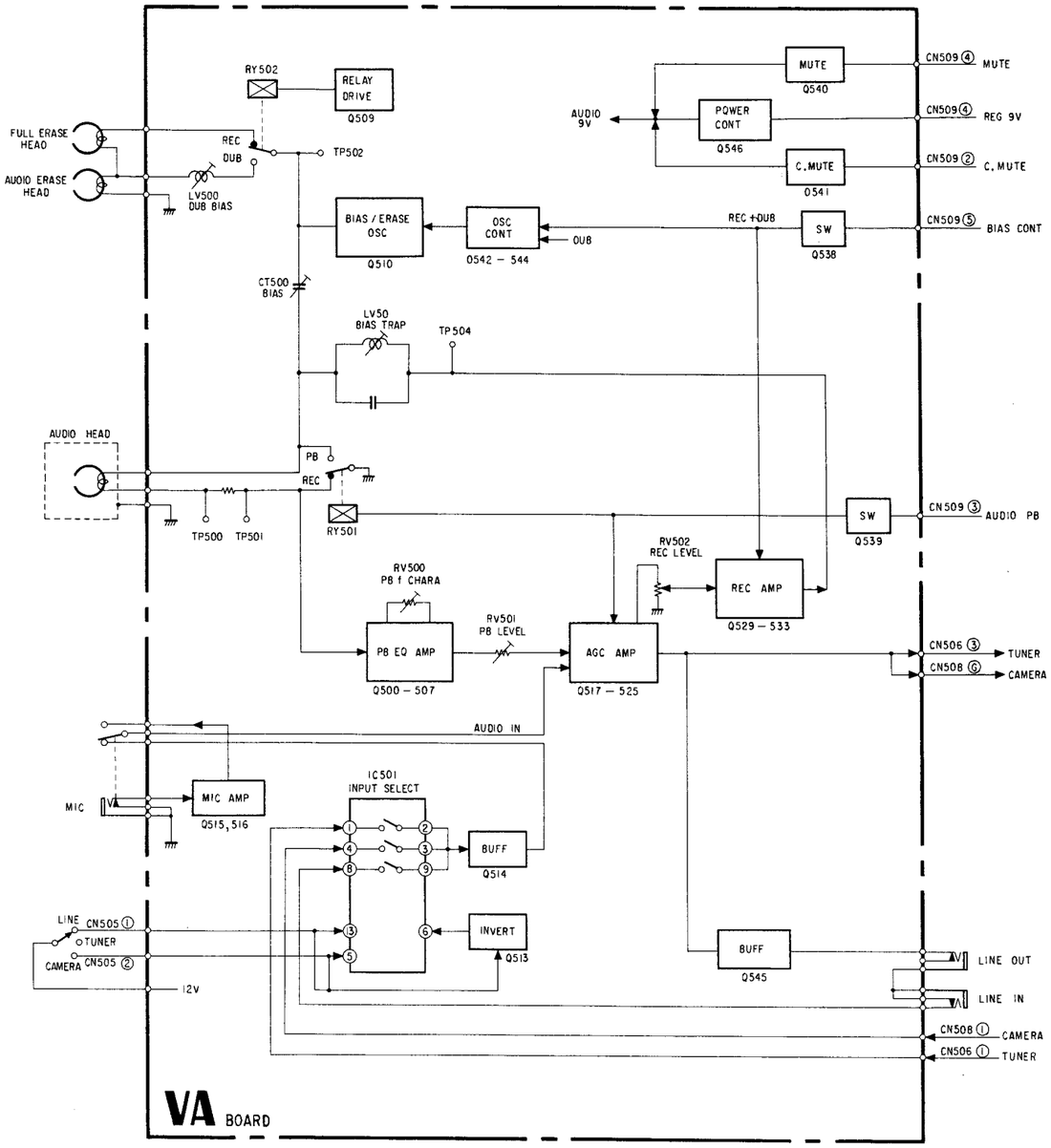

AUDID LEVEL DIAGRAM
– REC MDDE –

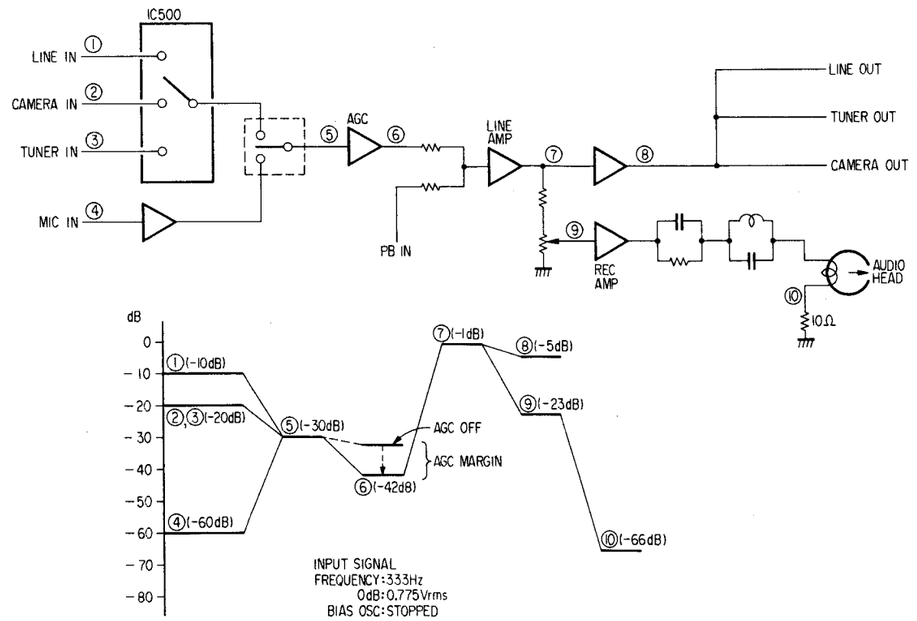

– PB MDDE –

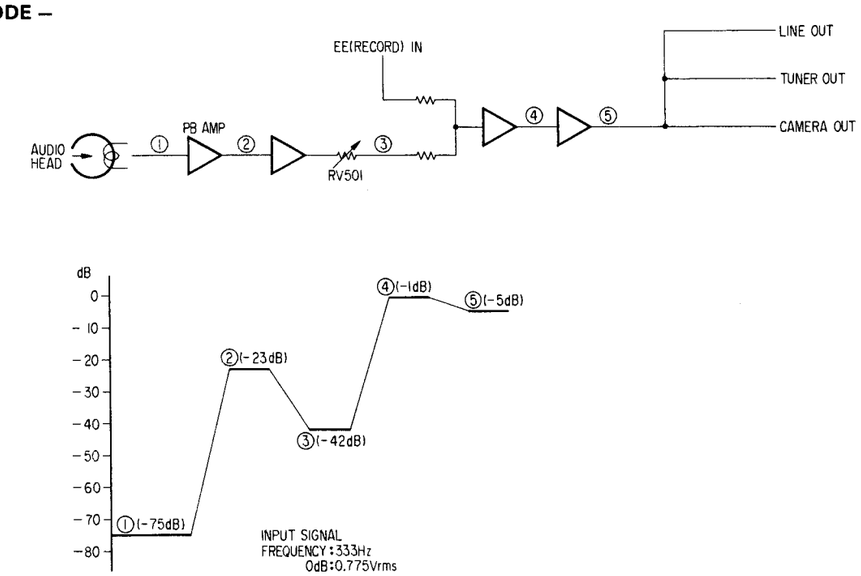

VIDEO BLOCK DIAGRAM

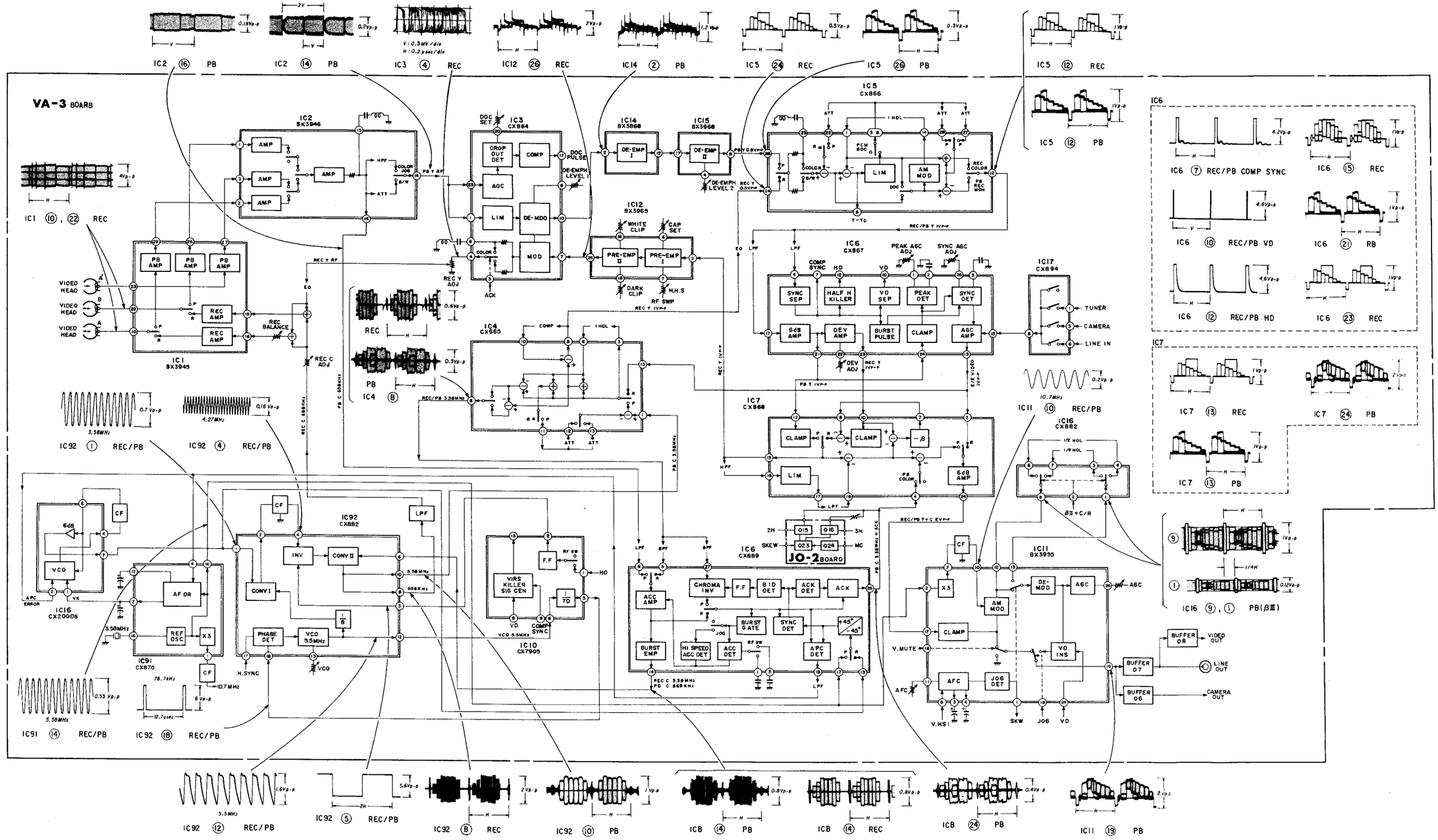

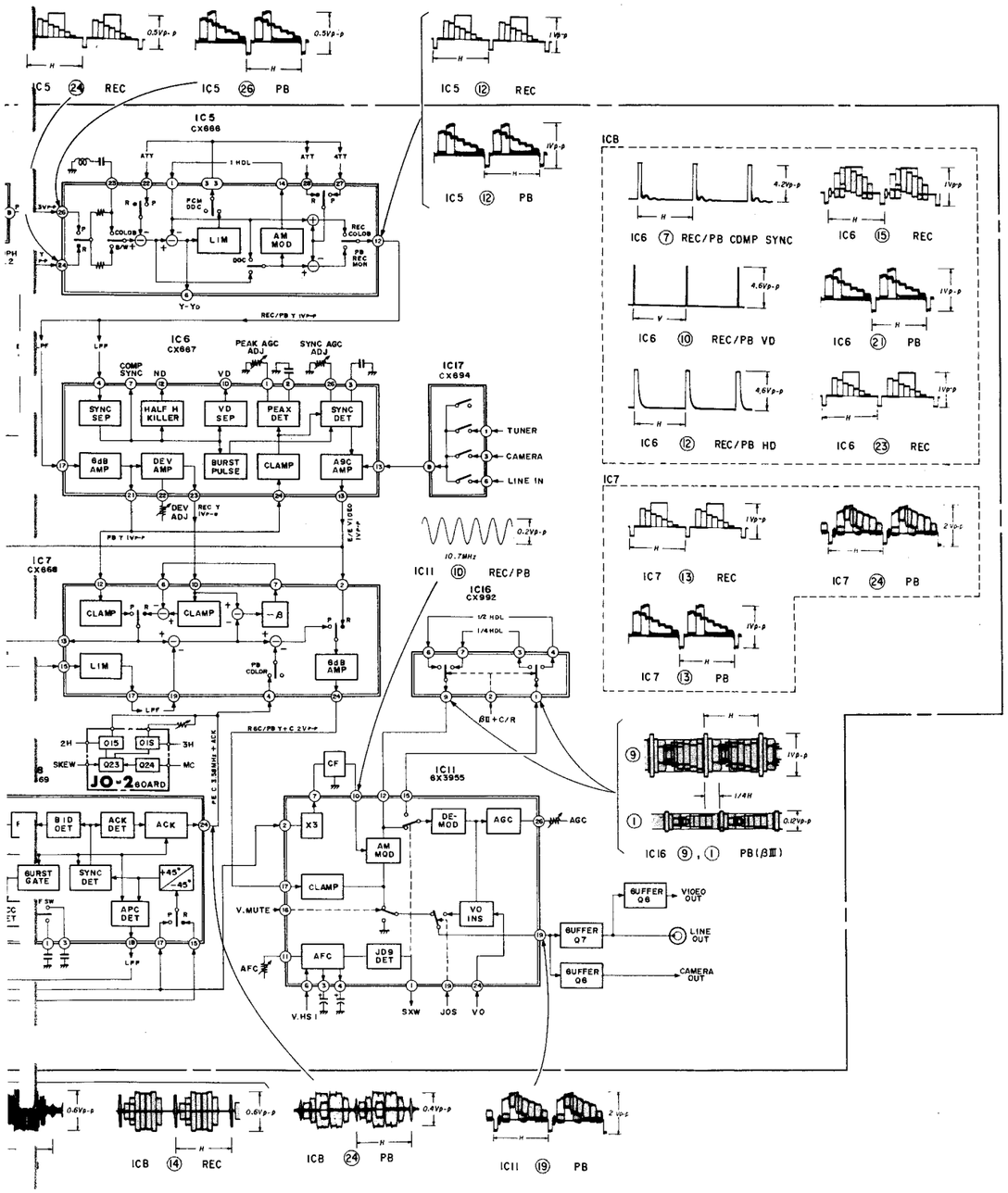

VIDEO Y BLOCK DIAGRAM

PB Y

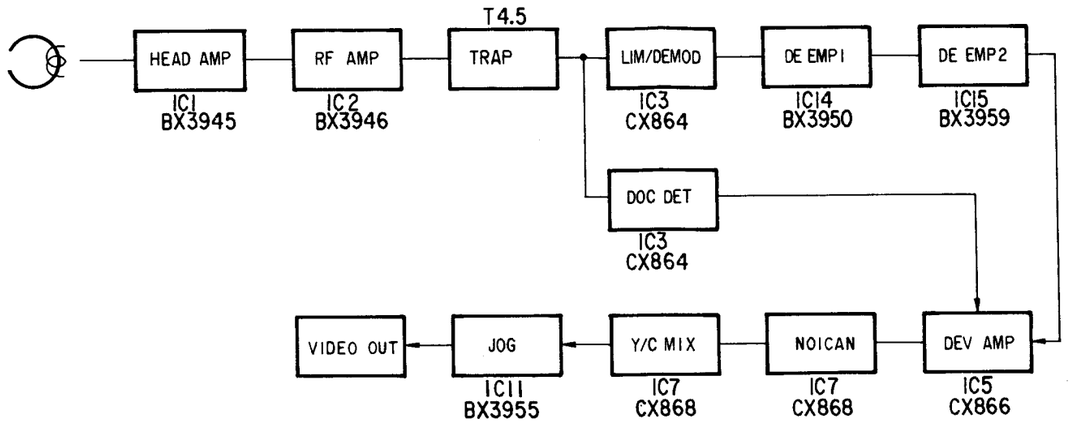

REC Y

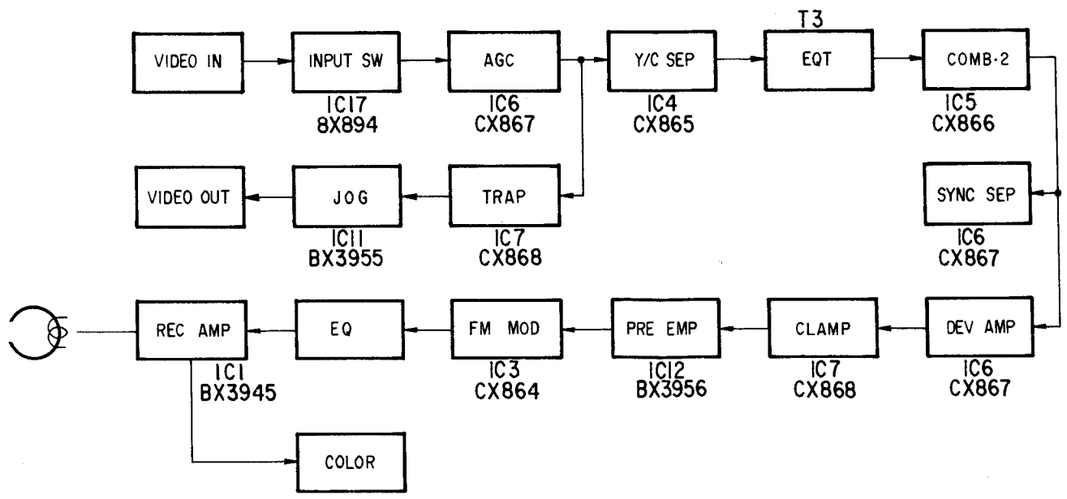

VIDEO CHROMA BLOCK DIAGRAM

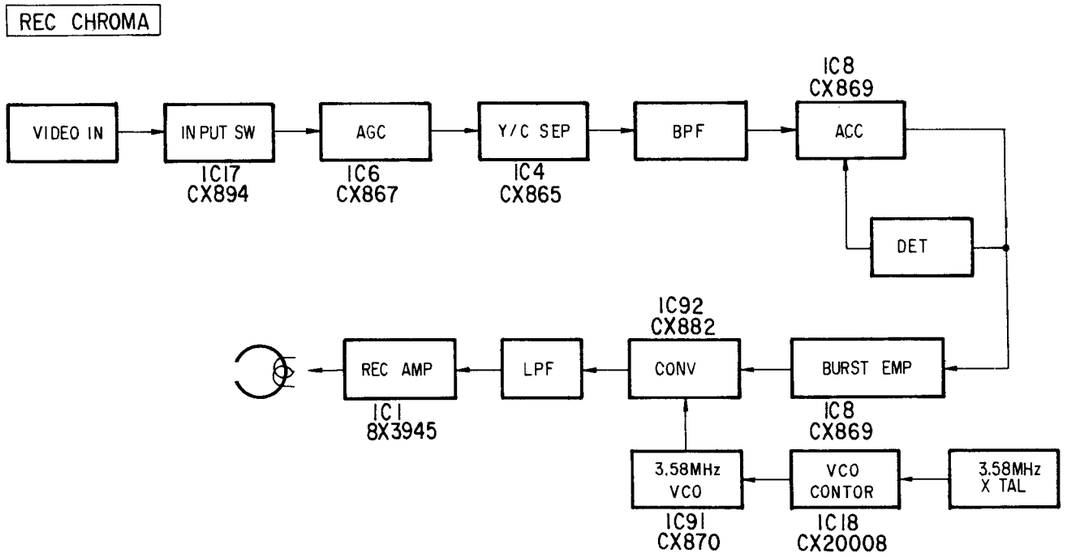

PB CHROMA

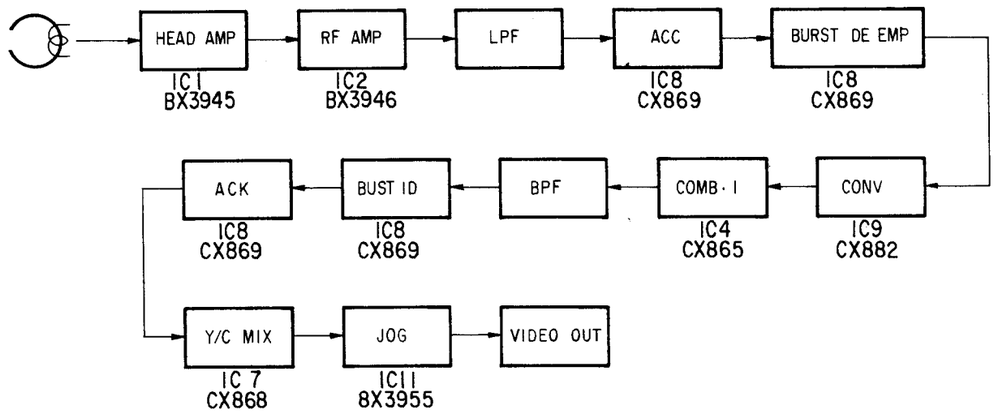

TIMER BLOCK DIAGRAM

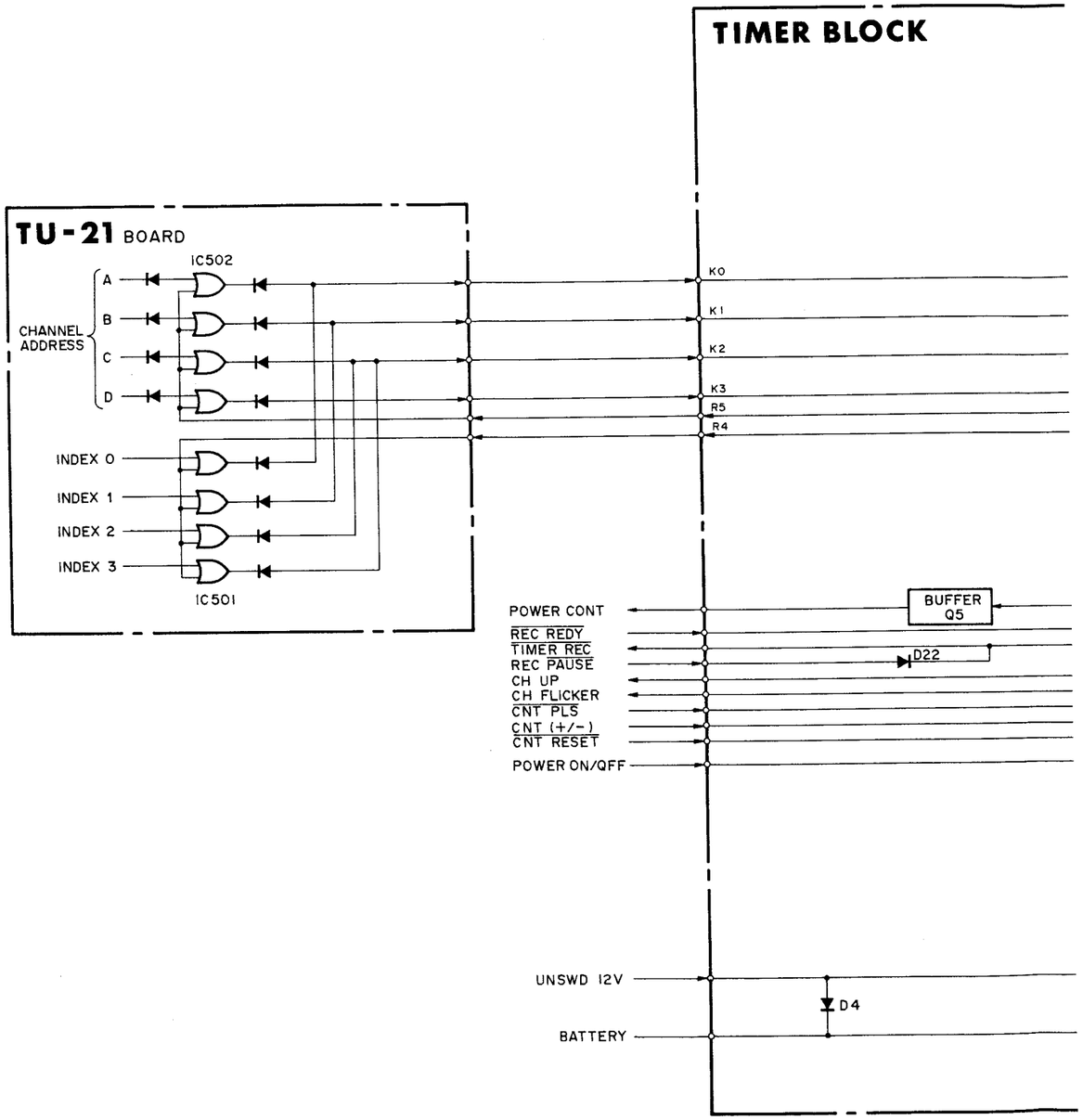

TIMER BLOCK DIAGRAM

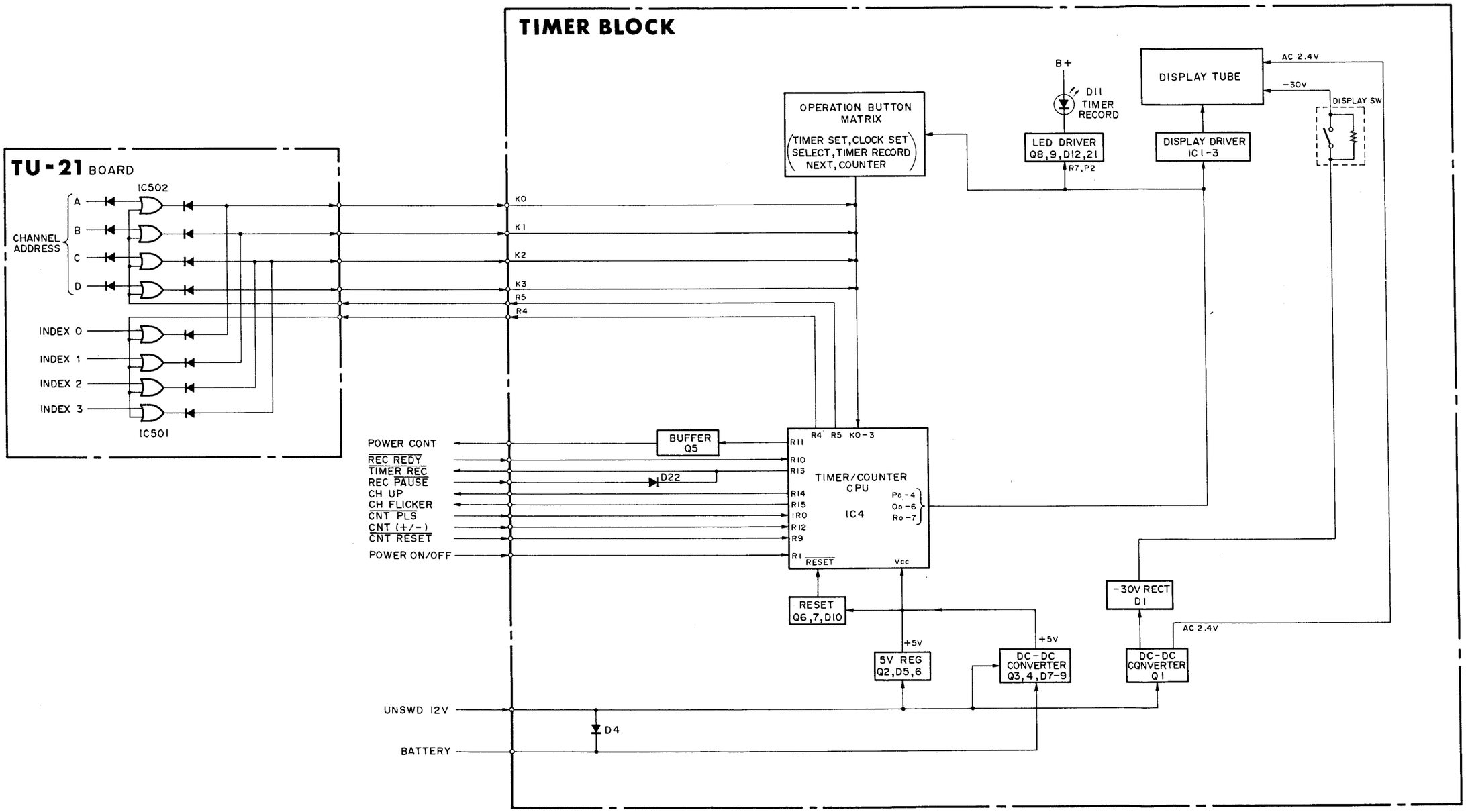

POWER SUPPLY BLOCK DIAGRAM

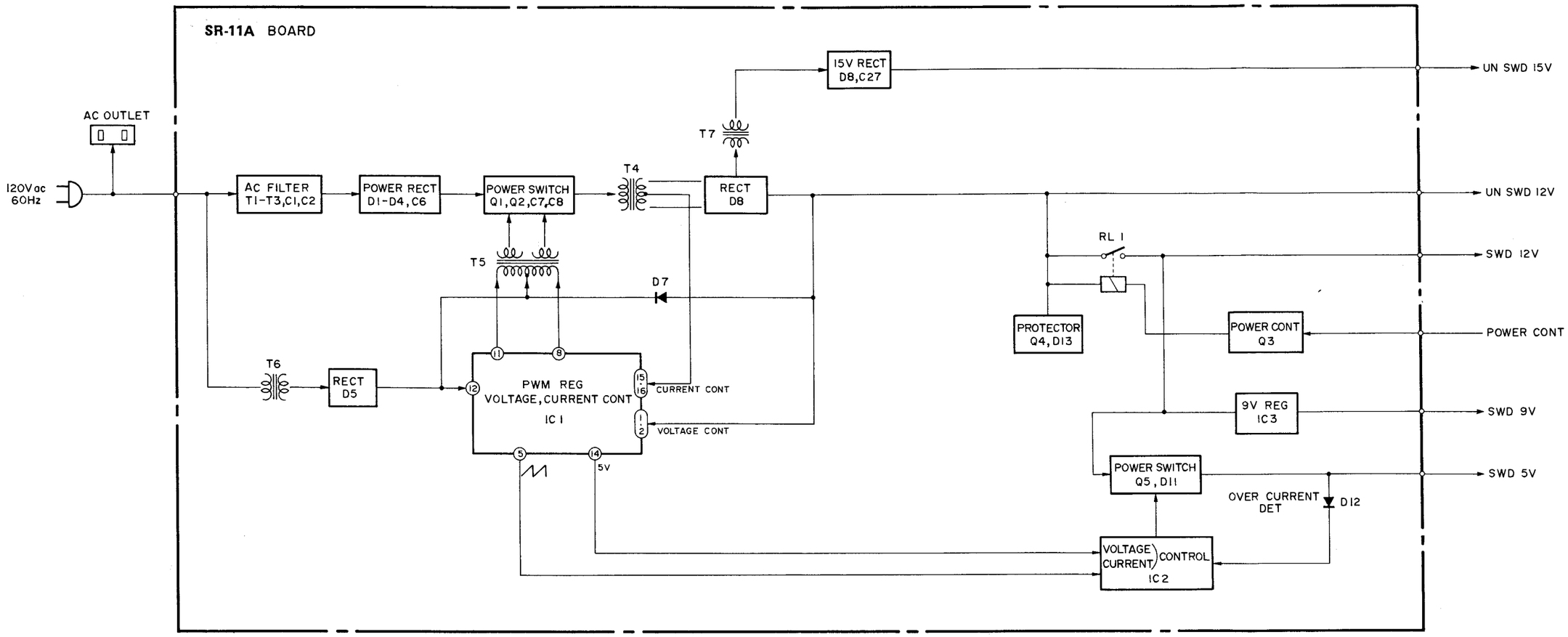

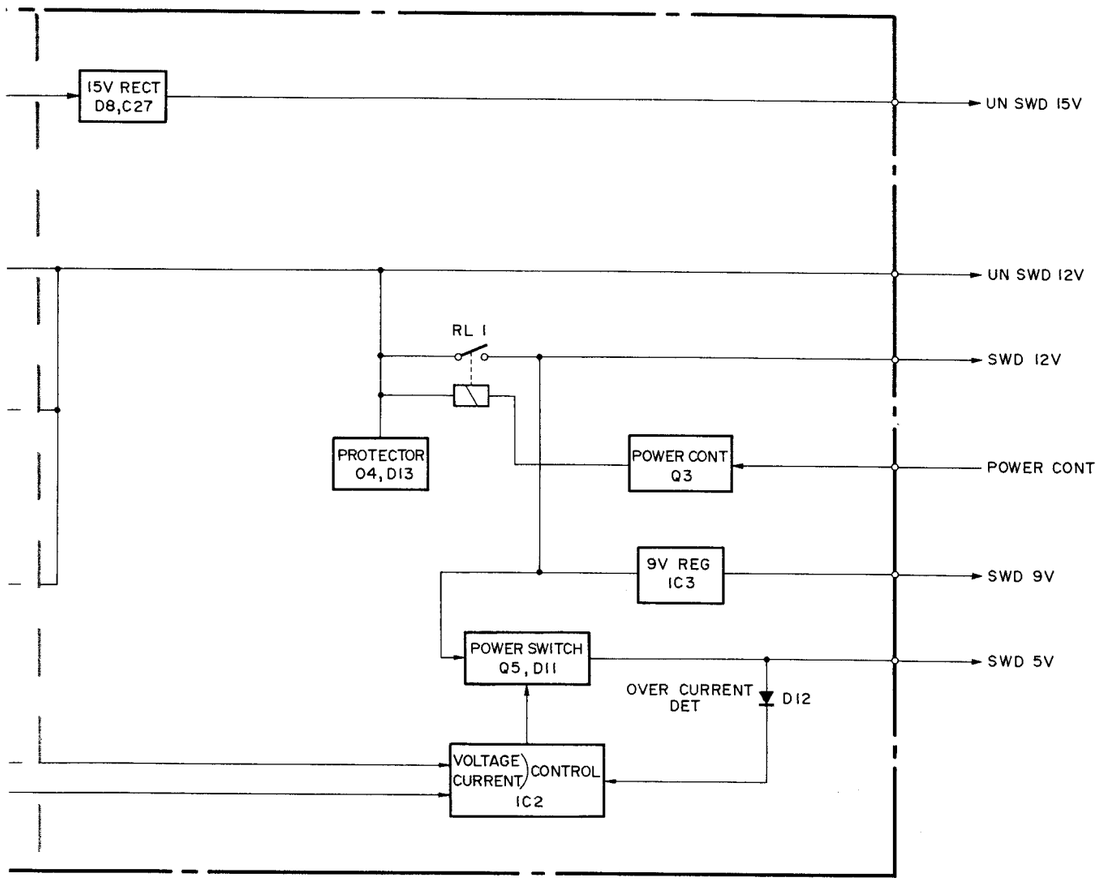
15V RECT
D8,C27
UN SWD 15V
UN SWD 12V
RL 1
SWD 12V
PROTECTOR
Q4, D13
POWER CONT
Q3
POWER CONT
9V REG
IC3
SWD 9V
POWER SWITCH
Q5, D11
SWD 5V
OVER CURRENT
DET
D12
VOLTAGE
CURRENT
CONTROL
IC2

MEMO

SECTION 4
PRINTED WIRING BOARD AND SCHEMATIC DIAGRAM

FRAME SCHEMATIC DIAGRAM

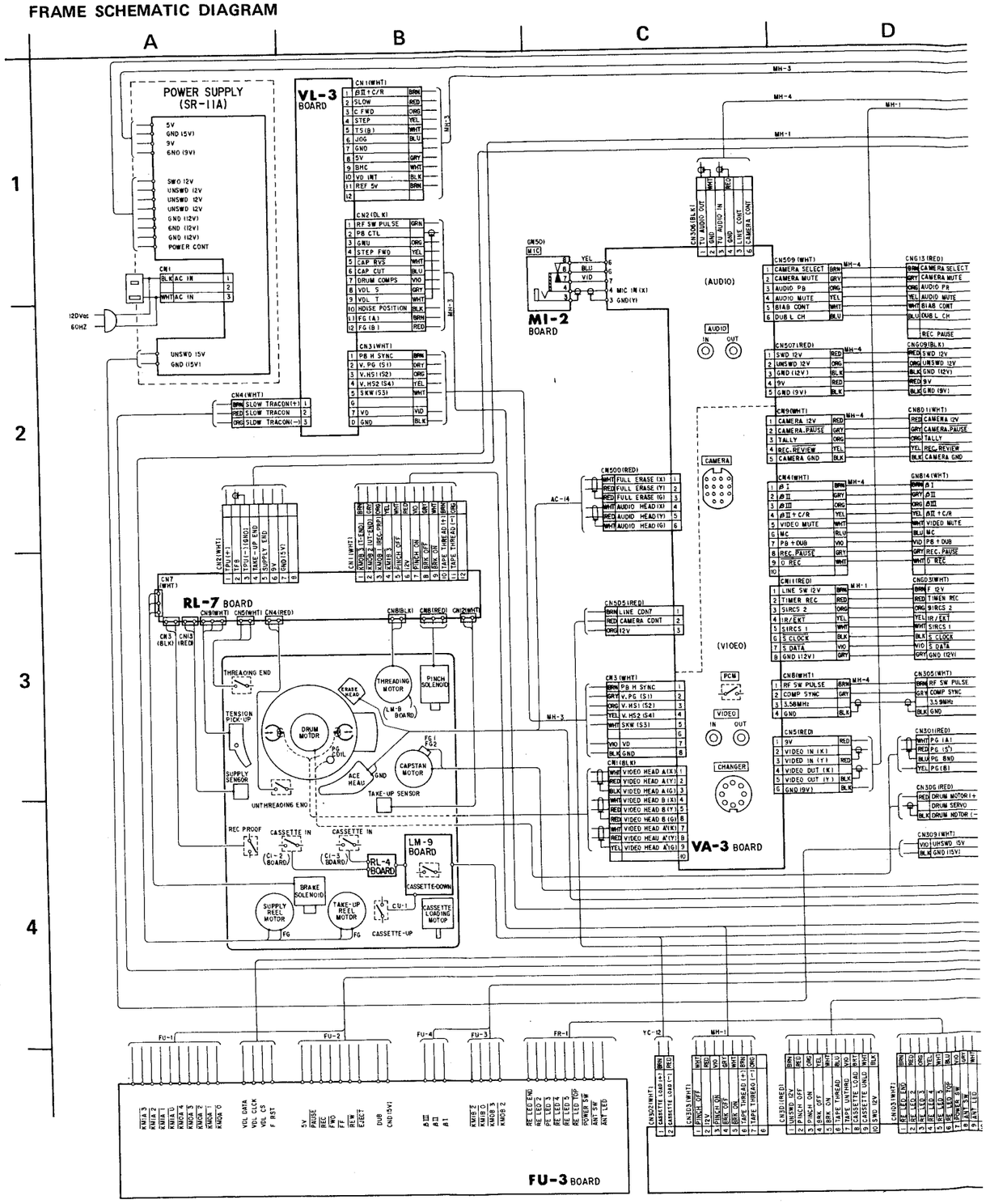

D E F G H

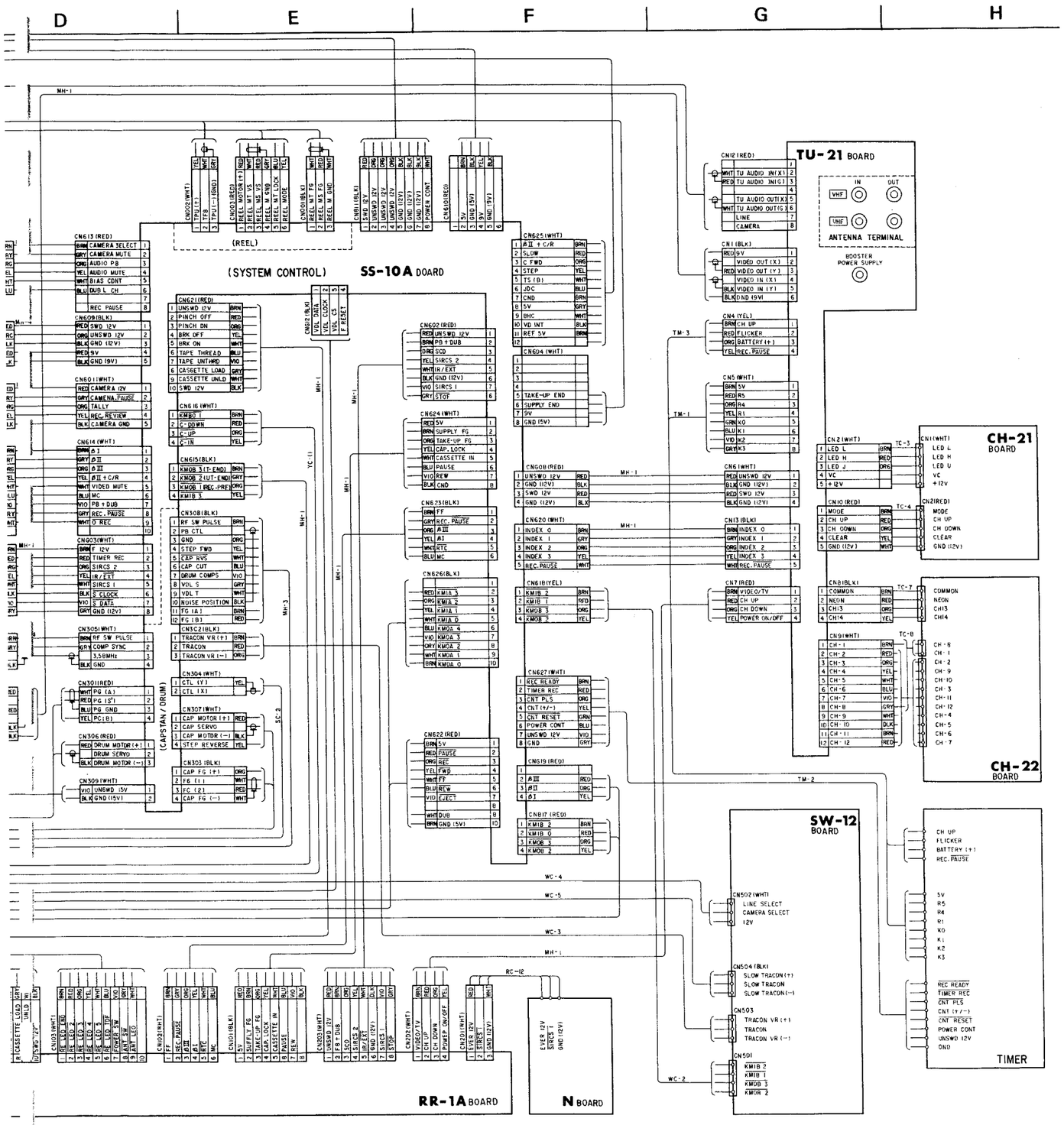
(REEL)
(SYSTEM CONTROL)
SS-10A BOARD
(CAPSTAN / DRUM)
TU-21 BOARD
IN
OUT
VHF
UHF
ANTENNA TERMINAL
BOOSTER POWER SUPPLY
CH-21 BOARD
CH-22 BOARD
SW-12 BOARD
TIMER
RR-1A BOARD
N BOARD
CN613 (RED)
CAMERA SELECT
CAMERA MUTE
AUDIO PB
AUDIO MUTE
BIAS CONT
DUB L CH
REC PAUSE
CN609 (BLK)
SWD 12V
UNSWD 12V
GND (12V)
9V
GND (9V)
CN601 (WHT)
CAMERA 12V
CAMERA PAUSE
TALLY
REC REVIEW
CAMERA GND
CN614 (WHT)
ΔI
ΔII
ΔIII
ΔII + C/R
VIDEO MUTE
MC
PB + DUB
REC PAUSE
O REC
CN603 (WHT)
F 12V
TIMER REC
SIRCS 2
IR/EXT
SIRCS 1
S CLOCK
S DATA
GND (12V)
CN305 (WHT)
RF SW PULSE
COMP SYNC
3.58MHz
GND
CN301 (RED)
PG (A)
PG (B')
PG GND
PC (B)
CN306 (RED)
DRUM MOTOR (+)
DRUM SERVO
DRUM MOTOR (−)
CN309 (WHT)
UNSWD 15V
GND (15V)
CN621 (RED)
UNSWD 12V
PINCH OFF
PINCH ON
BRK OFF
BRK ON
TAPE THREAD
TAPE UNTHRD
CASSETTE LOAD
CASSETTE UNLD
SWD 12V
CN616 (WHT)
KMIB 1
C-DOWN
C-UP
C-IN
CN615 (BLK)
KMOB 3 (T-END)
KMOB 2 (UT-END)
KMOB 1 REC-PREV
KMIB 3
CN308 (BLK)
RF SW PULSE
PB CTL
GND
STEP FWD
CAP RVS
CAP CUT
DRUM COMPS
VDL S
VDL T
NOISE POSITION
FG (A)
FG (B)
CN302 (BLK)
TRACON VR (+)
TRACON
TRACON VR (−)
CN304 (WHT)
CTL (Y)
CTL (X)
CN307 (WHT)
CAP MOTOR (+)
CAP SERVO
CAP MOTOR (−)
STEP REVERSE
CN303 (BLK)
CAP FG (+)
FG (1)
FG (2)
CAP FG (−)
CN602 (RED)
UNSWD 12V
PB + DUB
SCD
SIRCS 2
SIRCS 1
STOP
CN624 (WHT)
5V
SUPPLY FG
TAKE-UP FG
CAP. LOCK
CASSETTE IN
PAUSE
REW
CND
CN623 (BLK)
FF
REC. PAUSE
ΔII
ΔI
RTC
MC
CN626 (BLK)
KMIA 3
KMIA 2
KMIA 1
KMIA 0
KMOA 4
KMOA 3
KMOA 2
KMOA 1
KMOA 0
CN622 (RED)
5V
PAUSE
REC
FWD
FF
REW
EJECT
DUB
GND (5V)
CN625 (WHT)
ΔII + C/R
SLOW
C FWD
STEP
TS (B)
JDC
CND
5V
VD INT
REF 5V
CN604 (WHT)
TAKE-UP END
SUPPLY END
9V
GND (5V)
CN608 (RED)
UNSWD 12V
GND (12V)
SWD 12V
GND (12V)
CN620 (WHT)
INDEX 0
INDEX 1
INDEX 2
INDEX 3
REC. PAUSE
CN618 (YEL)
KMIB 2
KMIB 1
KMOB 3
KMOB 2
CN627 (WHT)
REC READY
TIMER REC
CNT PLS
CNT (+/−)
CNT RESET
POWER CONT
UNSWD 12V
GND
CN619 (RED)
ΔII
ΔI
CN617 (RED)
KMIB 2
KMIB 0
KMOB 3
KMOB 2
CN612 (RED)
TU AUDIO IN (X)
TU AUDIO IN (G)
TU AUDIO OUT (X)
TU AUDIO OUT (G)
LINE
CAMERA
CN1 (BLK)
9V
VIDEO OUT (X)
VIDEO OUT (Y)
VIDEO IN (X)
VIDEO IN (Y)
GND (9V)
CN4 (YEL)
CH UP
FLICKER
BATTERY (+)
REC. PAUSE
CN5 (WHT)
5V
R5
R4
R1
K0
K1
K2
K3
CN6 (WHT)
UNSWD 12V
GND (12V)
SWD 12V
GND (12V)
CN13 (BLK)
INDEX 0
INDEX 1
INDEX 2
INDEX 3
REC. PAUSE
CN7 (RED)
VIDEO/TV
CH UP
CH DOWN
POWER ON/OFF
CN2 (WHT)
LED L
LED H
LED J
VC
+12V
CN10 (RED)
MODE
CH UP
CH DOWN
CLEAR
GND (12V)
CN81 (BLK)
COMMON
NEON
CH13
CH14
CN91 (WHT)
CH-1
CH-2
CH-3
CH-4
CH-5
CH-6
CH-7
CH-8
CH-9
CH-10
CH-11
CH-12
CN1 (WHT)
LED L
LED H
LED J
VC
+12V
CN21 (RED)
MODE
CH UP
CH DOWN
CLEAR
GND (12V)
COMMON
NEON
CH13
CH14
CH-8
CH-1
CH-2
CH-9
CH-10
CH-3
CH-6
CH-11
CH-12
CH-5
CH-4
CH-7
CH UP
FLICKER
BATTERY (+)
REC. PAUSE
5V
R5
R4
R1
K0
K1
K2
K3
REC READY
TIMER REC
CNT PLS
CNT (+/−)
CNT RESET
POWER CONT
UNSWD 12V
GND
CN502 (WHT)
LINE SELECT
CAMERA SELECT
12V
CN504 (BLK)
SLOW TRACON (+)
SLOW TRACON
SLOW TRACON (−)
CN503
TRACON VR (+)
TRACON
TRACON VR (−)
CN501
KMIB 2
KMIB 1
KMOB 3
KMOB 2
CN103 (WHT)
CN102 (WHT)
CN101 (BLK)
CN203 (WHT)
CN202 (WHT)
CN201 (WHT)
EVER 12V
SIRCS 1
GND (12V)
MH-1
MH-2
MH-3
TM-1
TM-2
TM-3
TC-1
TC-2
TC-3
TC-4
TC-7
TC-8
SC-2
WC-1
WC-2
WC-3
WC-4
WC-5
RC-12

VA-3 BOARD (VIDEO)

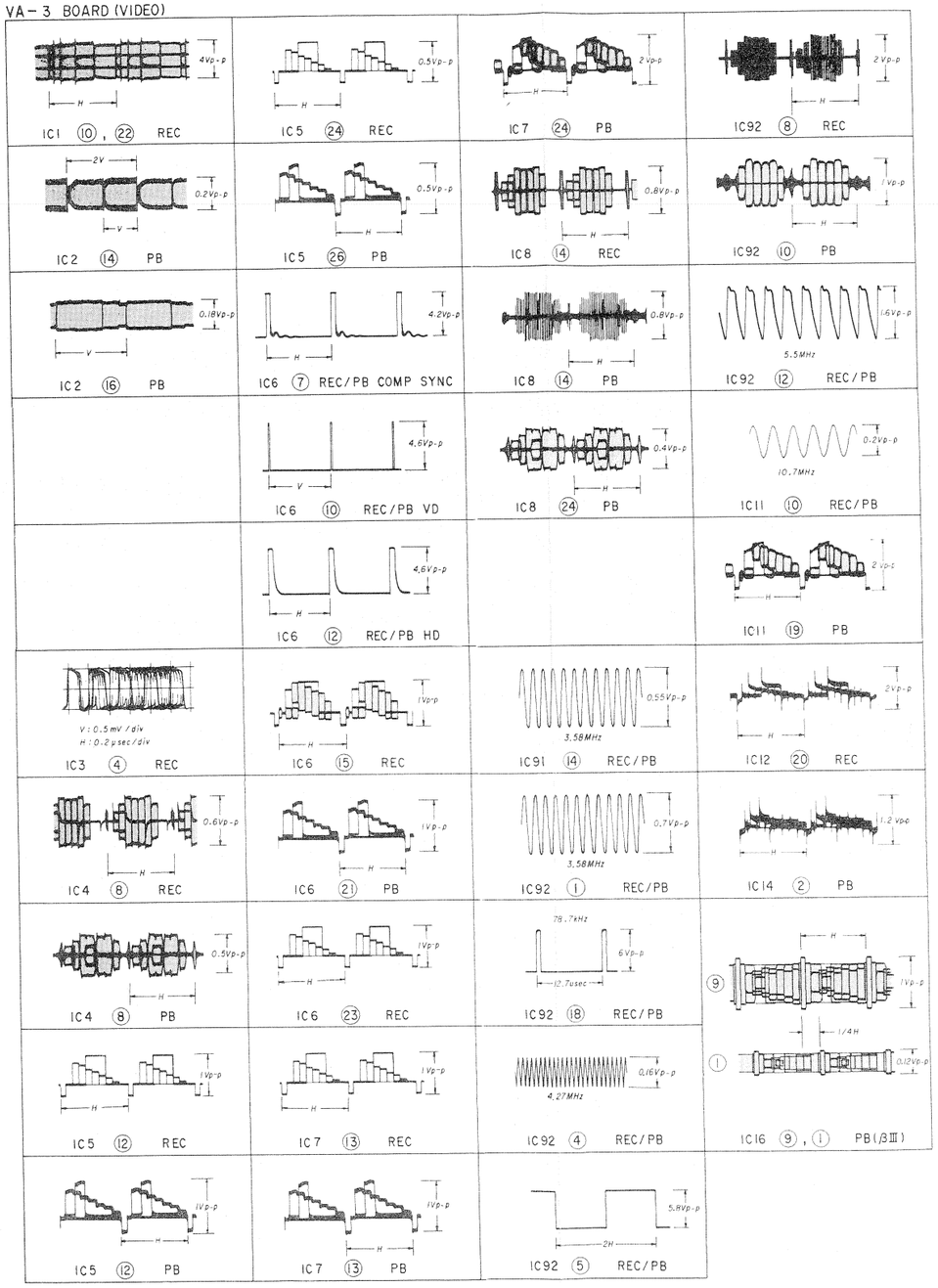

VA-3 (Y & CHROMA SIGNALS RECORD/PLAYBACK PROCESS) PRINTED WIRING BOARD — *Ref. No.1000 series* —

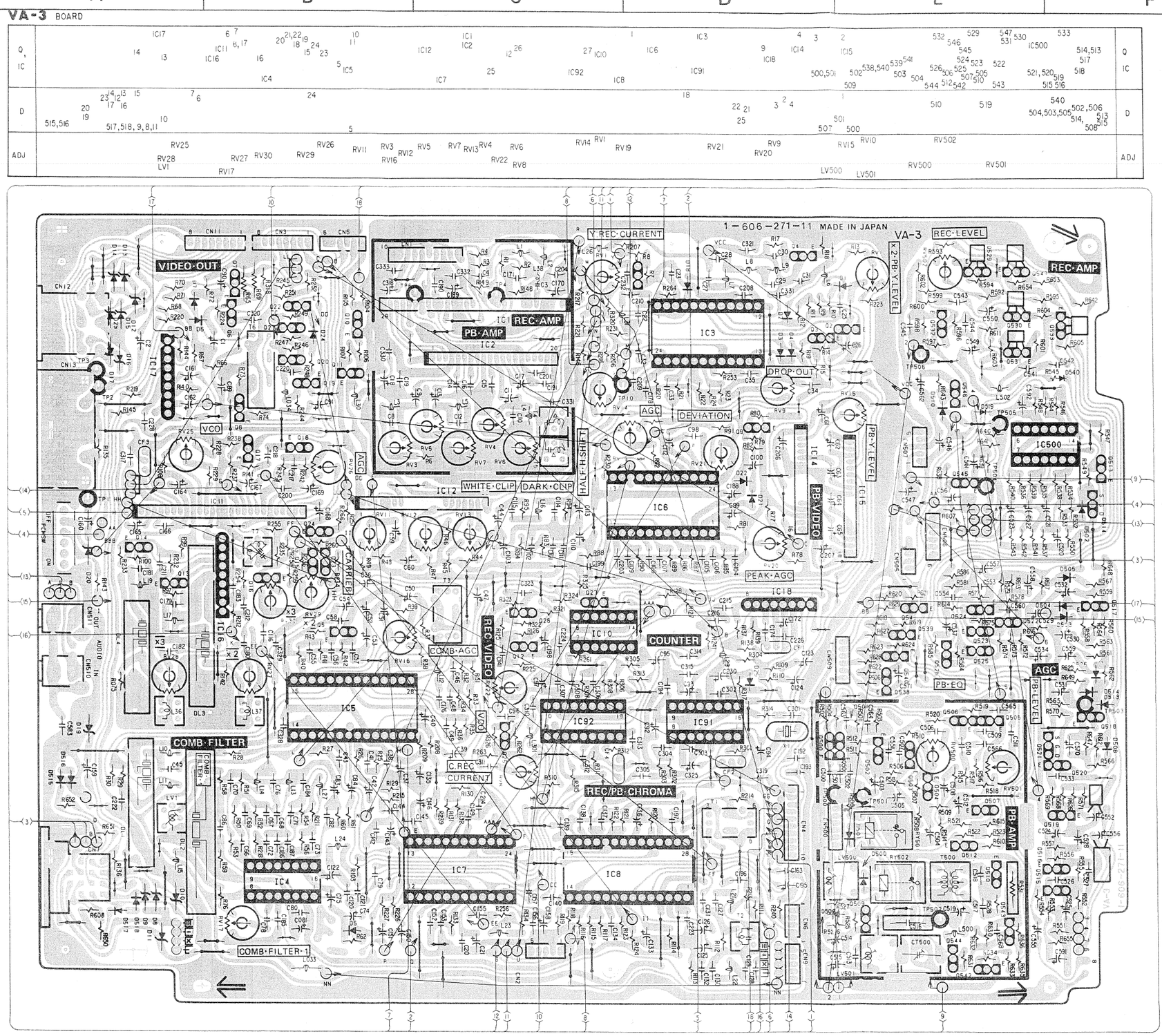

Note: The components identified by shading and mark ⚠ are critical for safety. Replace only with part number specified.

Note: Les composants identifiés par une trame et une marque ⚠ sont critiques pour la sécurité. Ne les remplacer que par une pièce portant le numéro spécifié.

Note:

- All capacitors are in μF unless otherwise noted. pF : μμF 50WV or less are not indicated except for electrolytics and tantalums.
- All resistors are in ohms, ¼W unless otherwise noted. kΩ : 1000Ω, MΩ : 1000kΩ
- : nonflammable resistor.
- : fusible resistor.
- △ : internal component.
- : panel designation.
- All variable and adjustable resistors have characteristic curve B, unless otherwise noted.
- The red lines show the main voltages.
- Marked * is not able to measure the voltage of it's position.
- All voltages are dc measured with a VOM (20 kΩ/V).

When indicating parts by reference number, please include the board name.

VA-3 (Y & CHROMA SIGNALS RECORD/PLAYBACK PROCESS) BOARD SCHEMATIC DIAGRAM

– Ref. No.1000 series –

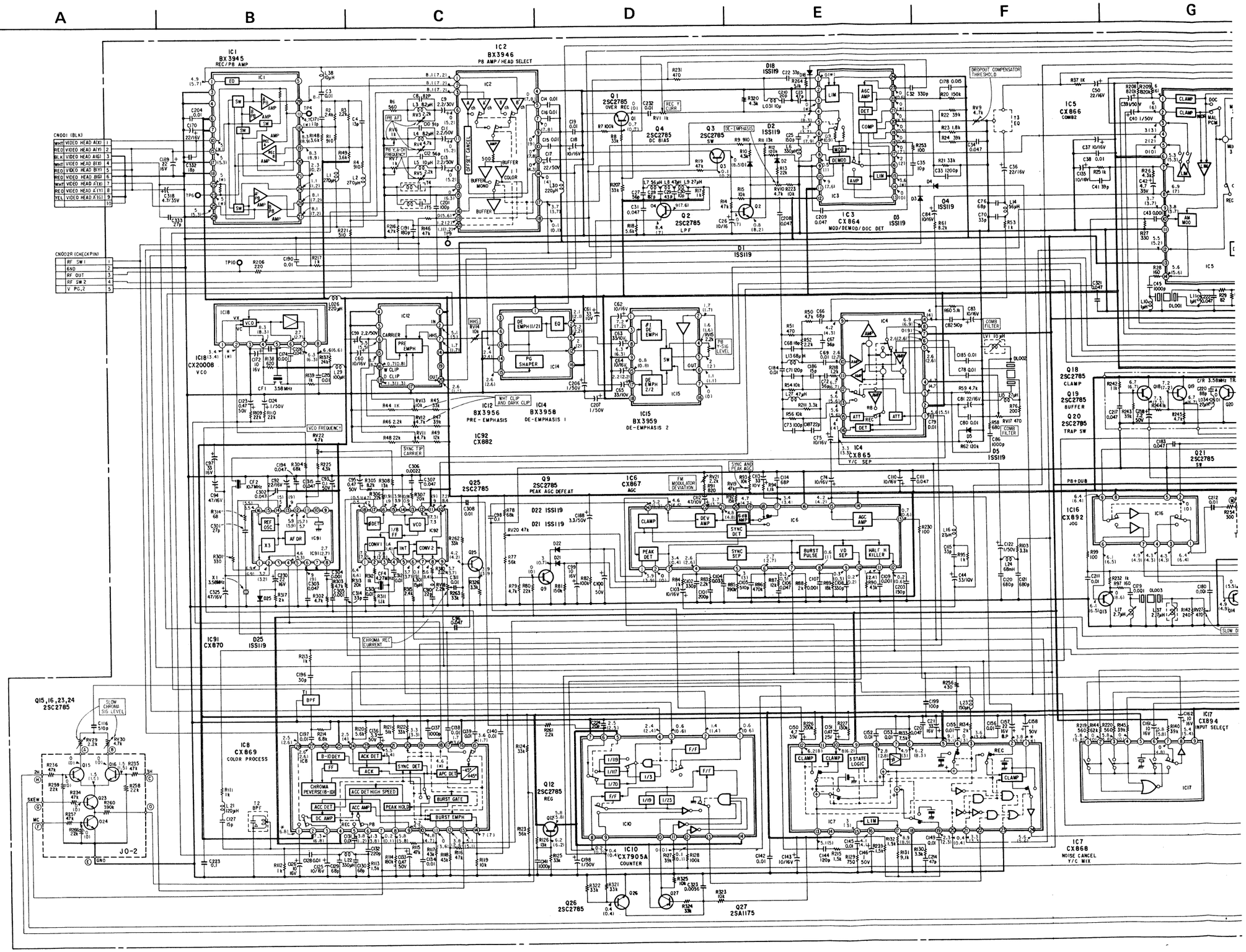

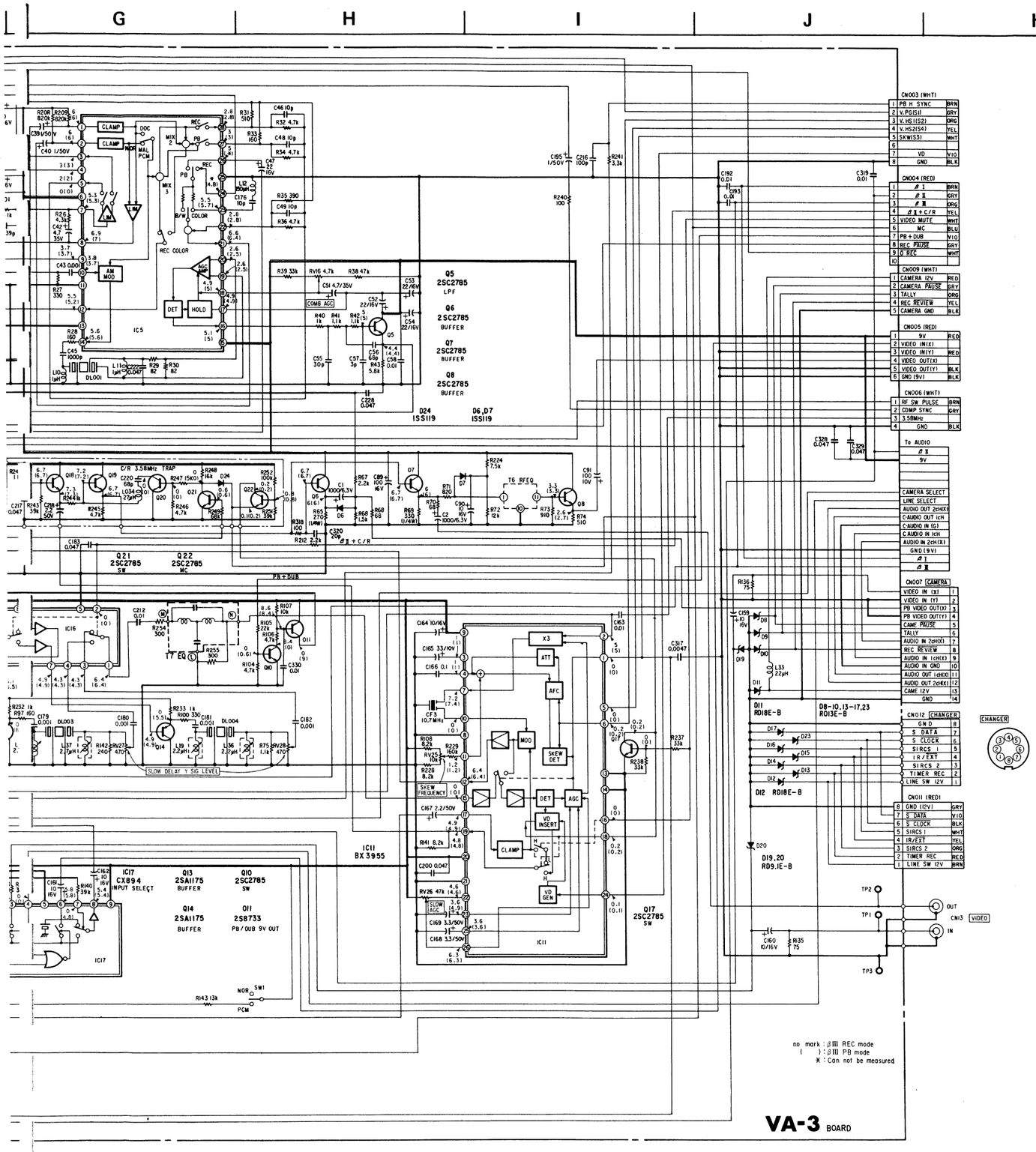

When indicating parts by reference number, please include the board name.

VA-3 (AUDIO RECORD/PLAYBACK PROCESS) AND MI-2 (MIC JACK) PRINTED WIRING BOARD — *Ref. No. VA-3 BOARD: 1000 series MI-2 BOARD: 2000 series* —

A B C D E F G H

1 2 3 4 5

VA-3 BOARD

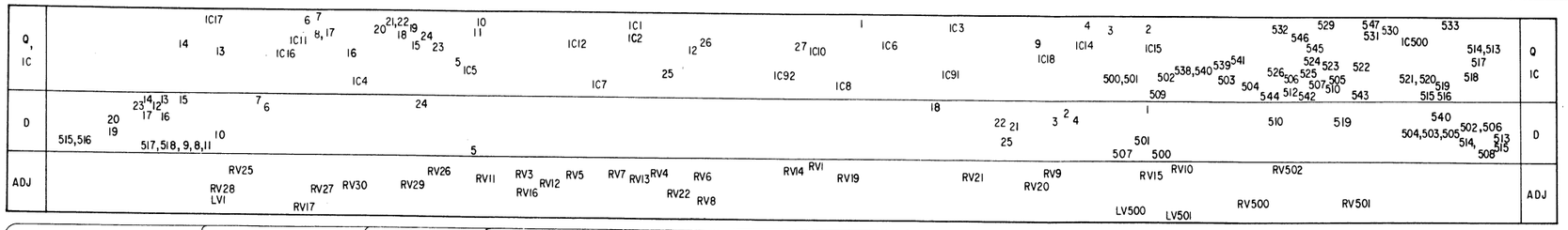

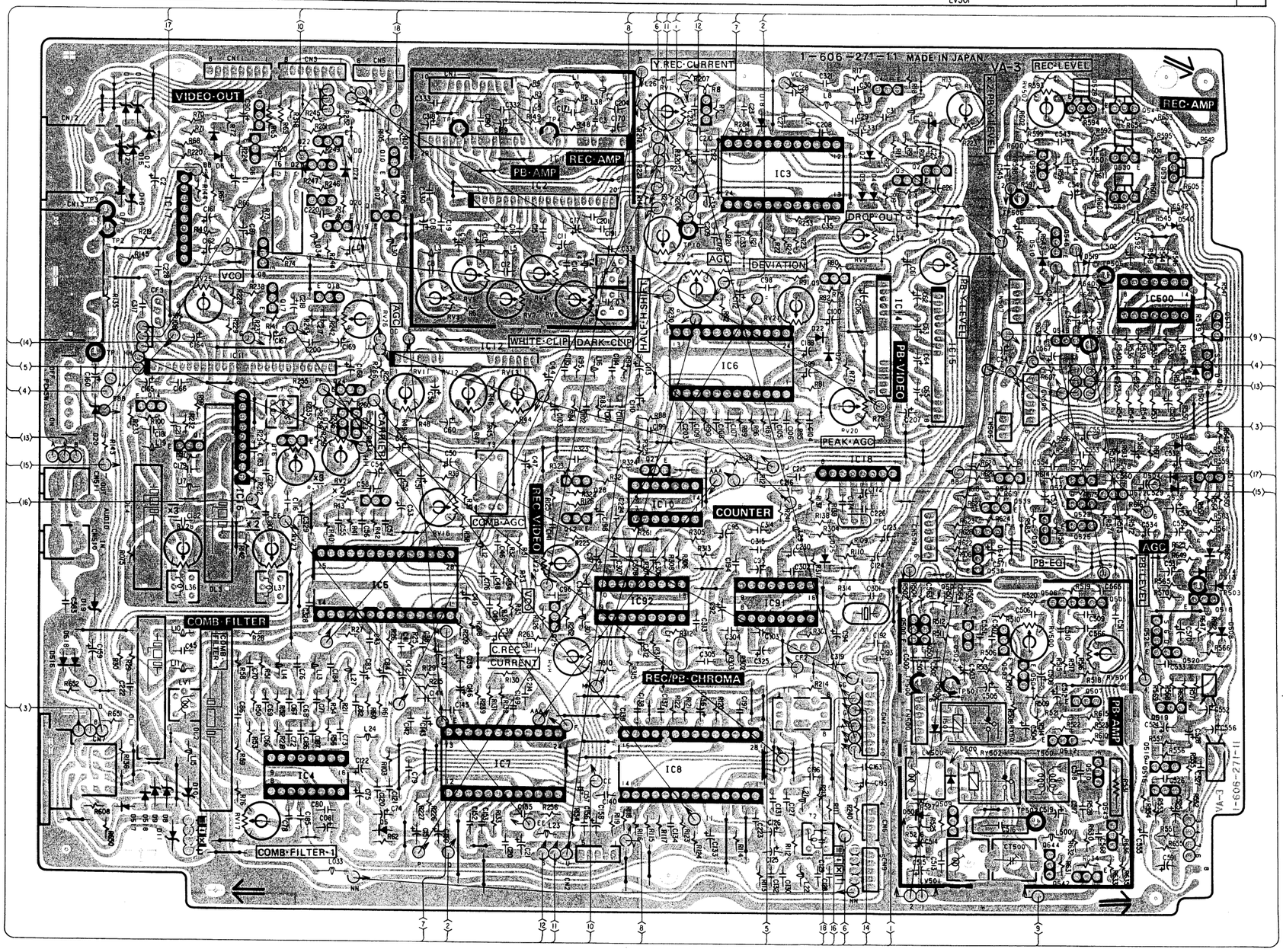

H I

MI-2 BOARD

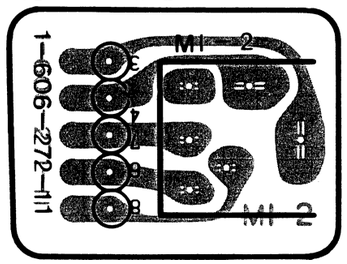

VA-3 BOARD (AUDIO)

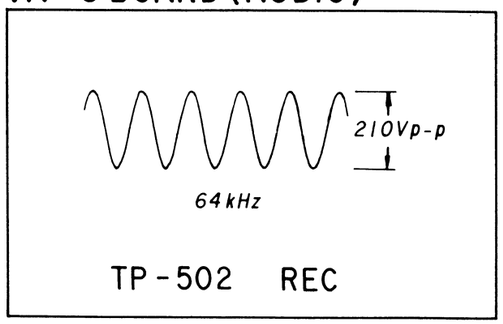

VA-3 (AUDIO RECORD/PLAYBACK PROCESS) AND MI-2 (MIC JACK) BOARD SCHEMATIC DIAGRAM — *Ref. No. VA-3 BOARD: 1000 series MI-2 BOARD: 2000 series* —

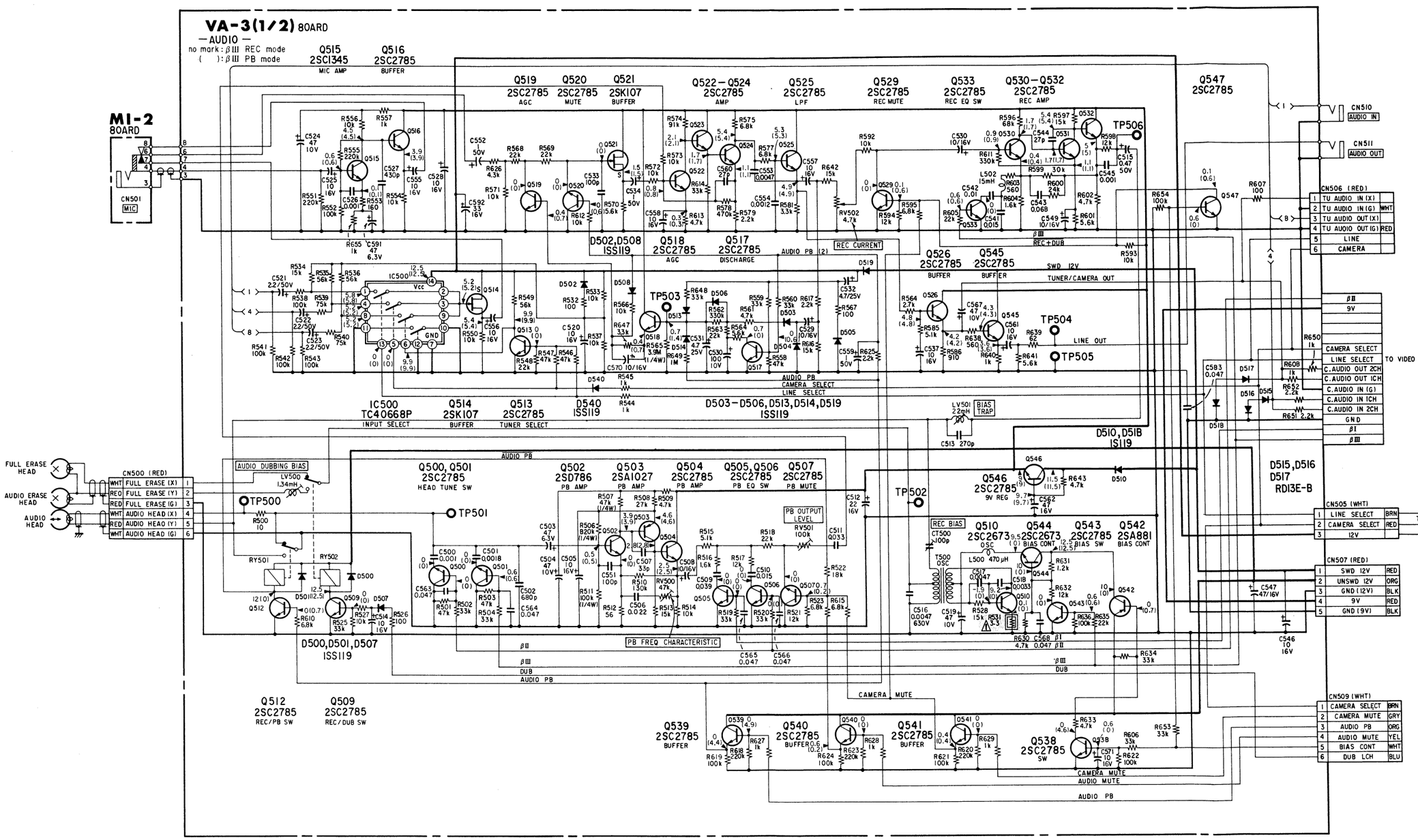

When indicating parts by reference number, please include the board name.

SEMICONDUCTOR

BX-1013-1
BX-1016
BX-1038
BX-3946-1
BX-3955
BX-3976
BX-3978
BX-3983
BX-3988

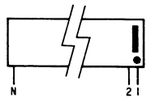

BX-1039

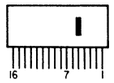

BX-3945-1

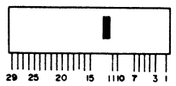

BX-3956-1

BX-3958-1

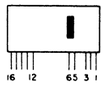

BX-3959-1

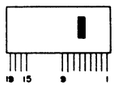

BX-3980

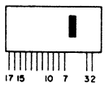

BX-3981

BX-3984

CX-761A

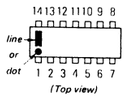

CX-864
CX-867

CX-866
CX-870A
HD14538BP
TC4051BP
TL494CN

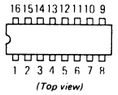

CX-866
CX-860

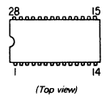

CX-868

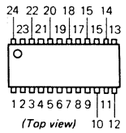

CX-885A
CX-194A-2

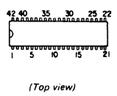

CX-892

CX-804

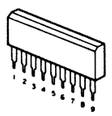

CX-7905A
MB3759

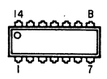

CX-20008
M51903L

SN74LS04N
TC4011BP
TC4013BP
TC4030BP
TC4066BP
TC4069UBP
TC4071BP
TC4081BP
TC40H004P
TC6026BP
μPC324C
μPC339C

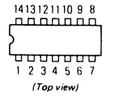

MB8747

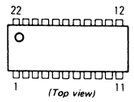

MB8758

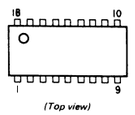

MB8845-527
MB8845-528
MB8845-549
MB8845-495M
μPD651G-517
μPD651G-518

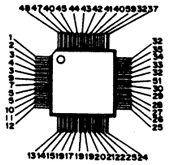

MSL915RS

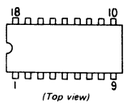

μPC393C

μPC1373H

μPC78M08H

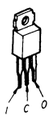

2SA881
2SA937

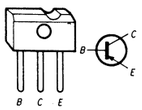

2SA1027R

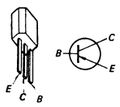

2SA1175

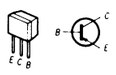

2SB733
2SB733-U2

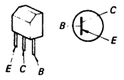

2SB772-P

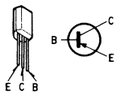

2SC403L

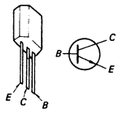

2SC1345
2SC536SP
2SD786

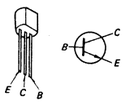

2SC1364

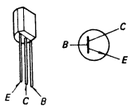

2SC1760

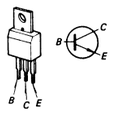

2SC1816

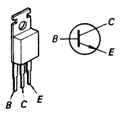

2SC1941

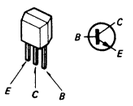

2SC2021

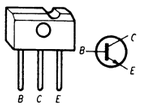

2SC2502

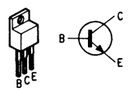

2SC2785

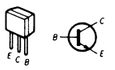

2SD773
2SD774

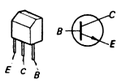

2SD1164

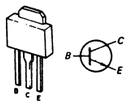

2SK107-3

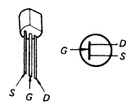

10E2
1S1585
1S8106
RD4.3E-B1
RD5.1E-B1
RD5.1E-B2
RD5.1E-B3
RD5.8E-B
RD9.1E-B
RD13E-B
RD15E-B3
RD18E-B
RD24E-B
RD36E-B

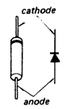

1S2348-1
ERA81-004
ERB81-004
S3V40

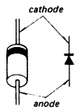

1SS119

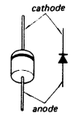

1SS133

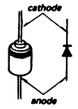

BR3402S
PG3432SY

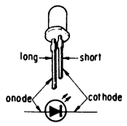

GH3F

PH302A
PH302B

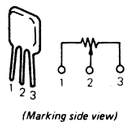

S1WB10

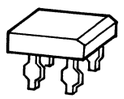

S5KC20

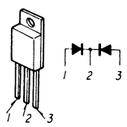

TUNER SCHEMATIC DIAGRAM
– UHF/VHF TUNER BT-664 –

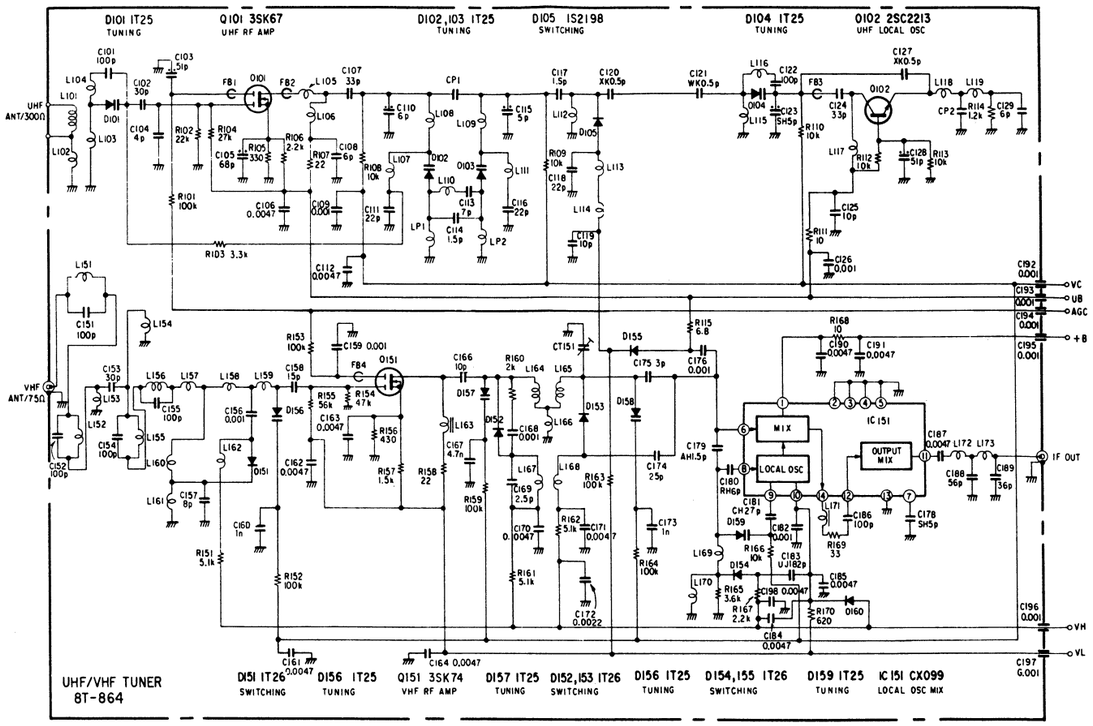

SS-10A (SYSTEM CONTROL) AND MB-3 (SWITCH) PRINTED WIRING BOARD

– Ref. No.SS-10A BOARD: 3000 series MB-3 BOARD: 4000 series –

SS-10A BOARD

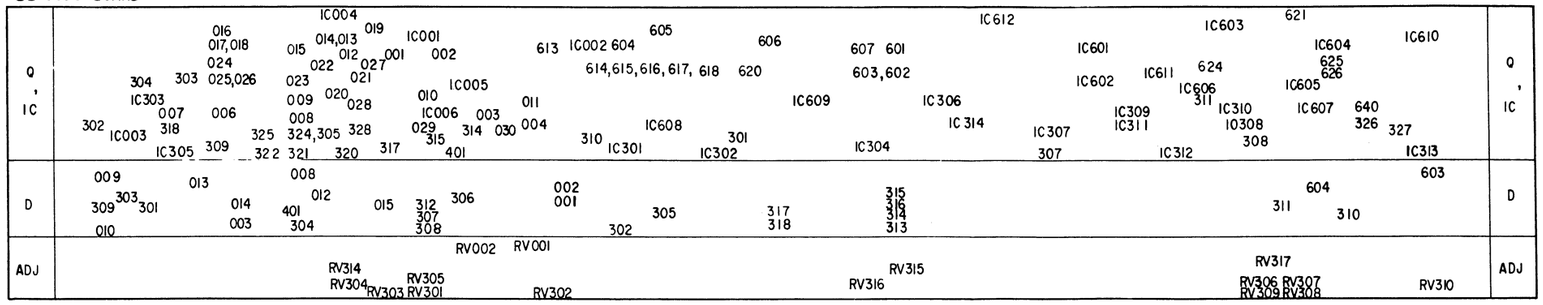

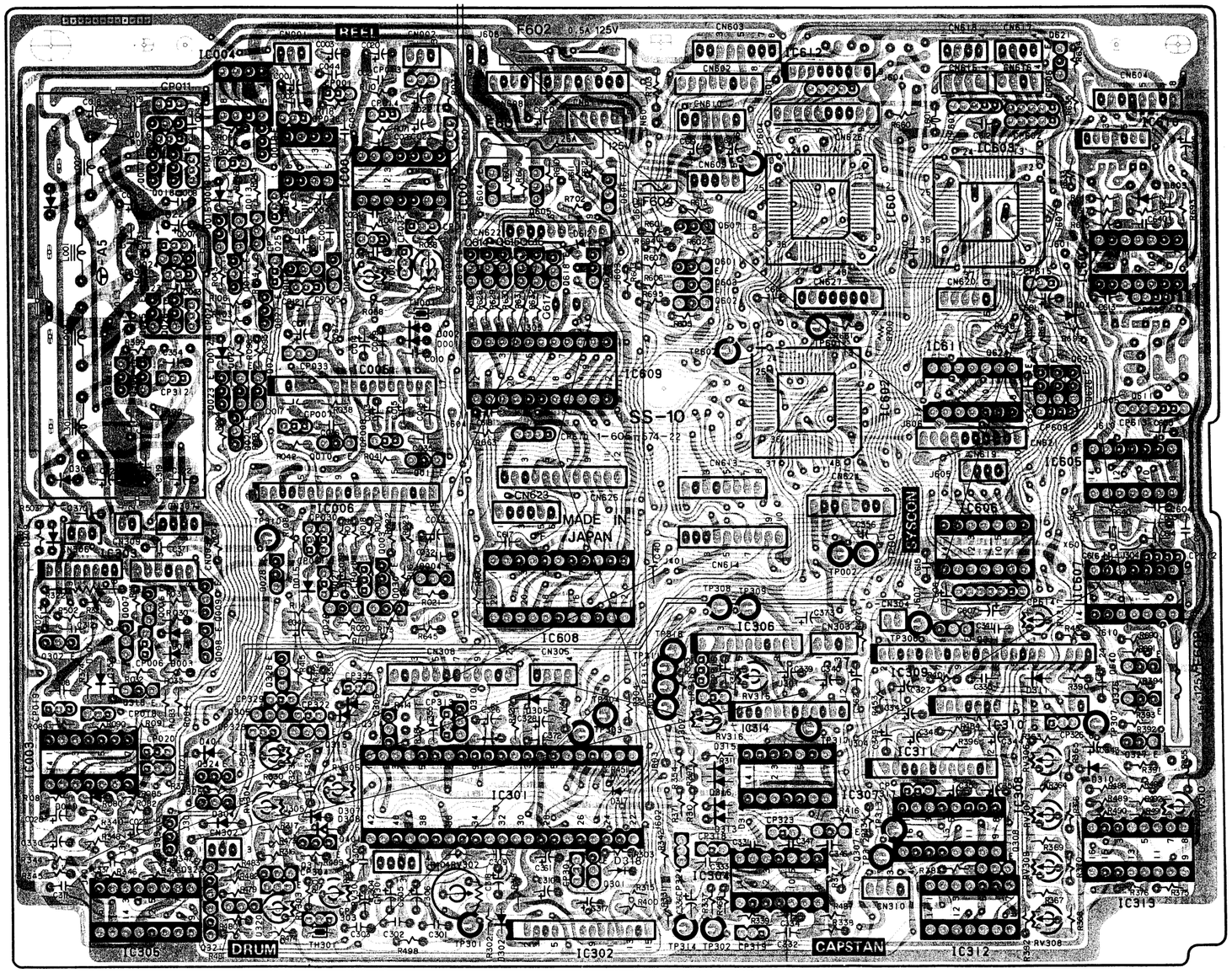

MB-3 BOARD

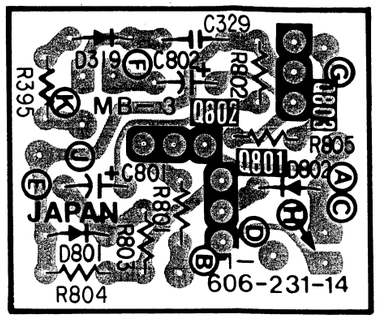

ARD

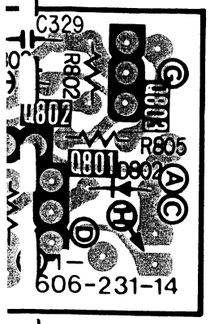

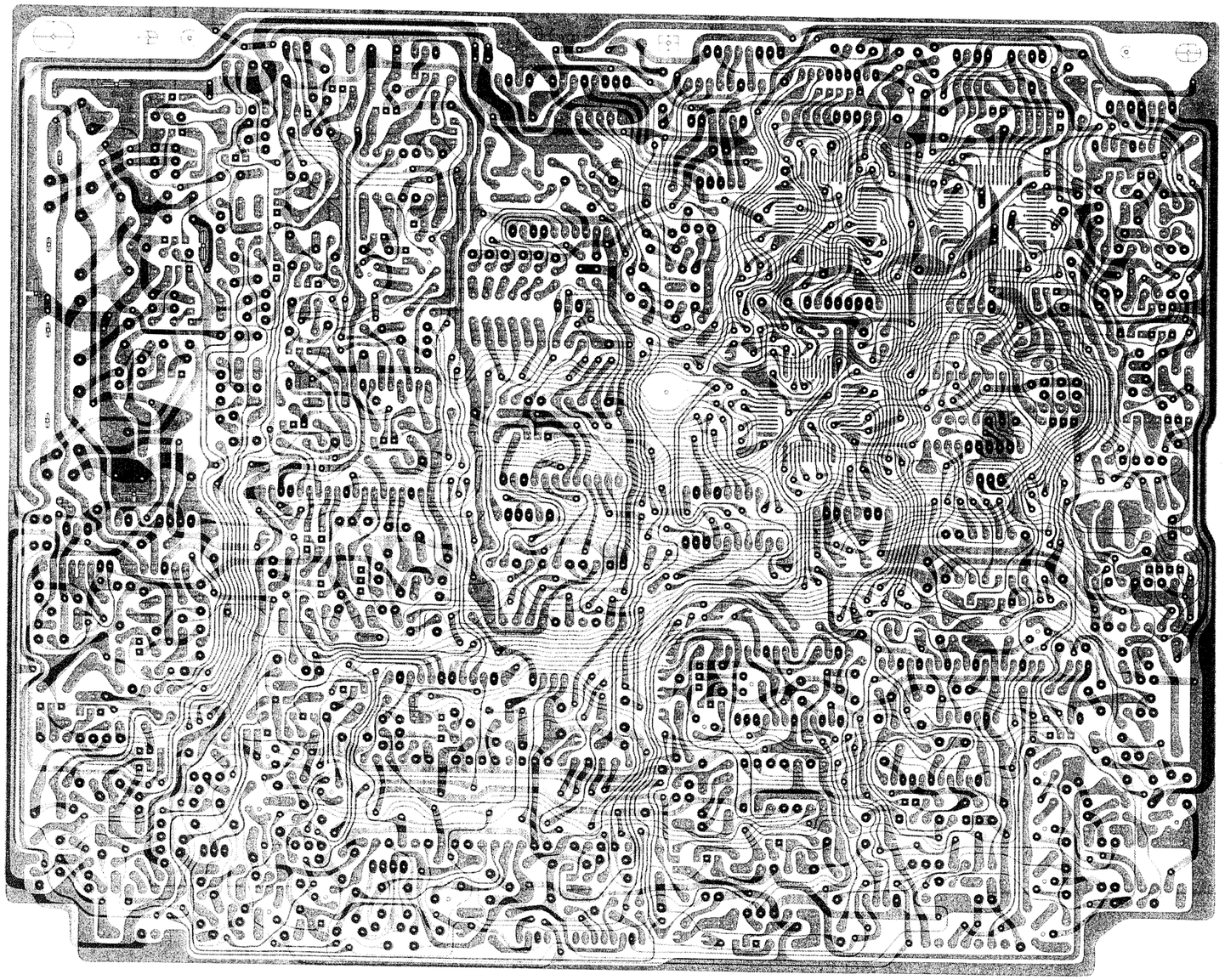

SS-10A(1/3) BOARD
(SYSTEM CONTROL)

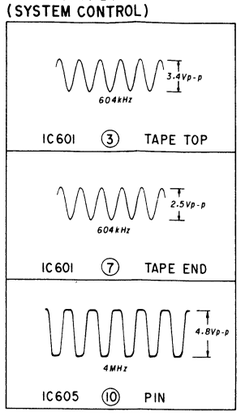

SS-10A (SYSTEM CONTROL) AND MB-3 (SWITCH) BOARD SCHEMATIC DIAGRAM — *Ref. No.SS-10A BOARD: 3000 series MB-3 BOARD: 4000 series* —

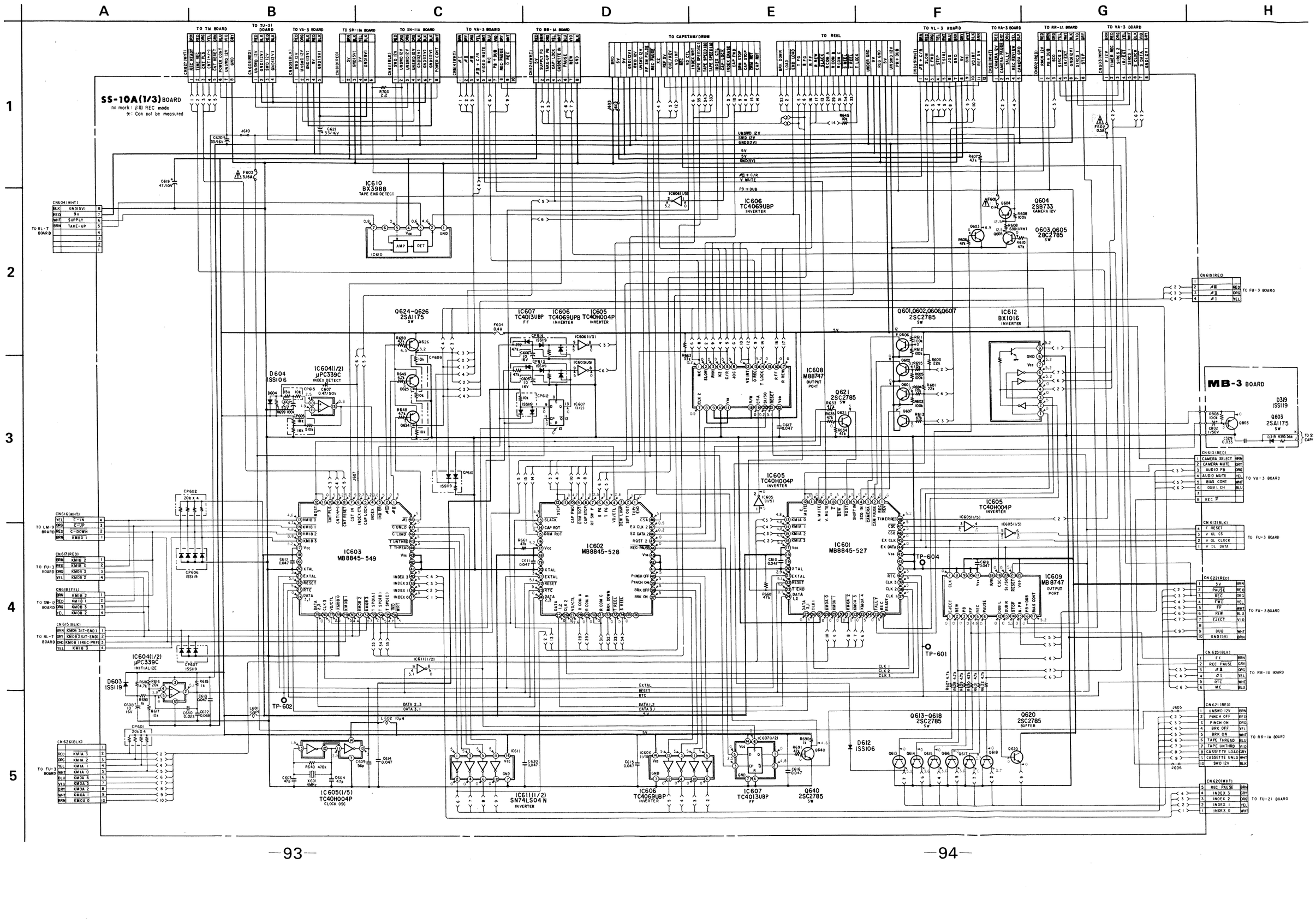

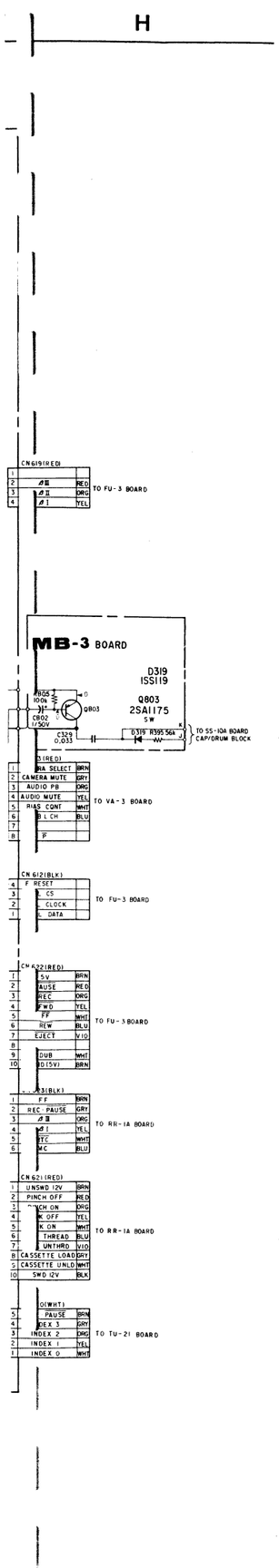

When indicating parts by reference number, please include the board name.

SS-10A (CAPSTAN & DRUM SERVO INDEX/REEL SERVO) PRINTED WIRING BOARD — *Ref. No.3000 series* —

SS-10A BOARD

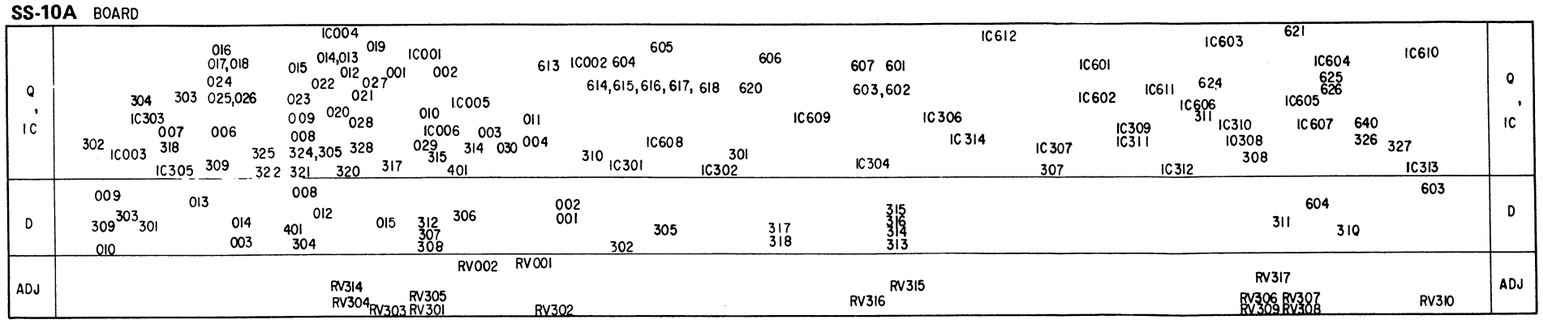

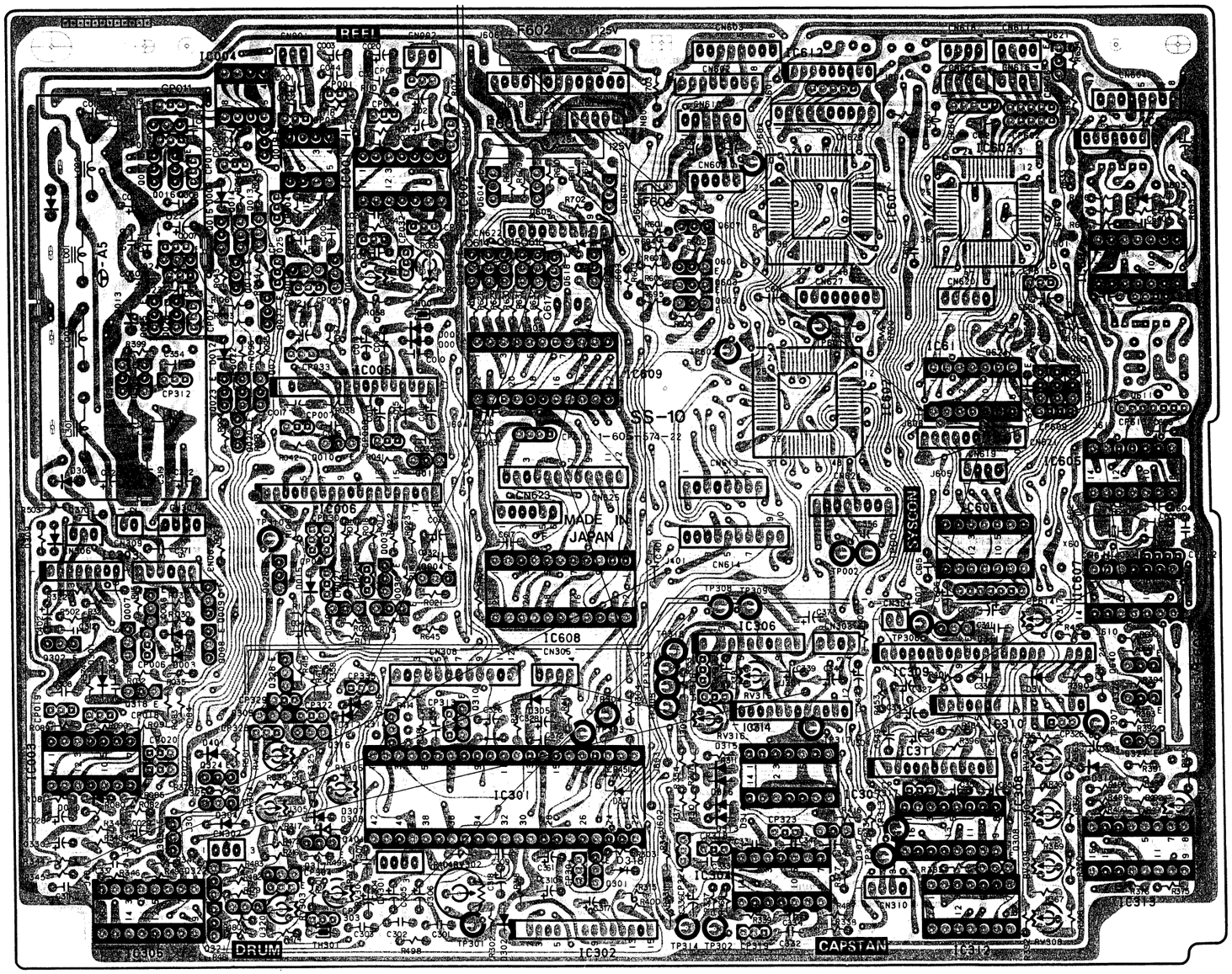

SS-10A(1/3) BOARD (CAP/DRUM)

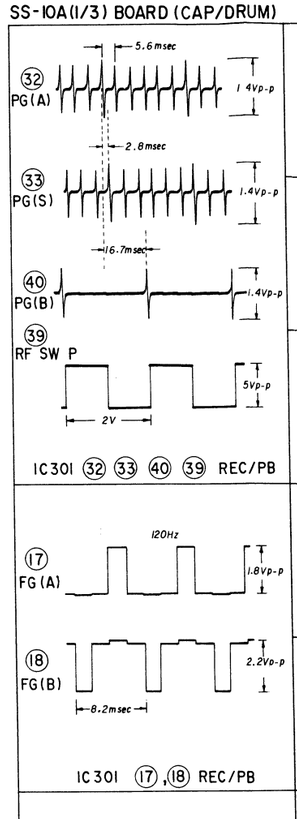

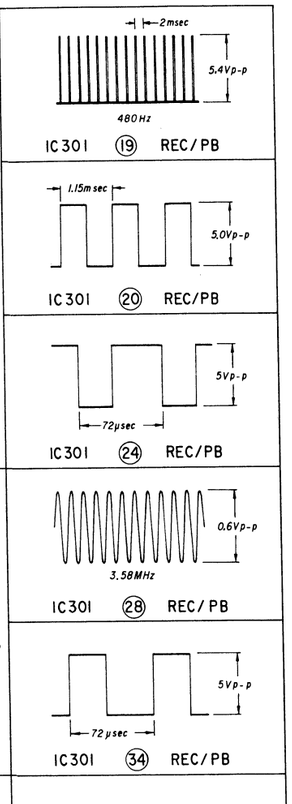

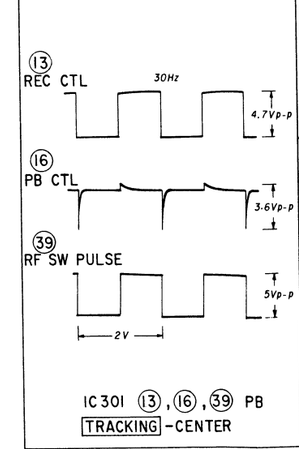

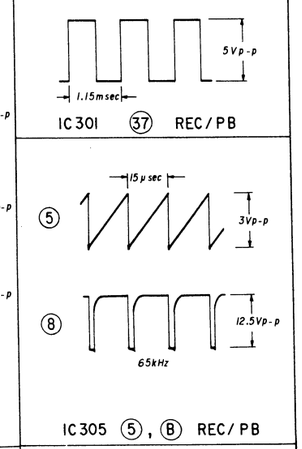

SS-10A(1/3) BOARD (REEL SERVO)

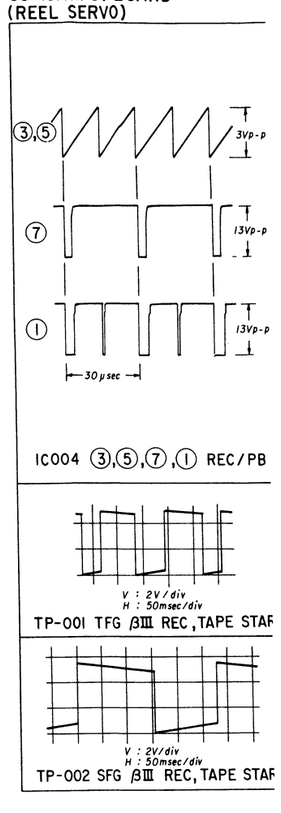

H

SS-10A(1/3) BOARD
REEL SERVO)

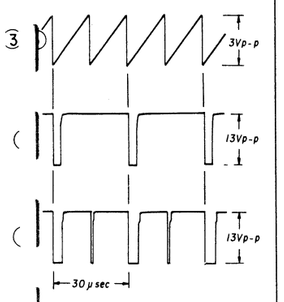

IC004 ③,⑤,⑦,① REC/PB

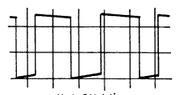

TP-001 TFG βIII REC, TAPE START

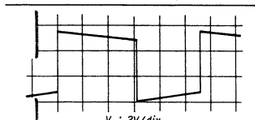

002 SFG βIII REC, TAPE START

A B C D E F G

1

2

3

4

5

CAPSTAN MOTOR PRINTED WIRING BOARD & SCHEMATIC DIAGRAM

– Ref. No.5100 series –

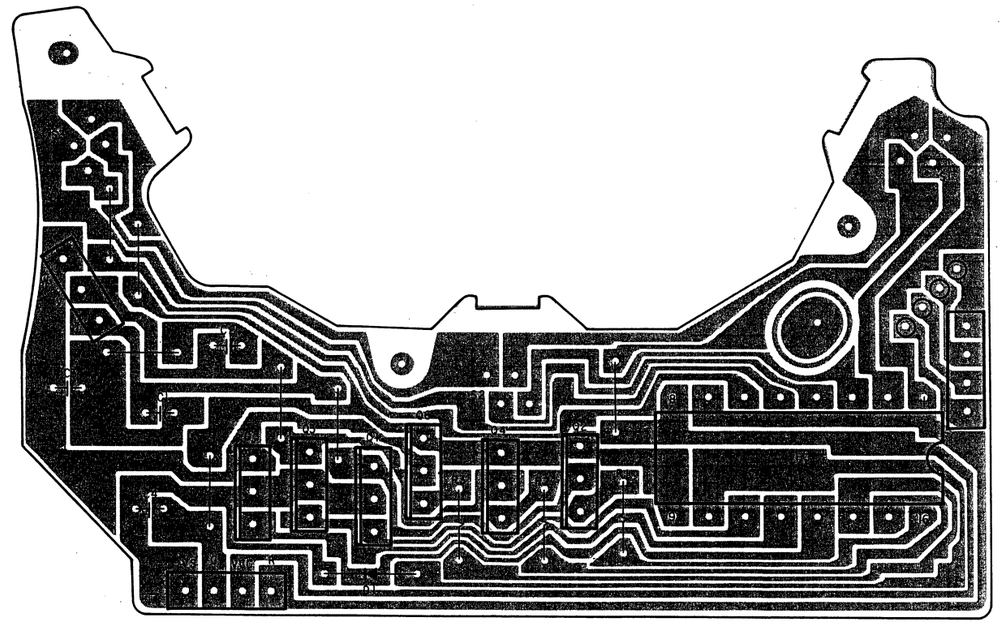

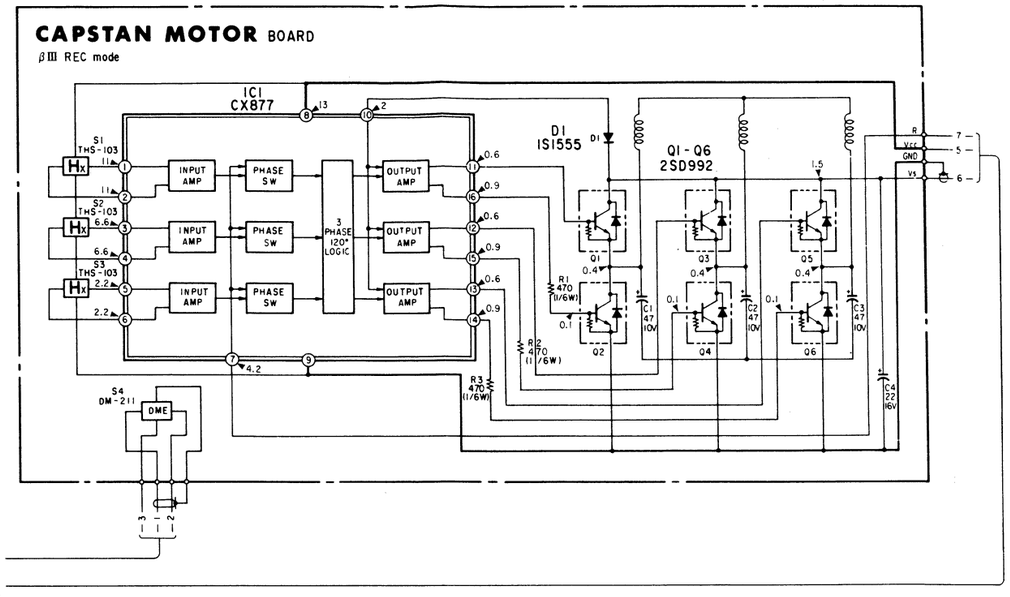

REEL MOTOR PRINTED WIRING BOARD & SCHEMATIC DIAGRAM

– Ref. No.5500 series –

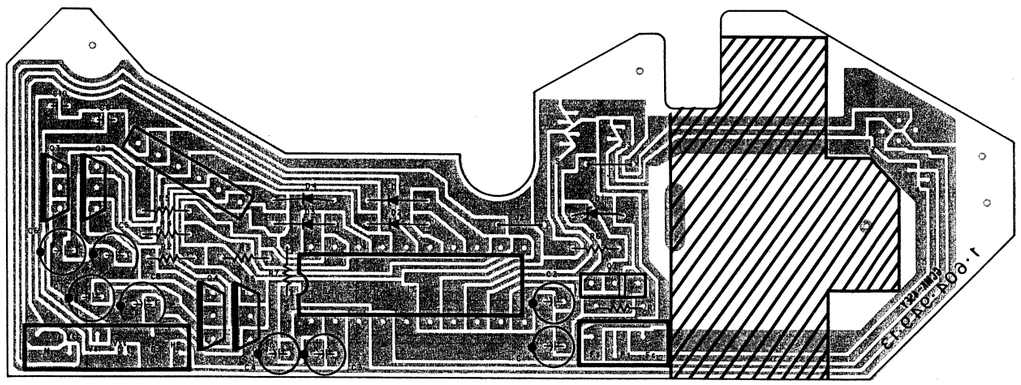

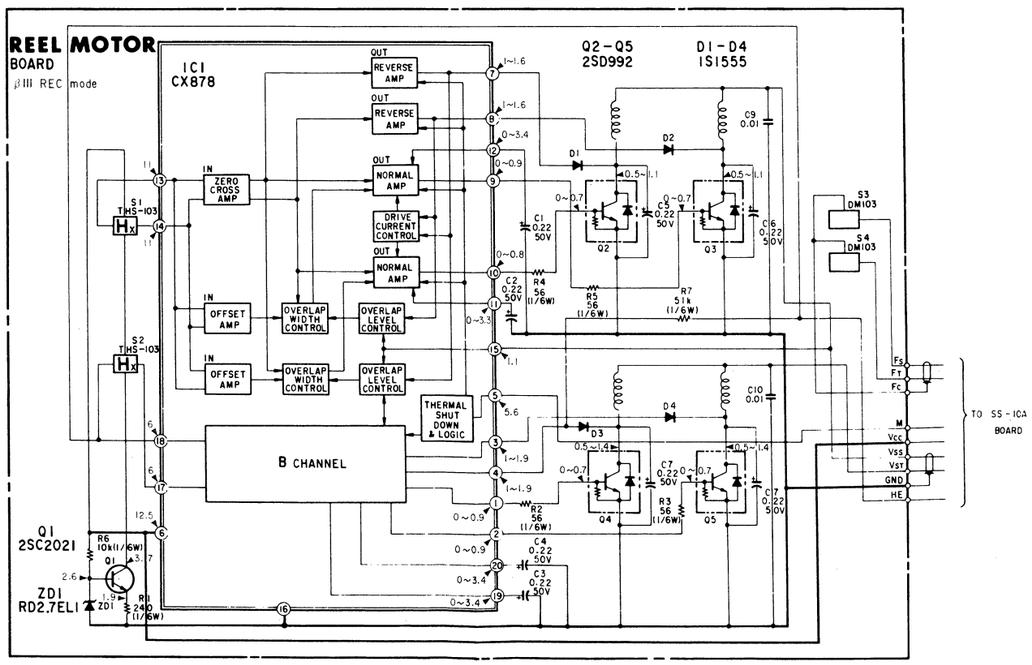

SS-10A (CAPSTAN & DRUM SERVO INDEX/REEL SERVO) BOARD SCHEMATIC DIAGRAM — *Ref. No.3000 series* —

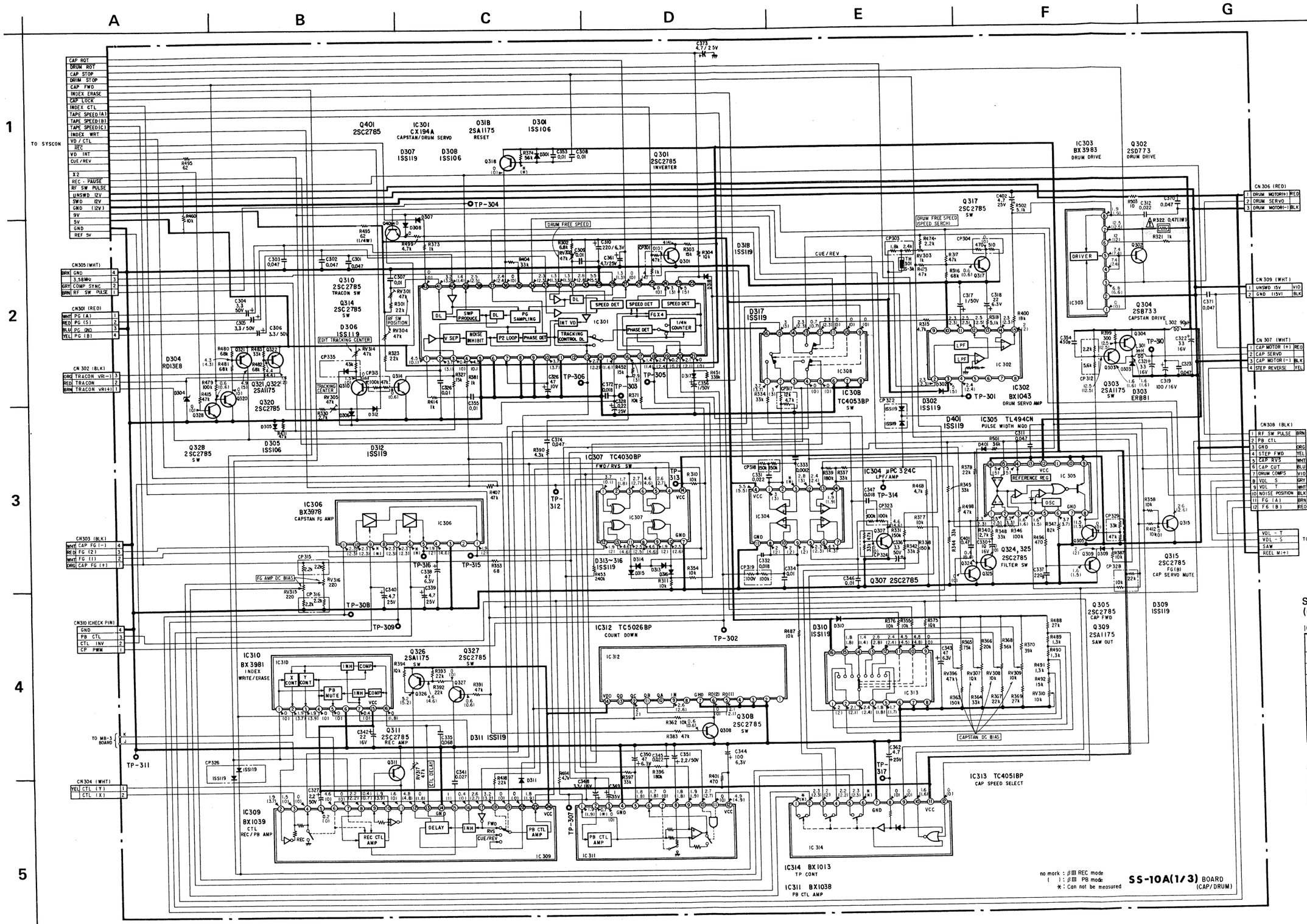

SS-10A (1/3) BOARD (CAPSTAN/DRUM SERVO)

IC313

PIN / MODE	1	2	3	4	5	6	7	8
X2 (βII)/βI	2	2.1	2.8	1.8	1.7	GND	GND	GN
X2 (βIII)	2	2.1	1.4	1.8	1.7			
βII	2	2.1	1.8	1.8	1.7			
βIII	2	2.1	2.4	1.8	1.7			
CUE (βII)	2	2.1	2	1.8	1.7			
CUE (βIII)	2	2.1	1.8	1.8	1.7			
REV (βII)	2	2.1	2.1	1.8	1.7			
REV (βIII)	2	2.1	1.9	1.8	1.7			

βIII REVERSE (X1) MODE

IC307

PIN	1	2	3	4	5	6	7	E
VOLTAGE	0.1	1.9	2.7	2.7	0.1	2.7	GND	0

SS-10A (1/3) BOARD (REEL SERVO)

IC006

PIN / MODE	FWD/ VIDEOLA (FWD)	VIDEOLA (REVERSE)	FF
1	0	0	0
2	0	0	5
3	0	5	0

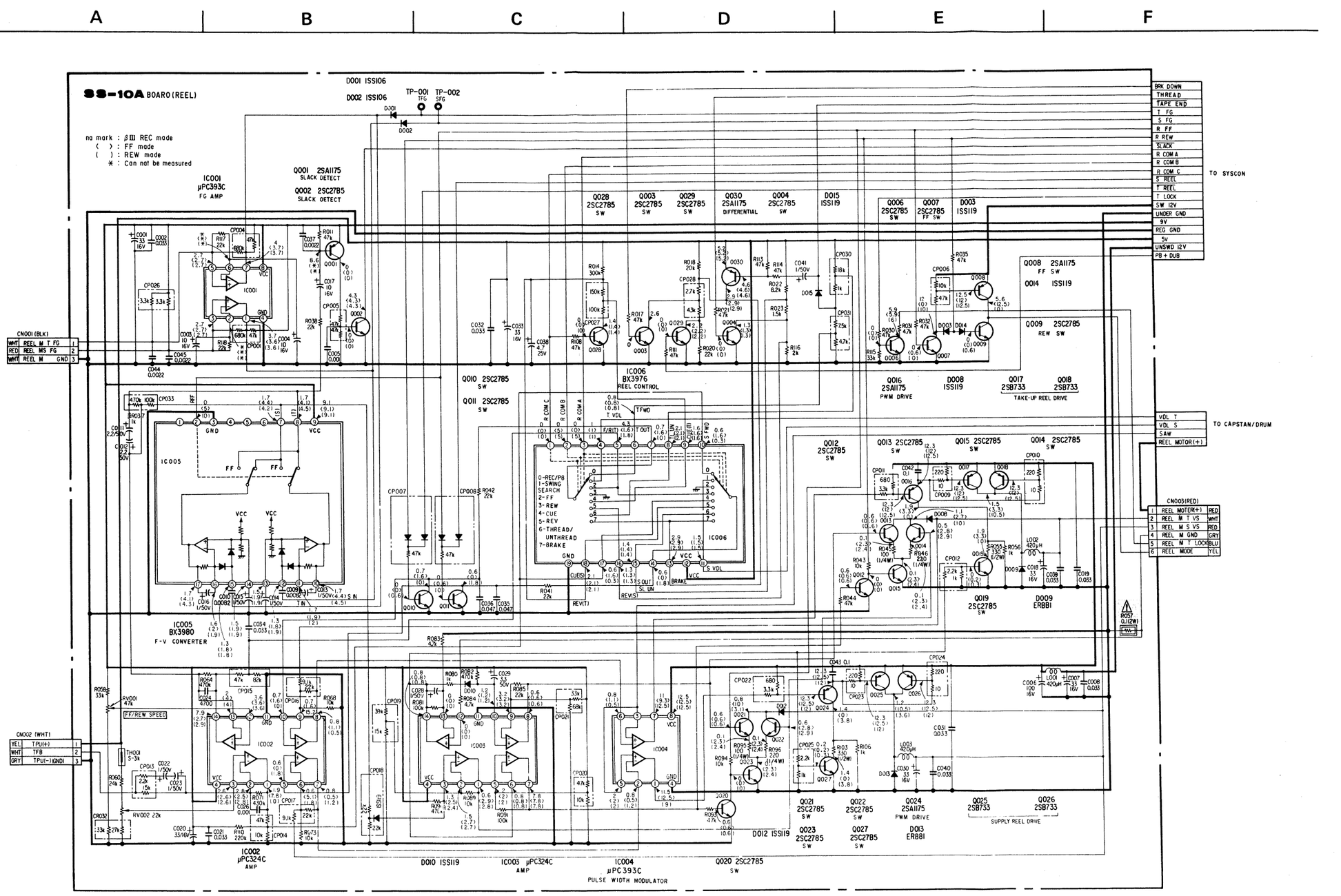

E ARD
DRUM SERVO)

2	3	4	5	6	7	8	9	10	11	12	13	14	15	16
2.	2.8	1.8	1.7	GND	GND	GND	0	0	0	2.5	2.8	1.4	1.8	5.5
2.1	1.4	1.8	1.7				0	0	4.5	2.5	2.8	1.4	1.8	5.5
2.1	1.8	1.8	1.7				0	4.8	0	2.5	2.8	1.4	1.8	5.5
2.	2.4	1.8	1.7				0	4.8	4.5	2.4	2.8	1.4	1.8	5.5
2.	2	1.8	1.7				4.8	0	0	2.5	2.8	1.4	1.8	5.5
2.	1.8	1.8	1.7				4.8	0	4.5	2.5	2.8	1.4	1.8	5.5
2.1	2.1	1.8	1.7				4.8	4.8	0	2.5	2.8	1.4	1.8	5.5
2.1	1.9	1.8	1.7				4.8	4.8	4.5	2.5	2.8	1.4	1.8	5.5

: (...) MODE

2	3	4	5	6	7	8	9	10	11	12	13	14
1.	2.7	2.7	0.1	2.7	GND	0.1	2	2.4	2.4	2	0	5.2

BOARD
/O)

WD	VIDEO/LA (REVERSE)	FF	REW	CUE	REV	THREADING/ UNTHREADING	E-E
WD)							
0	0	0	0	5	5	5	5
0	0	5	5	0	0	5	5
0	5	0	5	0	5	0	5/0

When indicating parts by reference number, please include the board name.

VL-3 (SLOW SERVO) PRINTED WIRING BOARD — *Ref. No.6000 series* —

A B C D E F G H

1 2 3 4 5

VL-3 BOARD

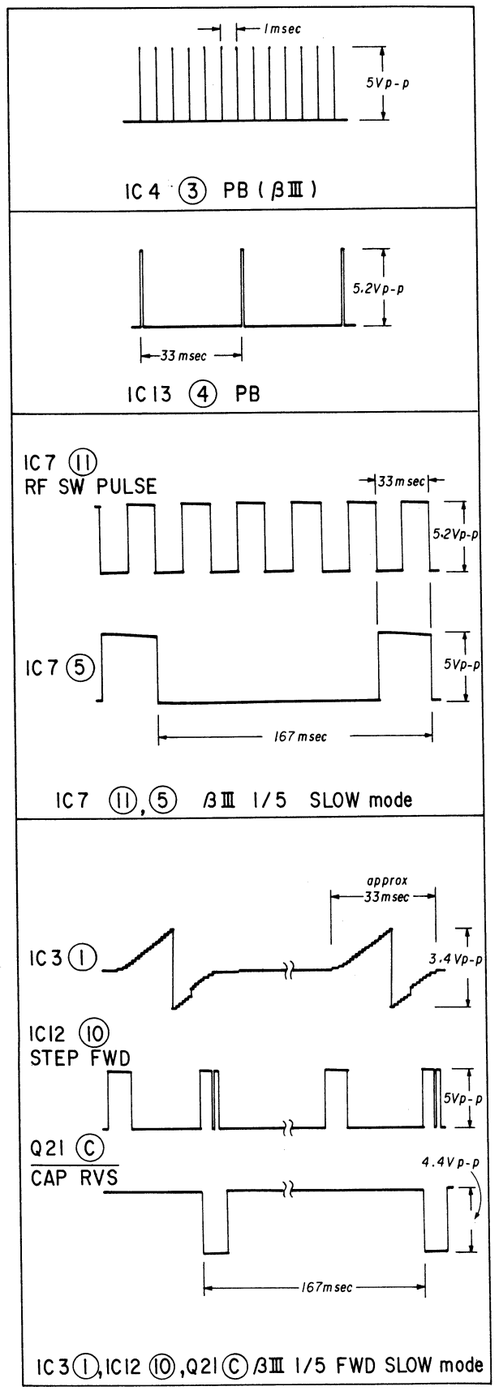

VL-3 BOARD

Q, IC	23 24 IC9 26 27 21 5 35 36 IC1 18 12 13 30 16 32 7 IC4 IC2 33 IC10 IC11 21 25 8 10 9 IC8 20 19 IC3 3 4 IC7 37 22 34 IC14 IC6 31 17 28 IC13 15 14 IC12 IC5 6 29
D	3 4 7 5 6 15 13 14 10 9
ADJ	RV14 RV2 RV9 RV8 RV1 RV6 RV18 RV7 RV13 RV16 RV4 RV5 RV12 RV3 RV10 RV17 RV15 RV11

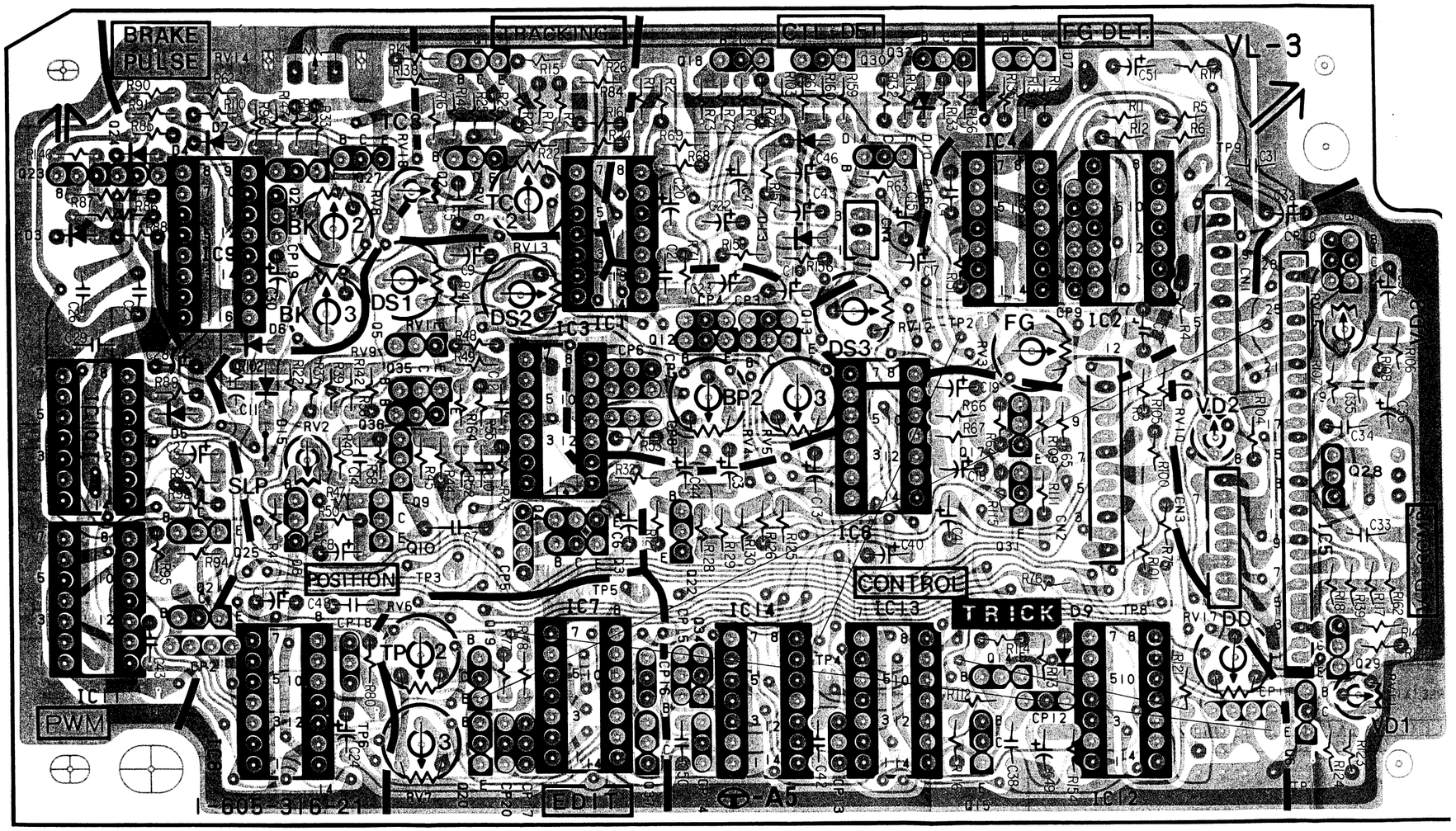

H I

33 28 29	Q , IC
	D
RV15 RV11	ADJ

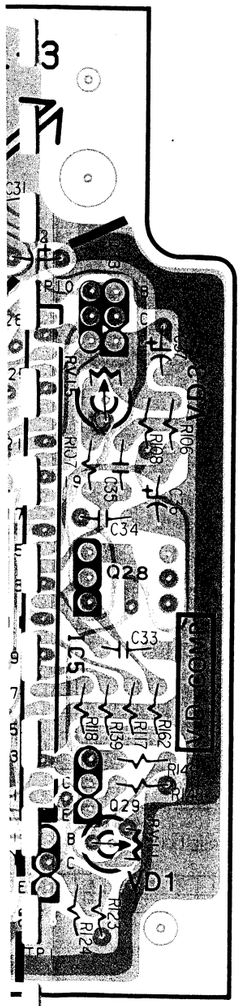

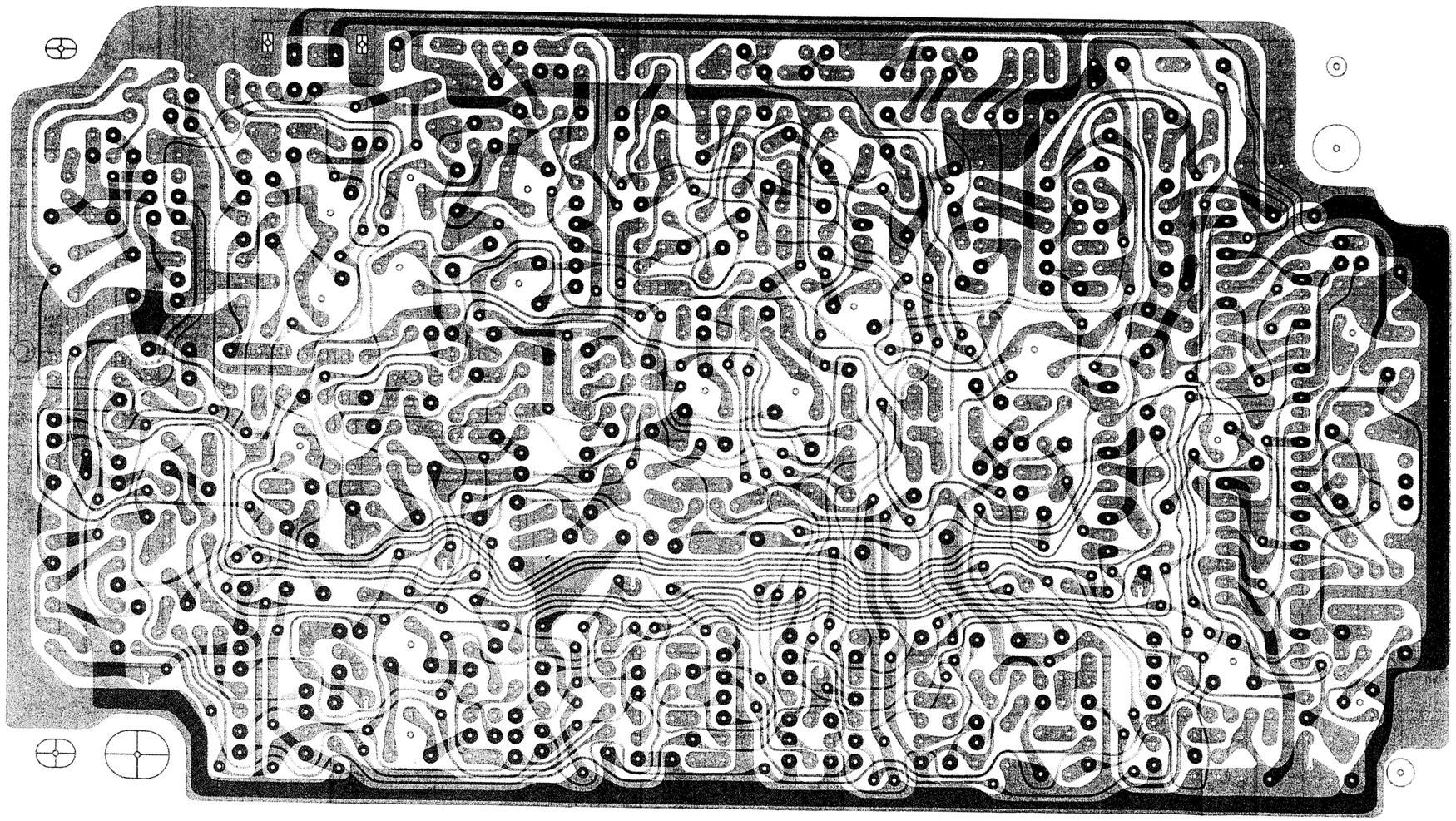

VL-3 (SLOW SERVO) BOARD SCHEMATIC DIAGRAM

— Ref. No.6000 series —

VL-3 BOARD
βIII XI REVERSE MODE

IC \ PIN	1	2	3	4	5	6	7	8	9	10	11	12	13	14
IC3	1.6	0.3	2.9	5.2	1.7	3.3	0	2.4	1.6	1.3	GND	1.6	1.1	2.5
IC6	2.4	2.4	2.4	0.9	0	0	GND	0	0	0	G	5.2	5.2	5.2
IC8	5.2	5.2	5.2	0	0	0	GND	0	0	0	0	5.2	0	5.2
IC12	0	5.2	0	0	0	0	GND	0	0	0	0	0	5.2	5.2
IC13	0.6	0	5.2	0.2	4	4	GND	5.2	0	5.2	5.2	0	0	5.2
IC14	0	5.2	2.5	2.6	0.6	5.2	GND	5.1	0	0	5.1	5.2	0.1	5.2

PIN	1	2	3	4	5	6	7	8	9	10	11	12	13	14	15	16	17	18	19	20	21	22	23	24	25	26	27	28
IC5	3.6	3.2	5.2	2.9	—	2.6	0.3	0	5	0	0	0.1	2.6	0	5.2	GND	0.2	0	GND	0	0.6	2.9	3.3	3	4.5	0	1.9	4.6

	3	4	14	15	21	28	29	36
B	0	0	4.6	4.6	0.6	3.7	3.7	4.5
C	2.4	2.9	1.8	1.7	0	1.9	4.2	2.9
E	2.9	2.4	5.2	5.2	GND	3.7	4.2	5.2

VL-3 BOARD
βIII CUE/REV MODE

IC5

MODE \ PIN	1	2	3	4	5	6	7	8	9	10	11	12	13	14	15	16	17	18	19	20	21	22	23	24	25	26	27	28
CUE	3.6	3.2	5.2	0/3	3.1	2.7	0.3	0	0	0	5.2	4.6	2.6	4.7	5.2	GND	4.2	0.8	GND	0	0.6	3	3.4	4.7	3.1	0	2.1	4.6
REV	3.6	3.2	5.2	0/3	3.1	2.7	0.3	0	5	0	5.2	0	2.6	4.7	5.2	GND	4.2	0.8	GND	0	0.6	3	3.4	4.7	3.2	0	2.1	4.6

Q / MODE	Q28			Q29		
	B	C	E	B	C	E
CUE	3.7	2.1	3.8	3.7	3.7	4.2
REV	3.7	2.1	3.8	3.7	3.7	4.2

VL-3 BOARD
βIII 1/5 FWD SLOW MODE

IC \ PIN	1	2	3	4	5	6	7	8	9	10	11	12	13	14	15	16
IC1	3	2.3	3	5.2	0.7	0.9	0.8	*	2.3	2.2	GND	1.2	1.4	1.4		
IC2	*	1.8	*	5.2	2.4	2.7	*	*	2.2	2.4	GND	1.7	2.2	*		
IC3	1.5	*	0.4	GND	1.5	3.3	0	2.4	1.6	1.3	GND	1.6	1.1	3.7		
IC4	*	*	0	*	*	*	GND	*	0.4	*	*	*	*	5.2		
IC6	2.4	0.8	0.8	0.8	4.6	4.6	GND	0	0	0	0	0	0	5.2		
IC7	0.9	4.3	0	0.2	1	0	GND	0	5	0	2.6	0	5.2	5.2		
IC8	0	0	0	0.2	4.6	0.2	GND	4.6	4.6	5	0	0	0.9	5.2		
IC9	GND	3.2	5.2	GND	0	0.9	4.3	0	5	0.2	0.9	*	3.8	3.7	GND	5.2
IC10	1	0	5.2	5.2	0	0	GND	3.9	5	0.2	5	0.2	5.2	5.2		
IC11	0.2	0.9	5	4.4	0.9	5	GND	0.9	4.4	5	0.4	5	5	5.2		
IC12	0.7	4.3	0	0.4	0.3	0.3	GND	5	0.4	0.4	0	0.8	0.2	5.2		
IC13	4.6	0.8	4.3	0	4.2	4.2	GND	5.2	4.6	0	5.2	4.6	0	5.2		
IC14	5	0	2.5	2.6	4.6	0.2	GND	5.1	0	0	5.1	0	4.6	5.2		

IC \ PIN	1	2	3	4	5	6	7	8	9	10	11	12	13	14	15	16	17	18	19	20	21	22	23	24	25	26	27	28
IC5	3.6	3.1	5.2	1.8	3	0.6	0.3	1	5	5	0	4.6	2.6	0	5.2	GND	0.2	0	GND	1	0.6	3.8	3.8	3.5	3.2	0	2.3	4.6

Q	1	2	3	4	5	6	7	8	9	10	11	12	13	14	15	16	17	18	19	20	21	22	23	24	25	26	27	28	29	30	31	32	33	34	35	36
B	4.6	0.6	0	0	4.6	0	*	0	0	3.4		0	0.6	4.6	4.6	5.2	1.8	0	0	3.4	0	4.2	4.7	0	0.1	4.6	4.7	3.7	3.8	0	0.6	*				*	*
C	1.2	0	0.8	0.4	5.2	0.9	*	*	0.5	0.4		1.1	0	4.5	5.2	5.2	3.3	4.2	2.3	4.6	4.1	1.8	1.6	0.1	0	5.2	2.9	2.3	3.8	0	1.1	*				*	0.4
E	1.2	GND	0.4	0.8	5.2	GND	5	GND	GND	1.6		GND	GND	5.2	5.2	4.6	1.3	GND	5.2	5.2	GND	3.3	5.2	GND	GND	5.2	5.2	3.8	4.2	GND	1.2	2				5	5.2

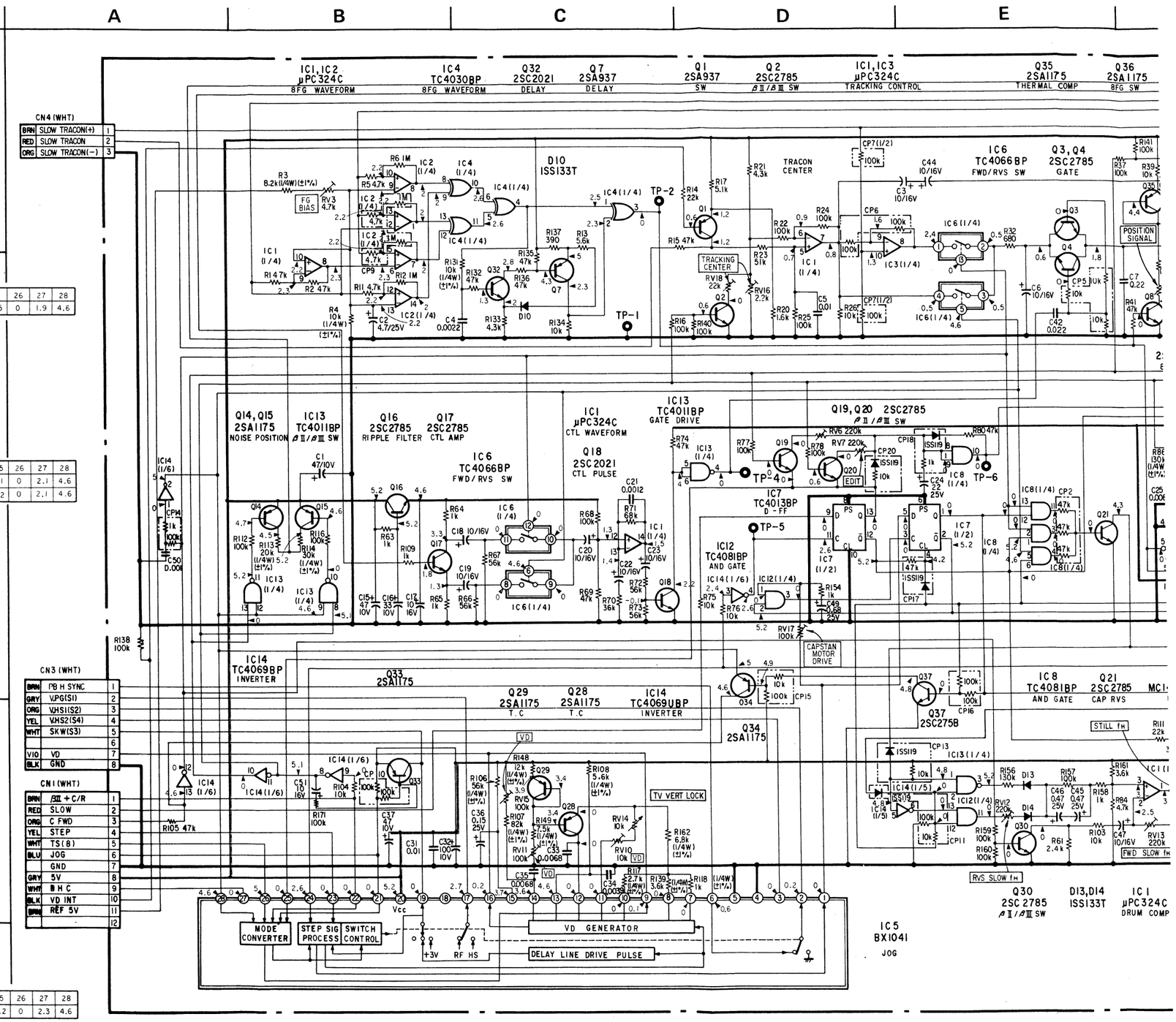

B C D E F G H

1 2 3 4 5

IC1,IC2 μPC324C 8FG WAVEFORM
IC4 TC4030BP 8FG WAVEFORM
Q32 2SC2021 DELAY
Q7 2SA937 DELAY
Q1 2SA937 SW
Q2 2SC2785 βII/βIII SW
IC1,IC3 μPC324C TRACKING CONTROL
Q35 2SA1175 THERMAL COMP
Q36 2SA1175 8FG SW
Q5 2SA1175 βII/βIII SW
IC3 μPC324C BRAKE POSITION
IC6 TC4066BP FWD/RVS SW
Q3,Q4 2SC2785 GATE
Q8 2SC2785 8FG SW
Q9 2SC2785 SW
Q10 2SA1175
Q14,Q15 2SA1175 NOISE POSITION
IC13 TC4011BP βII/βIII SW
Q16 2SC2785 RIPPLE FILTER
Q17 2SC2785 CTL AMP
IC1 μPC324C CTL WAVEFORM
Q18 2SC2021 CTL PULSE
IC13 TC4011BP GATE DRIVE
Q19,Q20 2SC2785 βII/βIII SW
IC7 TC4013BP D-FF
IC12 TC4081BP AND GATE
Q23 2SA1175 βII/βIII SW
Q24 2SC2785 SW
D3,D4,D5 ISS133T
Q25 2SC2785 SW
Q26,Q27 2SA1175 βII/βIII SW
D6 ISS133T
IC14 TC4069BP INVERTER
Q33 2SA1175
Q29 2SA1175 T.C
Q28 2SA1175 T.C
IC14 TC4069UBP INVERTER
Q34 2SA1175
IC8 TC4081BP AND GATE
Q21 2SC2785 CAP RVS
IC9 MC14538BCP PWM
D9 ISS133T
IC10 TC4011BP PWM/FF
IC11 TC4011BP DRIVE & BRAKE
IC9 MC14538BCP BRAKE MM
IC12 TC4081BP CAPSTAN CONT
Q37 2SC2758
IC12 TC4081BP GATE
Q30 2SC2785 βI/βIII SW
D13,D14 ISS133T
IC1 μPC324C DRUM COMP
Q31 2SA1175 GATE
Q6 2SC2785 T REEL CONT
Q22 2SA1175 S REEL CONT
IC5 BX1041 JOG

TP-1 TP-2 TP-3 TP-4 TP-5 TP-6 TP-7 TP-8 TP-9

FG BIAS
TRACON CENTER
TRACKING CENTER
POSITION SIGNAL
βII/βIII TRACKING
BRAKE POSITION
BRAKE WIDTH
BRAKE TIME βII/βIII
CAPSTAN MOTOR DRIVE
TV VERT LOCK
STILL fH
FWD SLOW fH
RVS SLOW fH
EDIT

MODE CONVERTER
STEP SIG PROCESS
SWITCH CONTROL
VD GENERATOR
DELAY LINE DRIVE PULSE
+3V
RF HS
Vcc

CN2 (BLK)

1	RF SW PULSE	BRN
2	PB CTL	
3	GND	ORG
4	STEP FWD	YEL
5	CAP RVS	WHT
6	CAP CUT	BLU
7	DRUM COMPS	VIO
8	VDL S	GRY
9	VDL T	WHT
10	NOISE POSITION	BLK
11	FG (A)	BRN
12	FG (B)	RED

		35	36
		*	*
		*	0.4
		5	5.2

nc mark : βIII PB mode

VL-3 BOARD

When indicating parts by reference number, please include the board name.

SW-12 (SWITCH TRACKING CONTROL) PRINTED WIRING BOARD — *Ref. No.7500 series* —

SW-12 BOARD

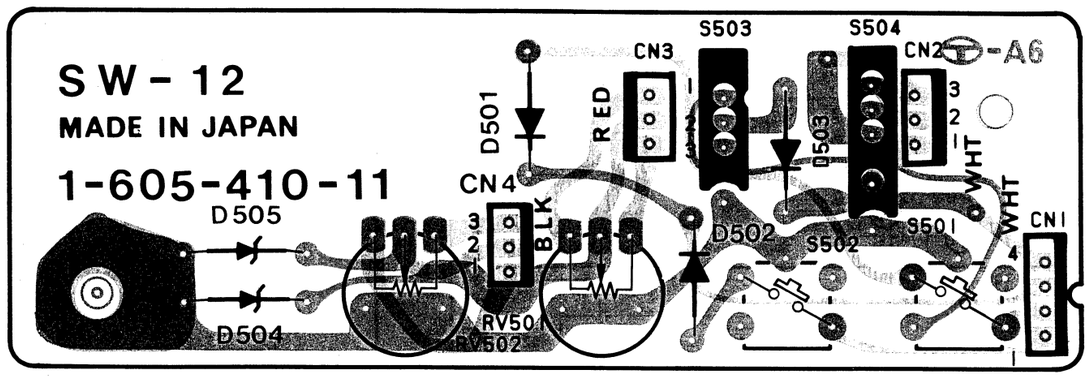

SCHEMATIC DIAGRAM

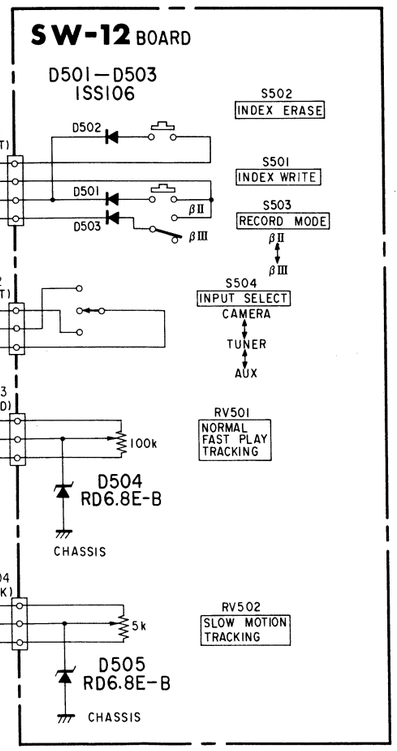

When indicating parts by reference number, please include the board name.

FU-3 (FUNCTION SWITCH INDICATOR) PRINTED WIRING BOARDS — *Ref. No.7100 series* —

FU-3 BOARD

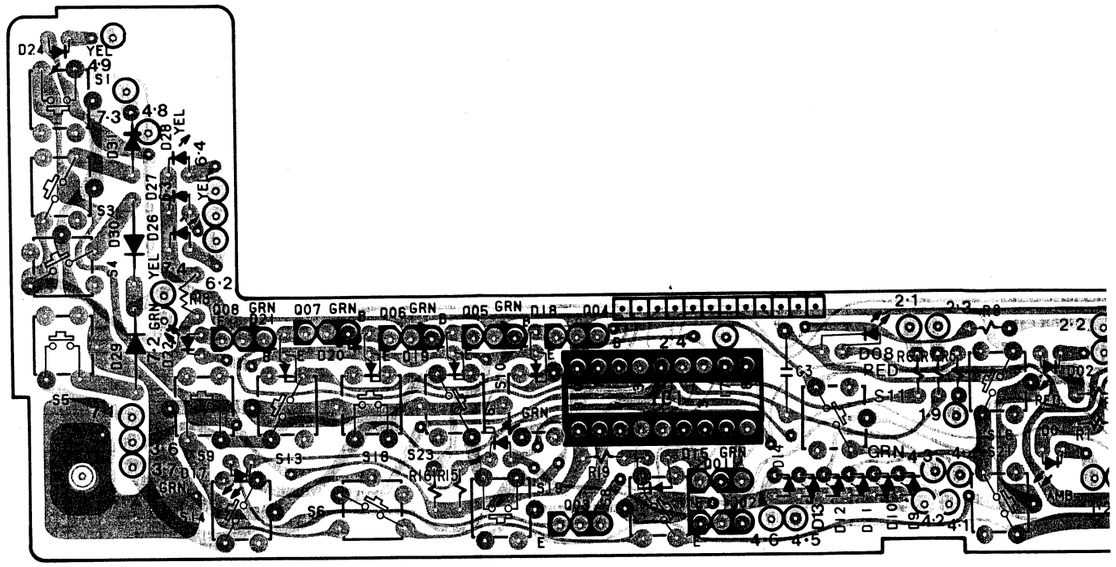

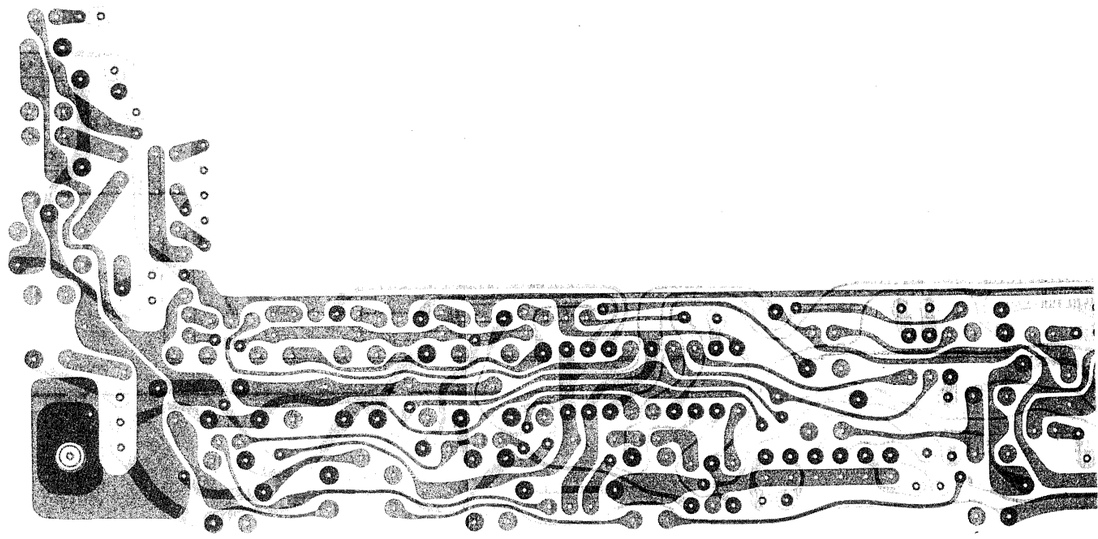

A B C D E F G

FU-3 BOARD

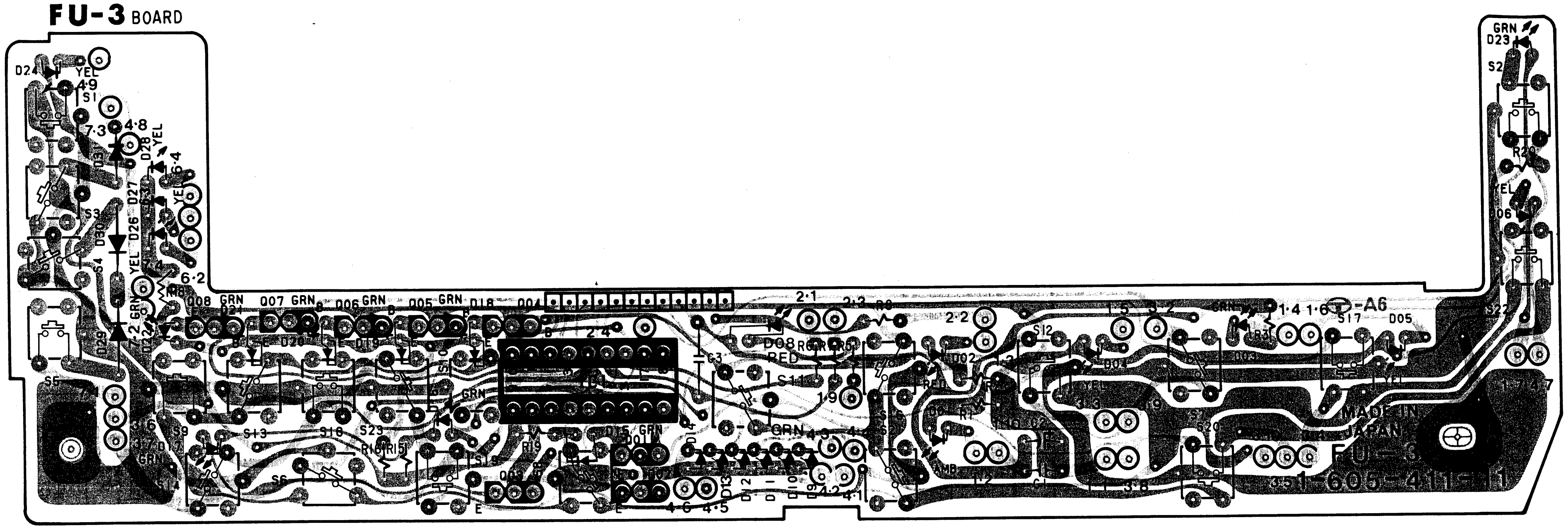

Q·IC	08 07 06 05 04 03 IC1 01 02
D	24 31 30 29 28 27 26 22 17 21 20 19 16 18 15 14 13 12 11 10 9 08 02 01 04 03 05 23 06

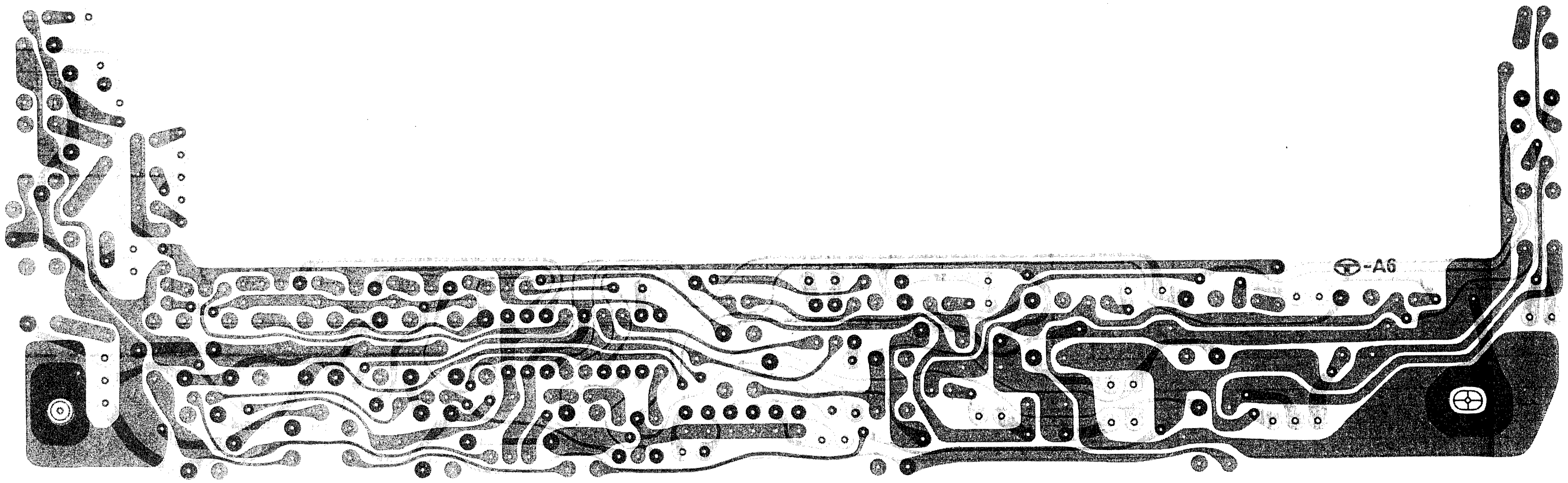

FU-3 (FUNCTION SWITCH INDICATOR) BOARD SCHEMATIC DIAGRAM — *Ref. No.7100 series* —

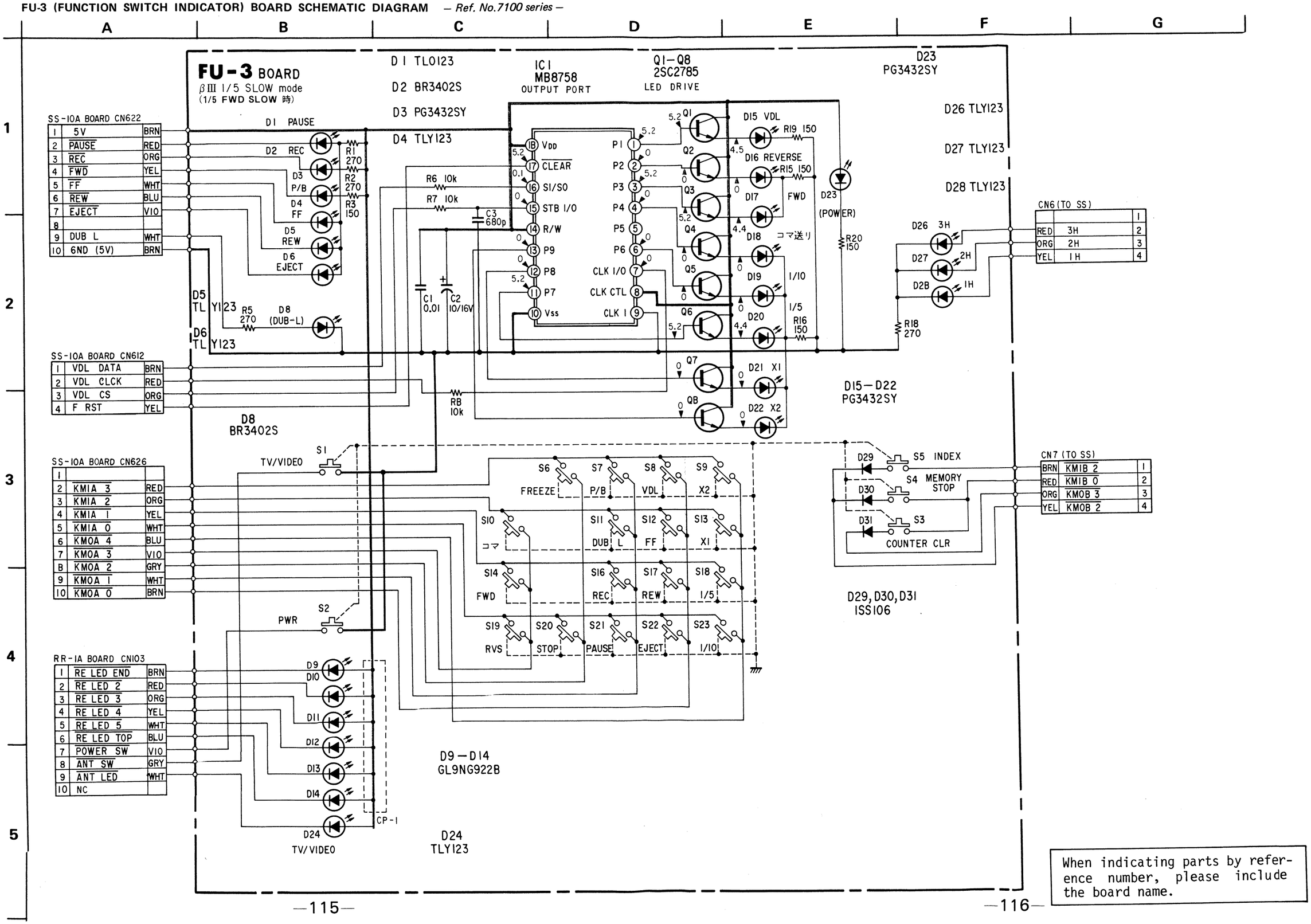

When indicating parts by reference number, please include the board name.

A B C D E F G

1 2 3 4 5

RR-1A BOARD

Q, IC	108 102 103 104 105 101 106 204 IC101 203 IC201 IC001 309 310 311 312 332 302 304 308 306 301,313 303 307 305 315 314 316	Q, IC
D	102 001 201 308 307 306 319 312 311 315 316 305 310 309 317,301 313 318,302 314	D

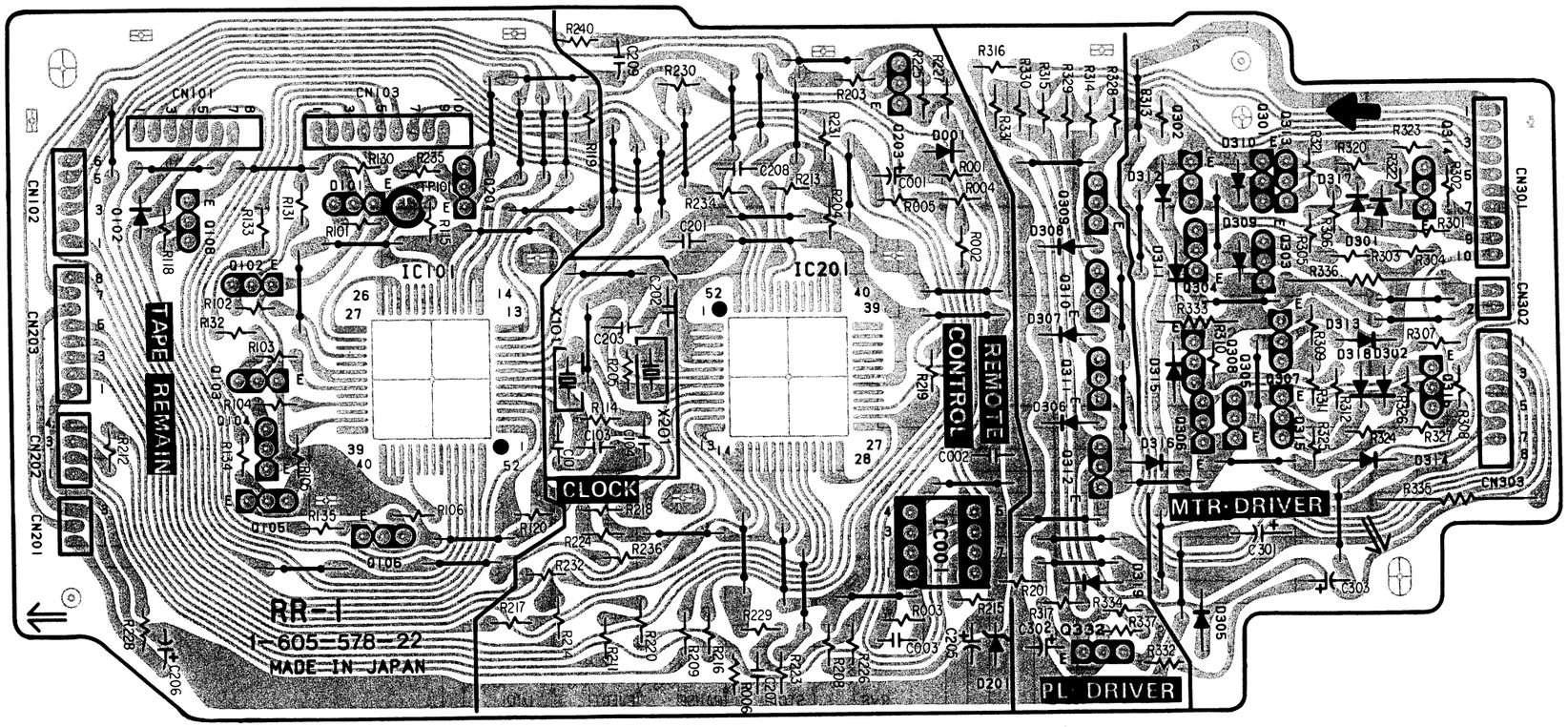

RR-1A BOARD

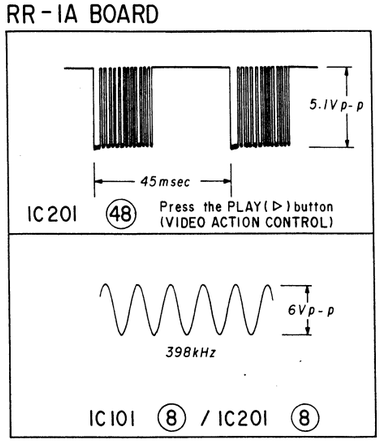

RR-1A (REMOTE CONTROL (RECEIVER) TAPE SOLENOID & MOTOR DRIVE REMAINING INDICATOR) BOARD SCHEMATIC DIAGRAM — *Ref. No.8000 series* —

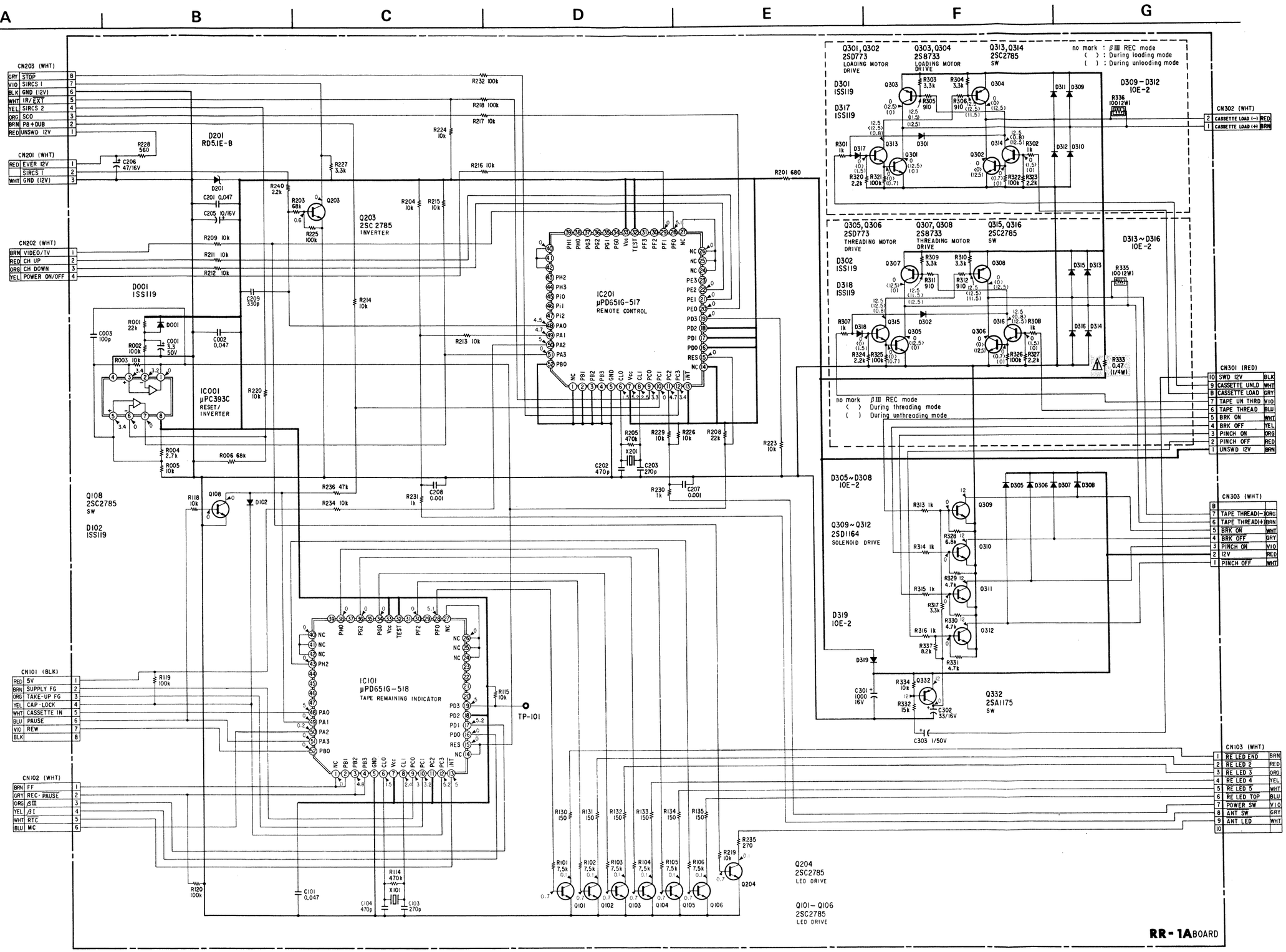

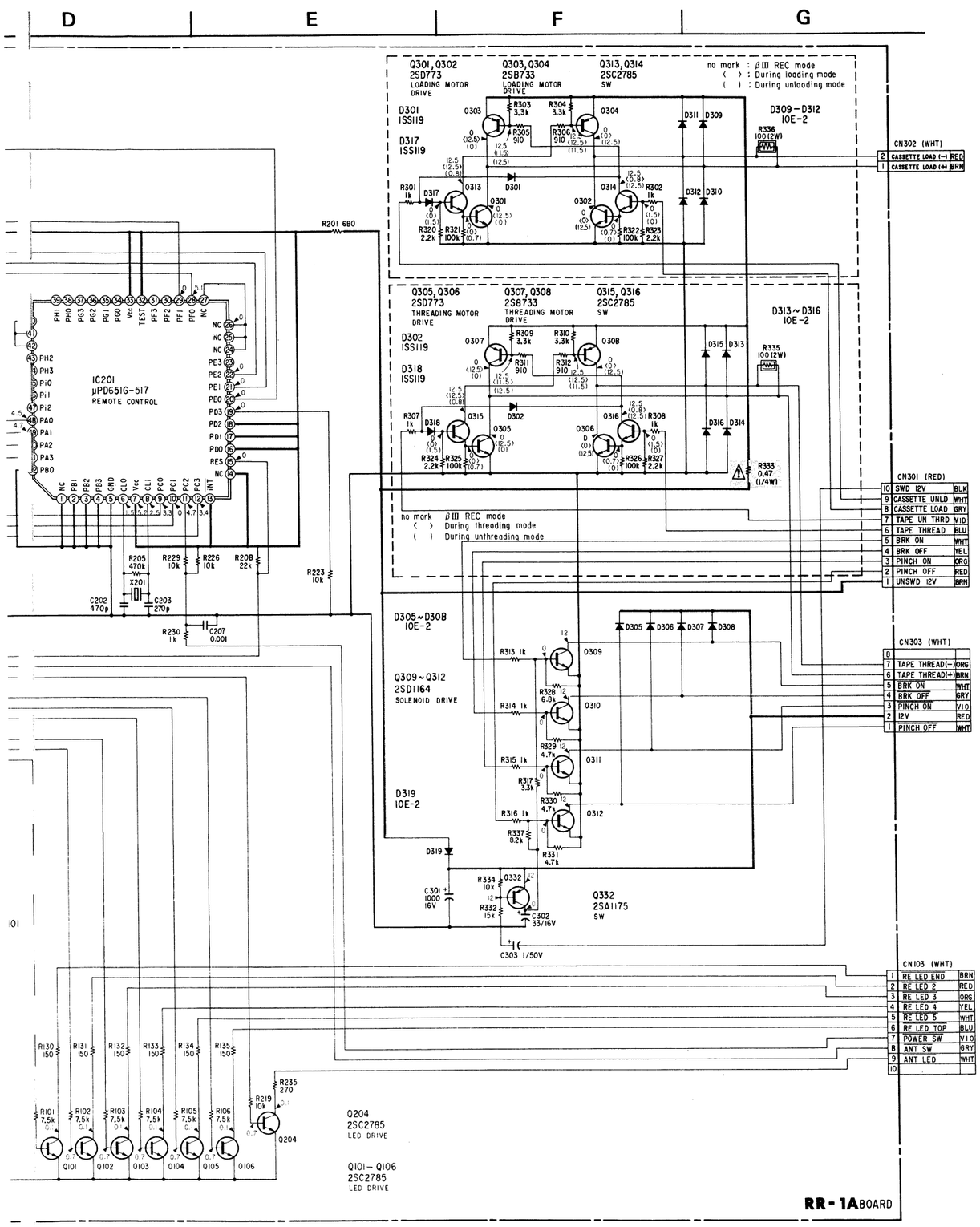

When indicating parts by reference number, please include the board name.

RL-7 (RELAY) AND LM-S (NOISE FILTER)
PRINTED WIRING BOARD — *Ref. No.LM-8 BOARD: 9000 series RL-7 BOARD: 9100 series* —

RL-7 BOARD

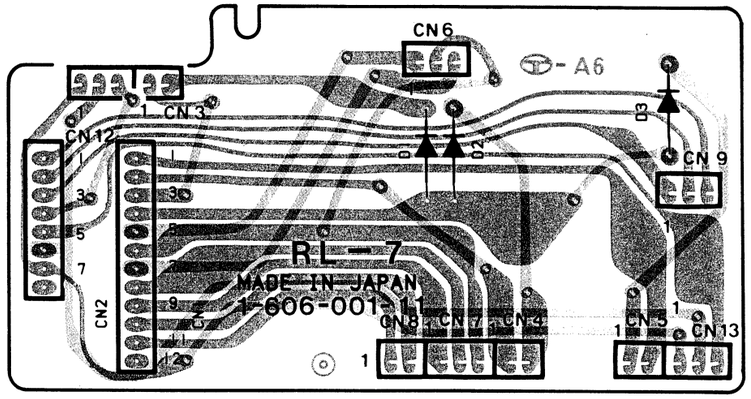

LM-8 BOARD

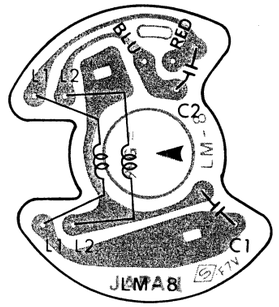

SCHEMATIC DIAGRAM

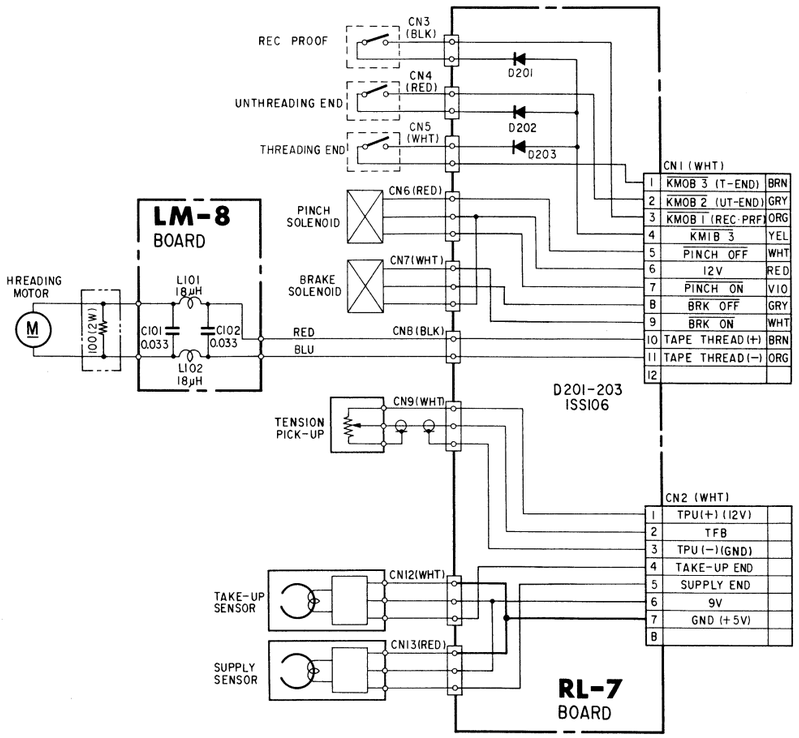

When indicating parts by reference number, please include the board name.

LM-9 (NOISE FILTER RELAY), RL-4 (RELAY), CI-2, CI-3 (SWITCH)
PRINTED WIRING BOARD — *Ref. No.LM-9 BOARD: 9500 series* —

CI-2 BOARD

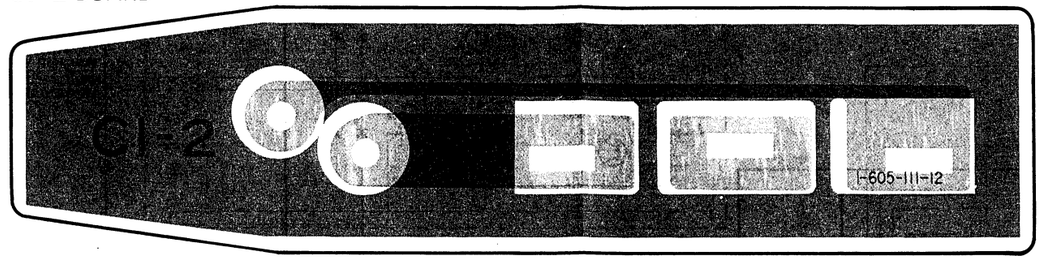

CI-3 BOARD

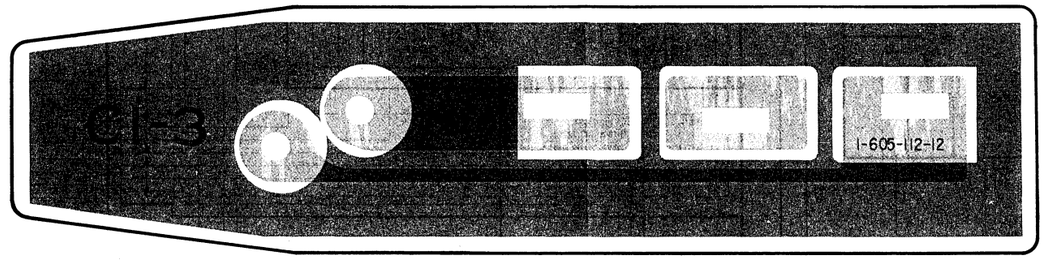

LM-9 BOARD

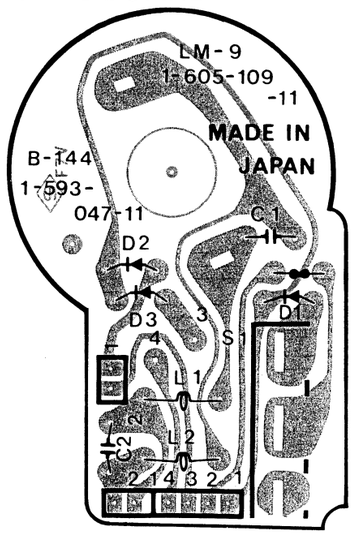

RL-4 BOARD

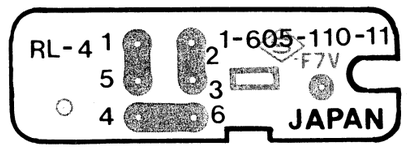

CI-2 BOARD

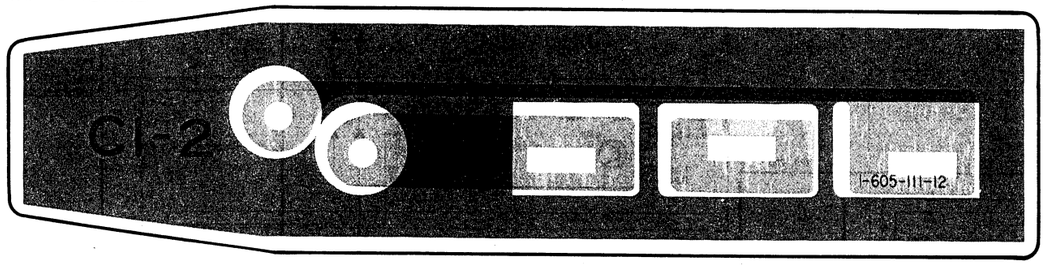

CI-3 BOARD

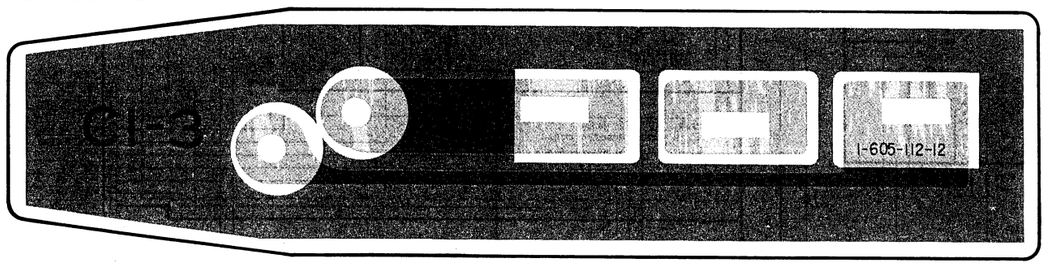

LM-9 BOARD

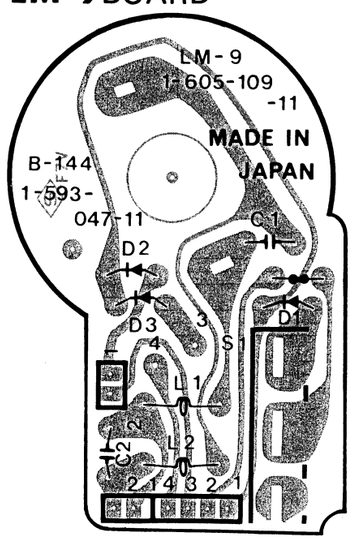

RL-4 BOARD

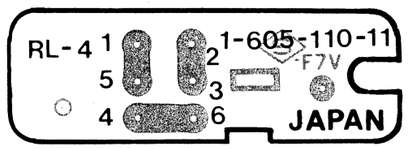

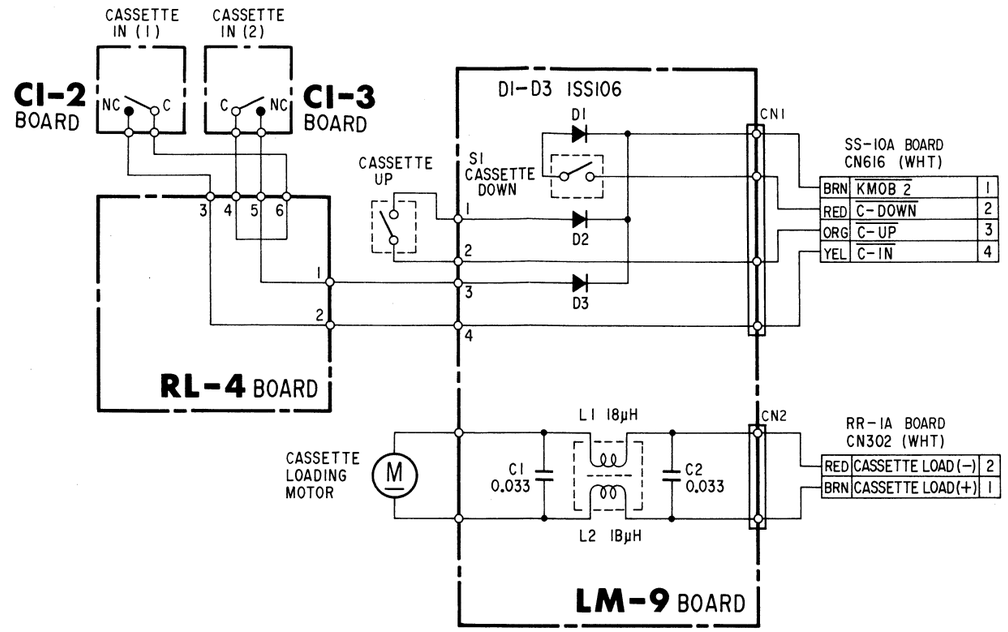

When indicating parts by reference number, please include the board name.

N (INFRARED RECEIVER) PRINTED WIRING BOARD — *Ref. No.9600 series* —

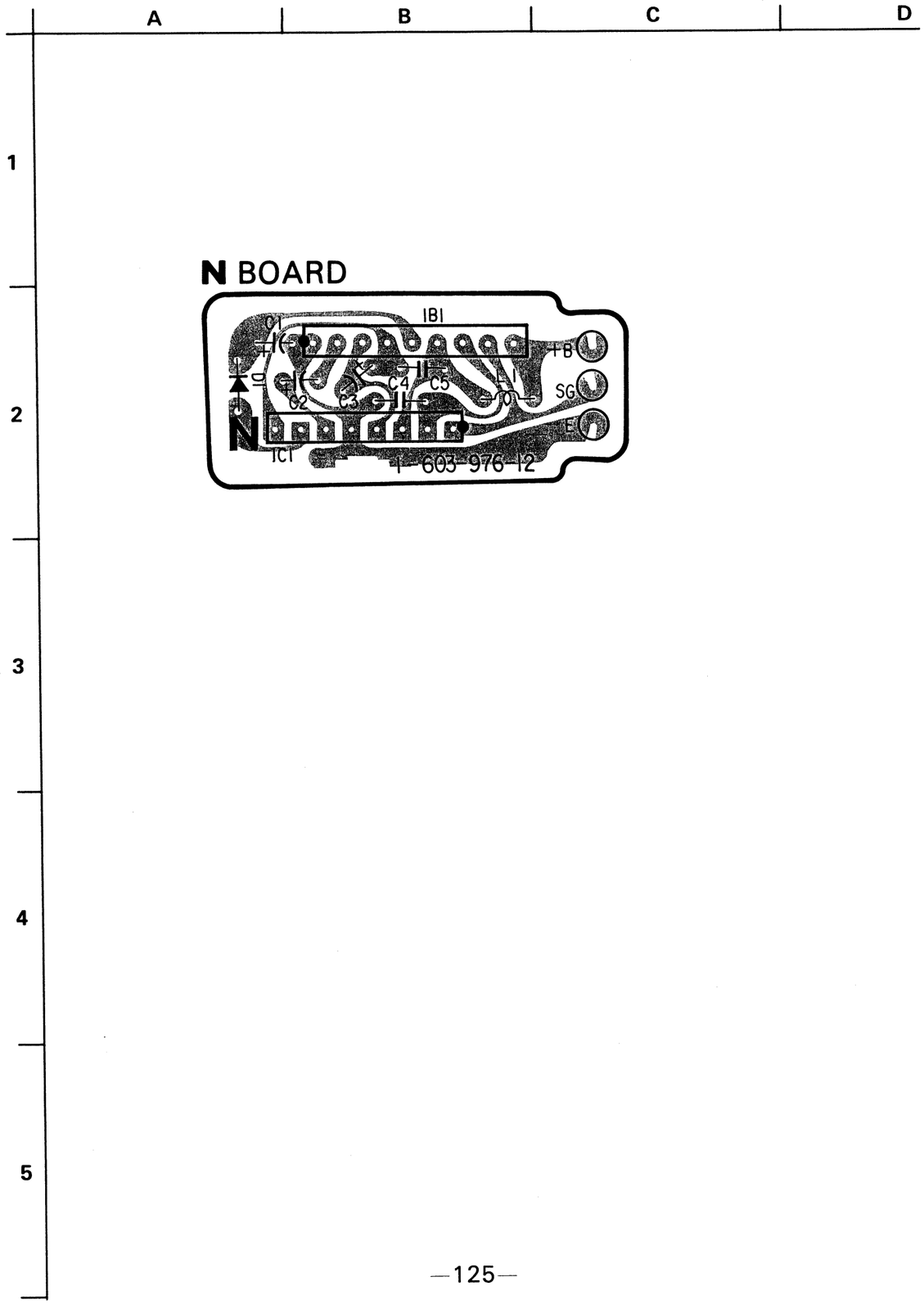

N (INFRARED RECEIVER) BOARD SCHEMATIC DIAGRAM — *Ref. No.9600 series* —

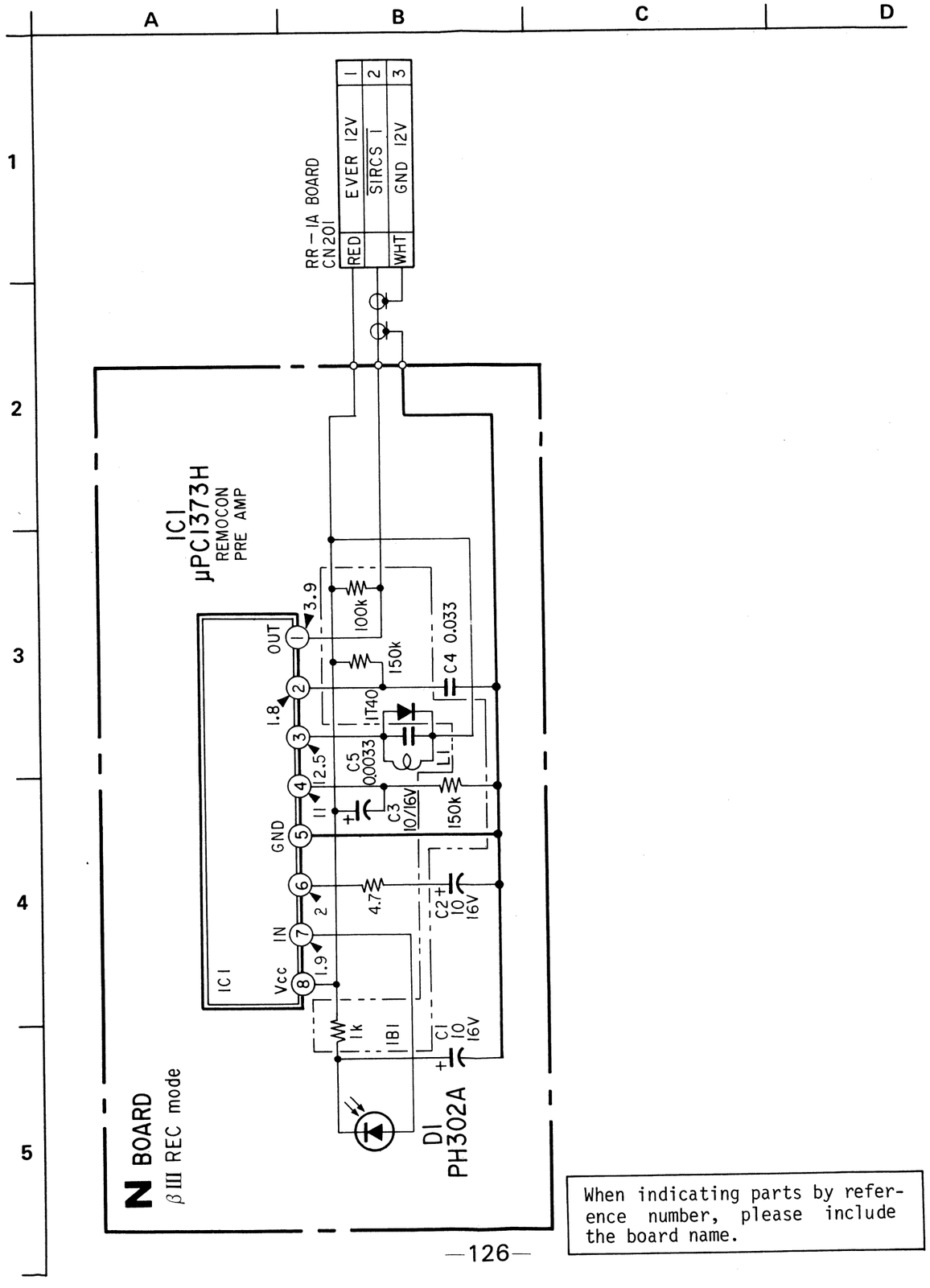

When indicating parts by reference number, please include the board name.

TU-21 (TUNER), TU-22 (RELAY) PRINTED WIRING BOARD – *Ref. No.10000 series* –

TU-21 BOARD

	A	B	C	D	E	F	G	
Q, IC			IC101	053, IC502, 106, 101, 103	IC501, 204, IC201, 201,202, IC202, 105, 104, 203, 205, 207,208, 502, 501, 206, 209, IC203	IC204, 213, 422, 401,402, 403, 421, 405,406	151, 214, 215, 216	Q, IC
D				425, 426, 212, 508, 509, 505,502, 510, 512, 206, 511, 513	506,507, 504,503, 202, 201, 207, 103, 514, 501, 203, 204,205, 101,102	215,214	421, 422, 423,424, 213, 211, 210	D
ADJ					RV101, RV102			ADJ

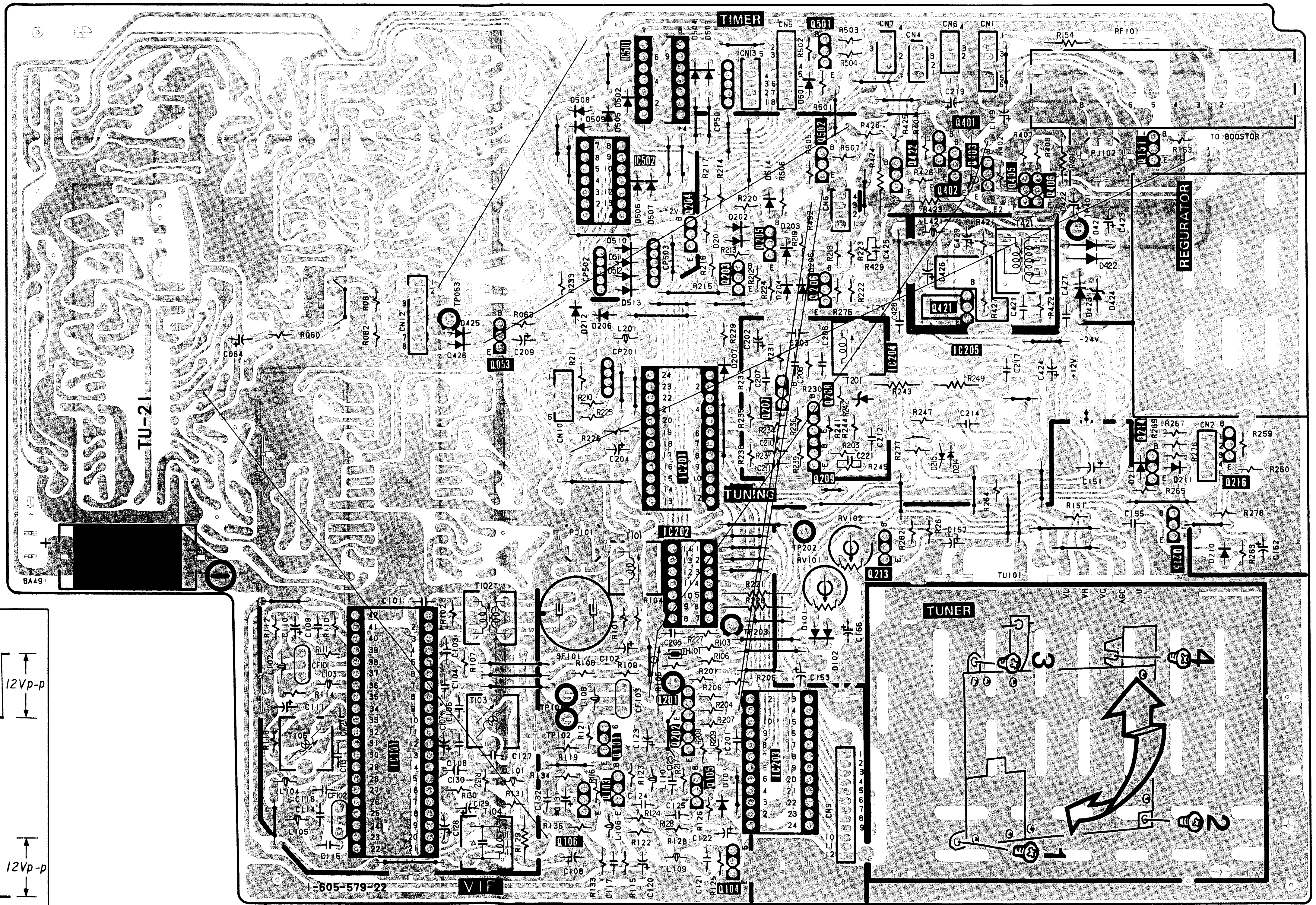

TU-21 BOARD

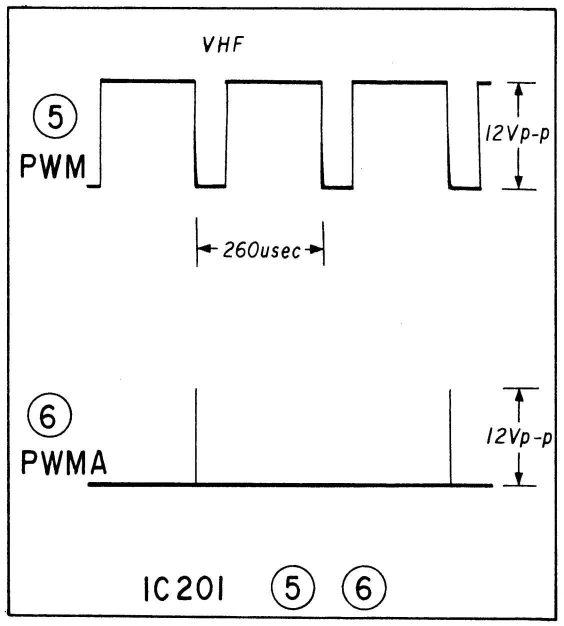

TU-21 (TUNER), TU-22 (RELAY) BOARD SCHEMATIC DIAGRAM — *Ref. No.10000 series* —

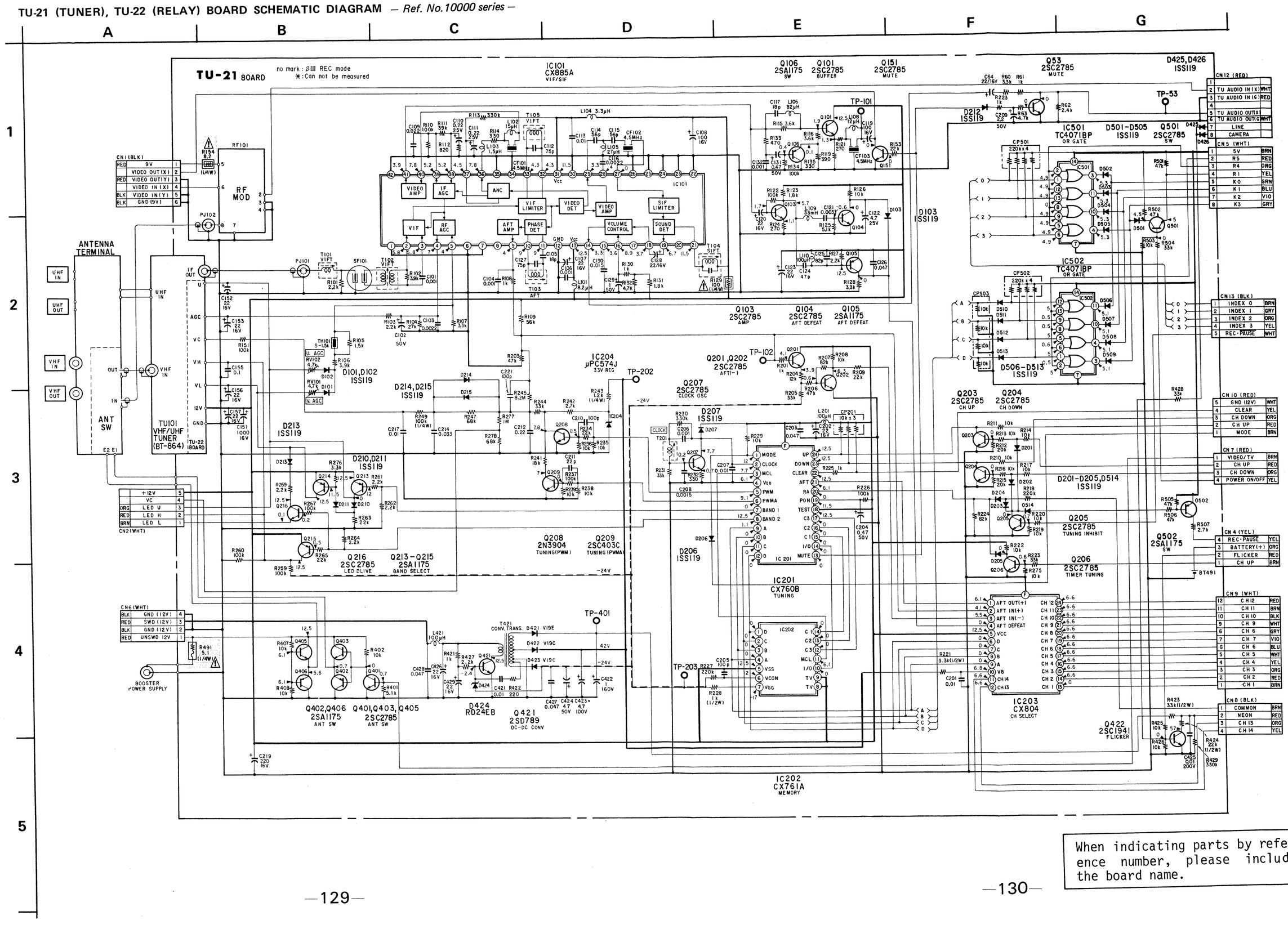

When indicating parts by reference number, please include the board name.

CH-21 (TUNING SWITCH)
PRINTED WIRING BOARD — *Ref. No.11000 series* —

CH-21 BOARD

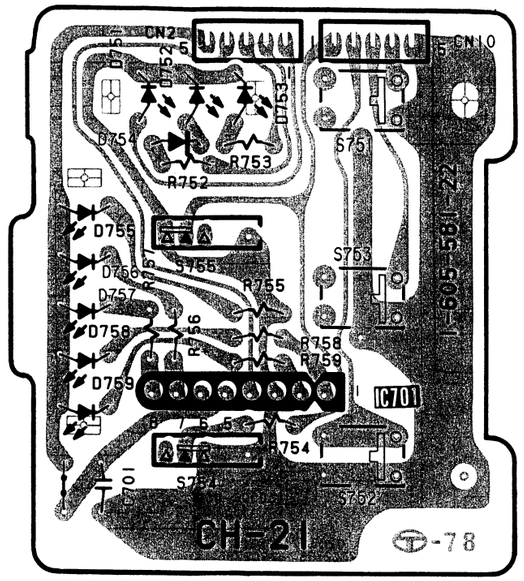

SCHEMATIC DIAGRAM

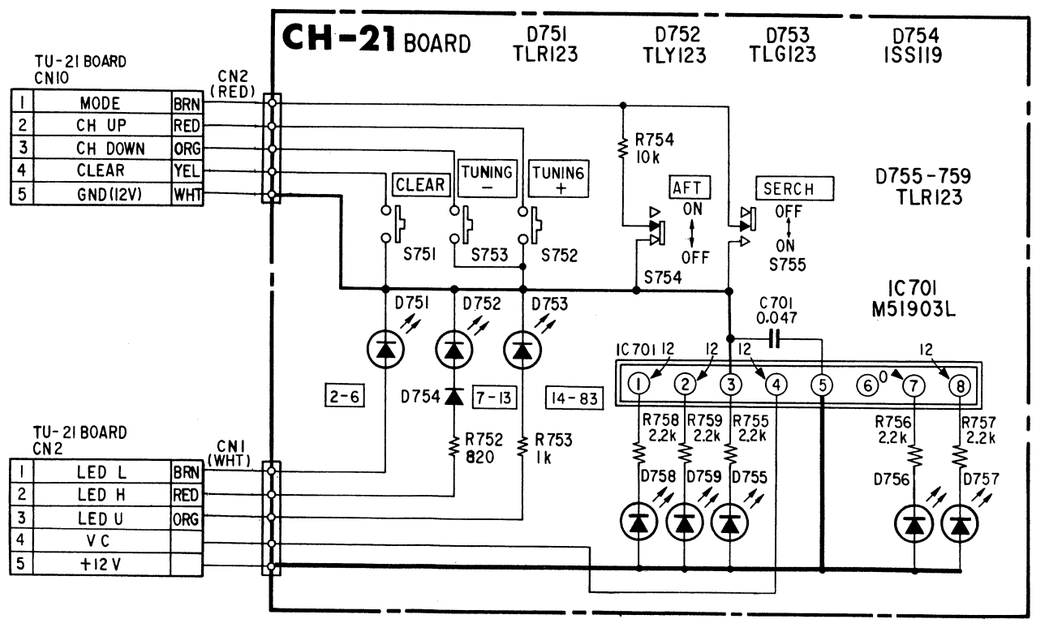

When indicating parts by reference number, please include the board name.

CH-22 (CHANNEL SELECTOR)
PRINTED WIRING BOARD — *Ref. No.12000 series* —

CH-22 BOARD

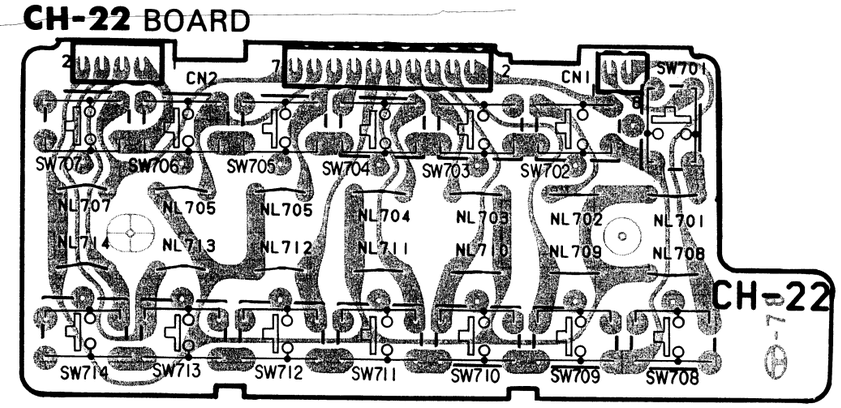

SCHEMATIC DIAGRAM

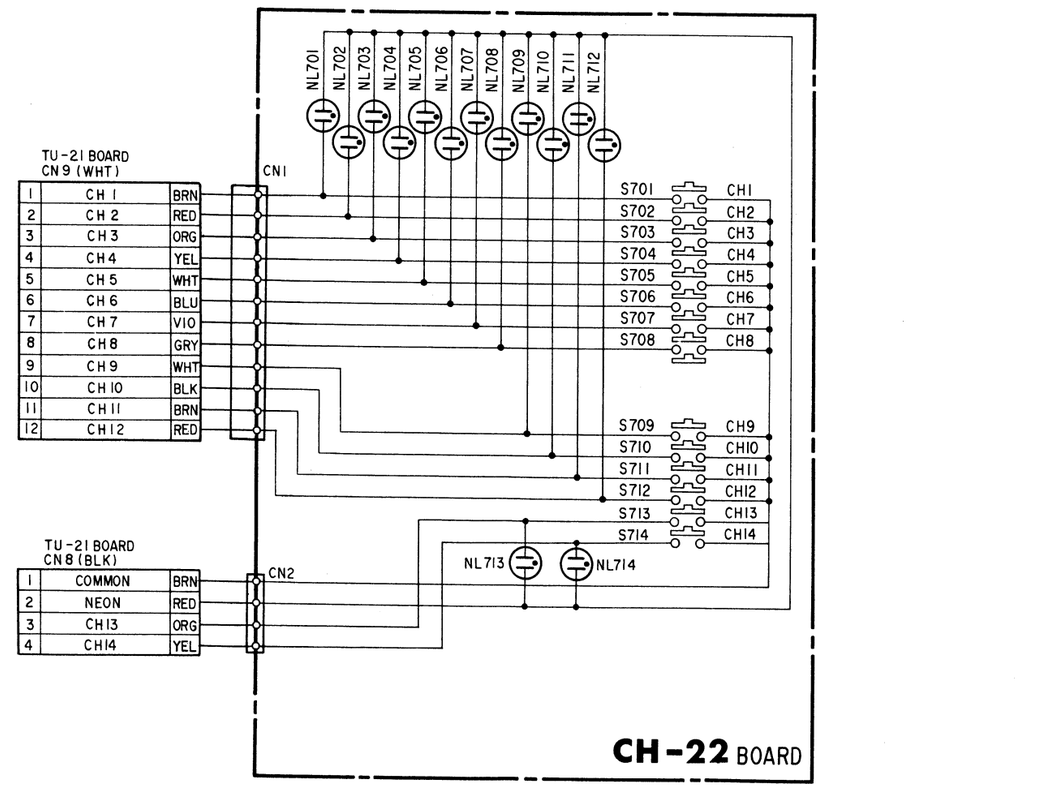

When indicating parts by reference number, please include the board name.

TM-34 (PROGRAM TIMER/TAPE COUNTER) PRINTED WIRING BOARD – *Ref. No.13000 series* –

TM-34

A B C D E F G

1 2 3 4 5

TM-34 BOARD

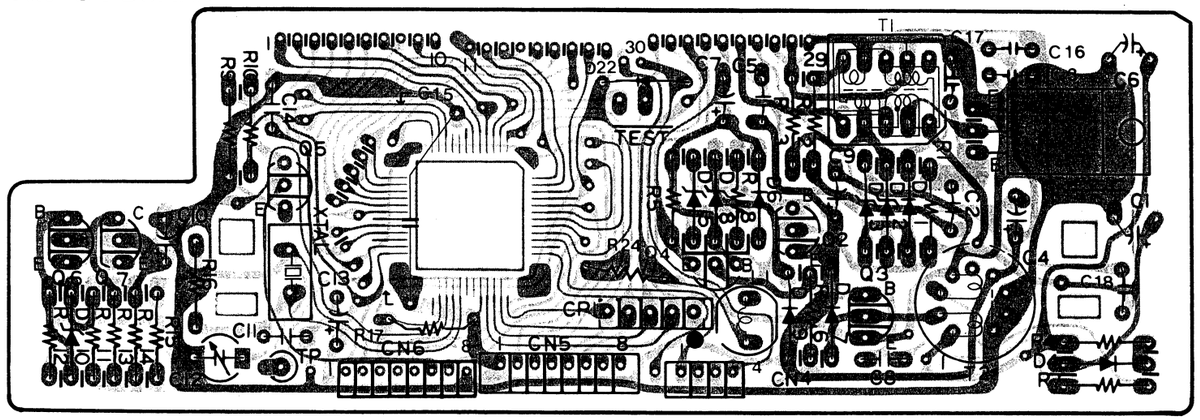

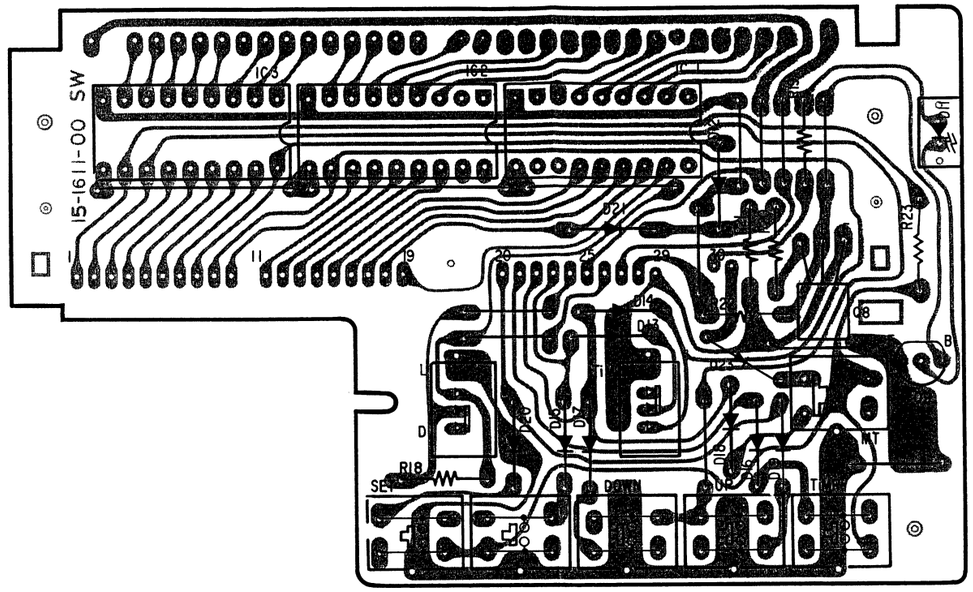

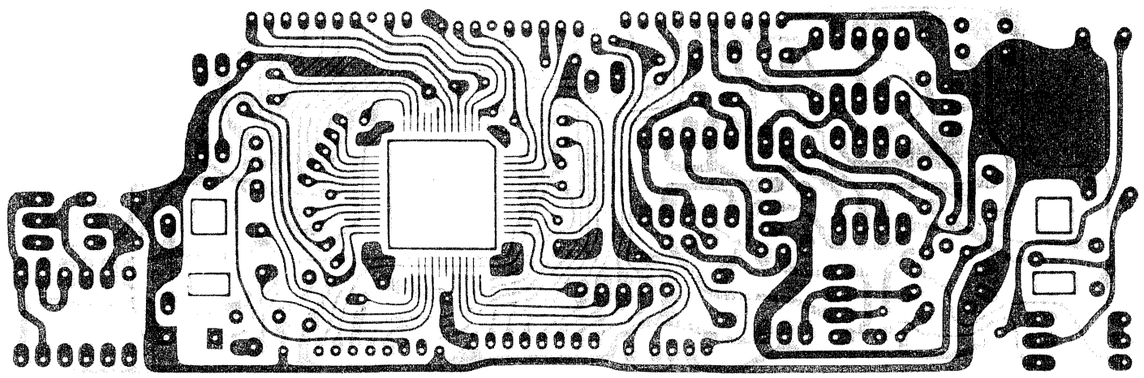

TIMER BLOCK

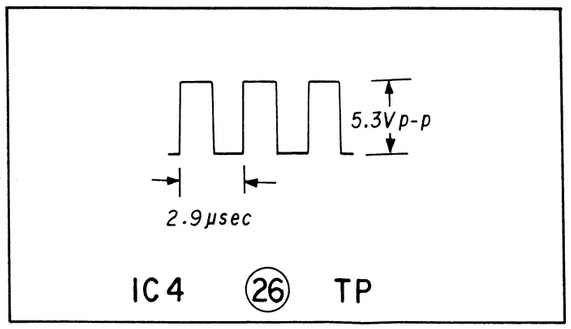

TM-34 (PROGRAM TIMER/TAPE COUNTER) BOARD SCHEMATIC BOARD — *Ref. No.13000 series* —

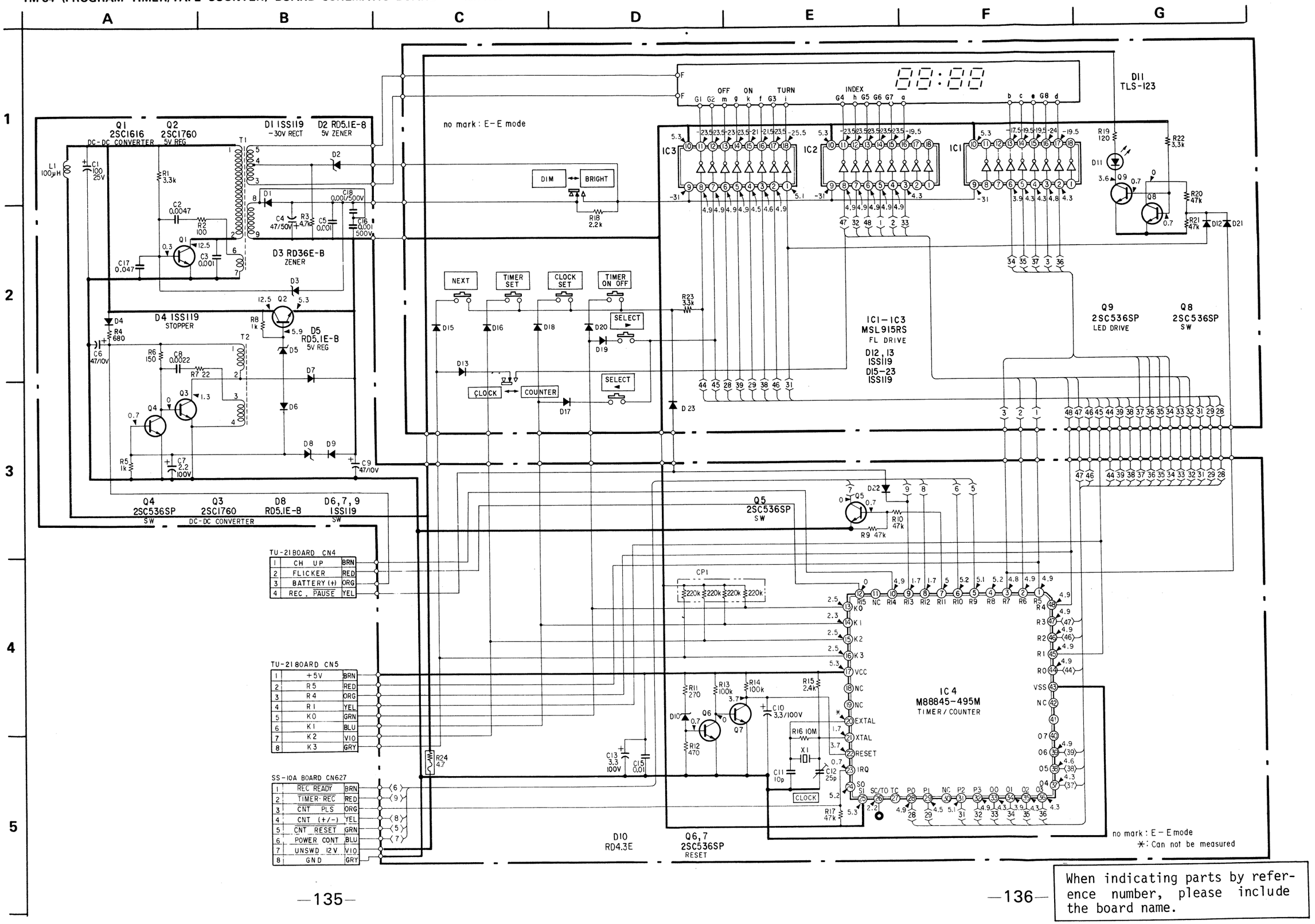

When indicating parts by reference number, please include the board name.

SR-11A (POWER SUPPLY) PRINTED WIRING BOARD — *Ref. No.14000 series* —

	A	B	C	D	E	F	G
1							
2							
3							
4							
5							

IC	IC3	IC2	IC1
Q	3 4 5	2	1
D	8 13 10 6 11	12 9	7 5 4 3 1 2
ADJ	RV3 RV1	RV2	

SR-11A BOARD

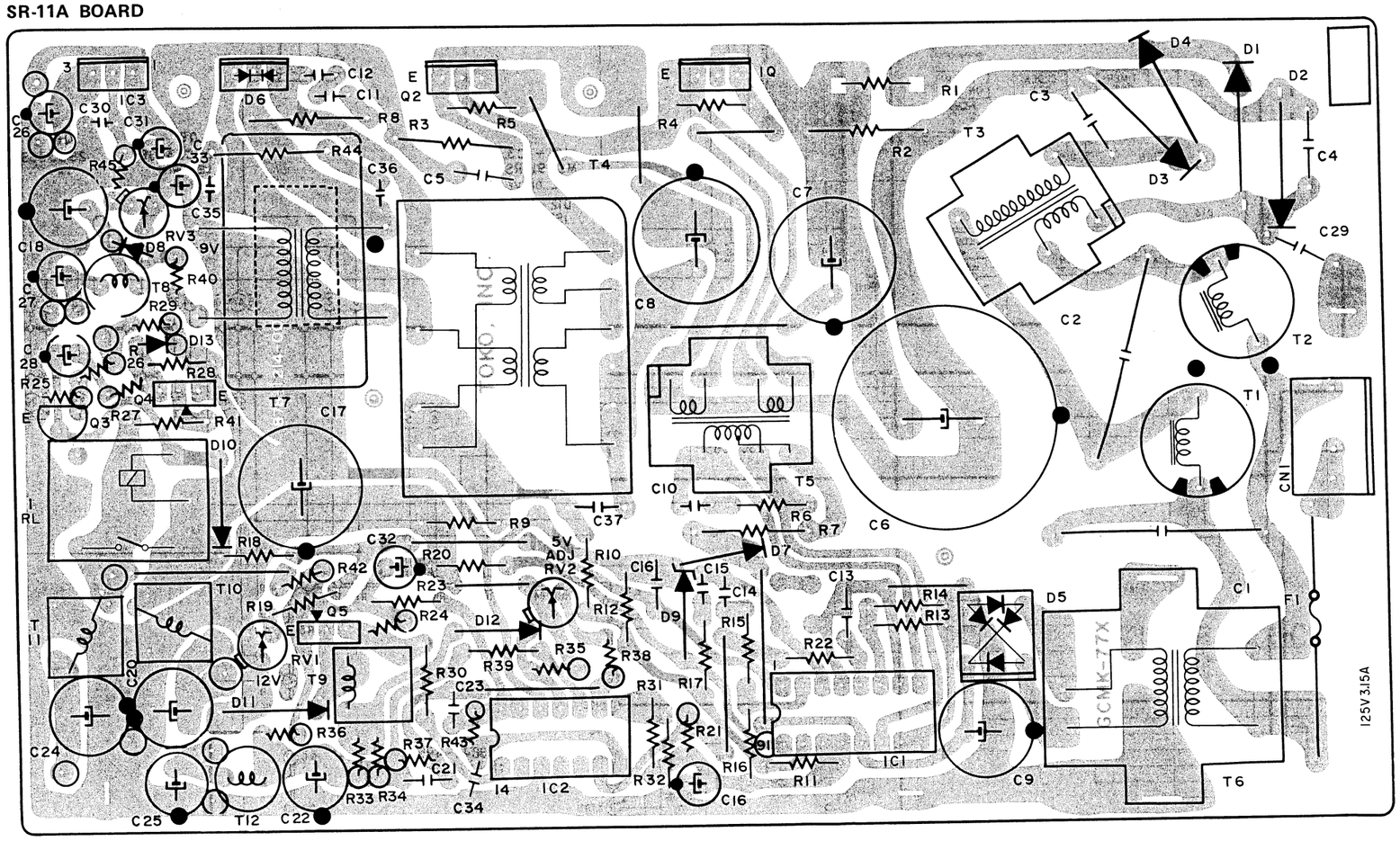

SR-11A BOARD

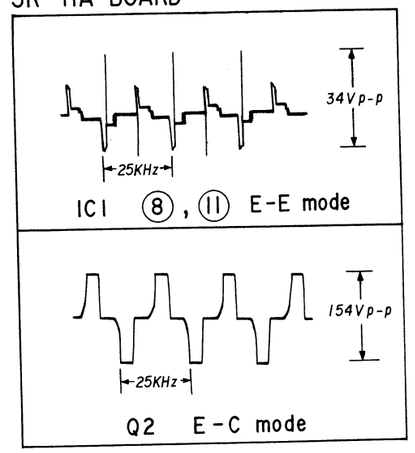

SR-11A (POWER SUPPLY) BOARD SCHEMATIC DIAGRAM — *Ref. No.14000 series* —

SR-11A
POWER SUPPLY

no mark : E-E mode
( ) : Voltages are measured from emitter of Q2.

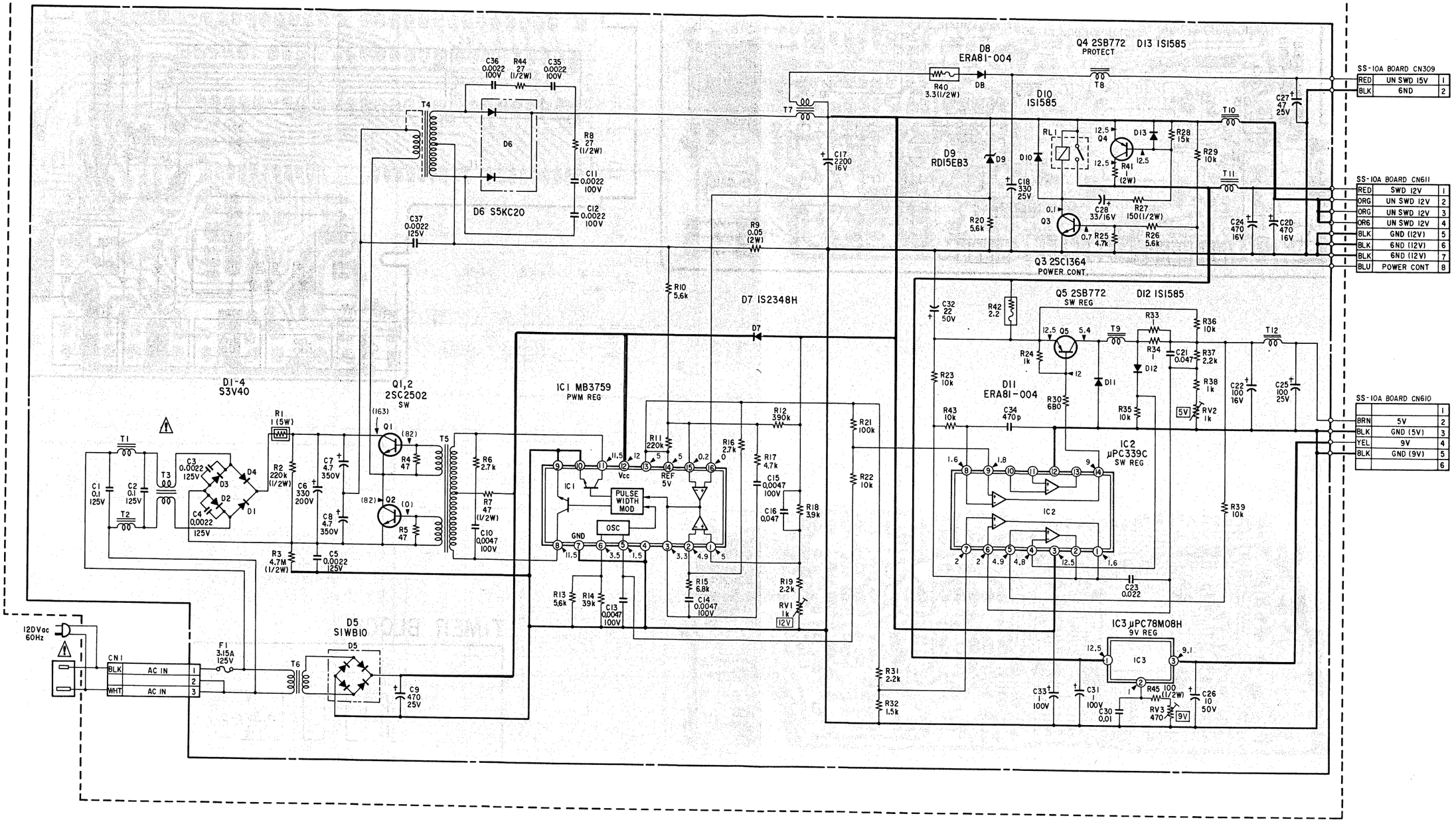

When indicating parts by reference number, please include the board name.

SECTION 5
EXPLODED VIEWS

NOTE:
- Items with no part number and no description are not stocked because they are seldom required for routine service.
- The construction parts of an assembled part are indicated with a collation number in the remark column.
- As to the part numbered with E-, refer to the electrical parts list.
- Items marked " ♦ " are not stocked since they are seldom required for routine service. Some delay should be anticipated when ordering these items.

When indicating parts by reference number, please include the board name.

The components identified by shading and mark ⚠ are critical for safety. Replace only with part number specified.

Les composants identifiés par une trame et une marque ⚠ sont critiques pour la sécurité. Ne les remplacer que par une pièce portant le numéro spécifié.

(1) CABINET ASSEMBLY

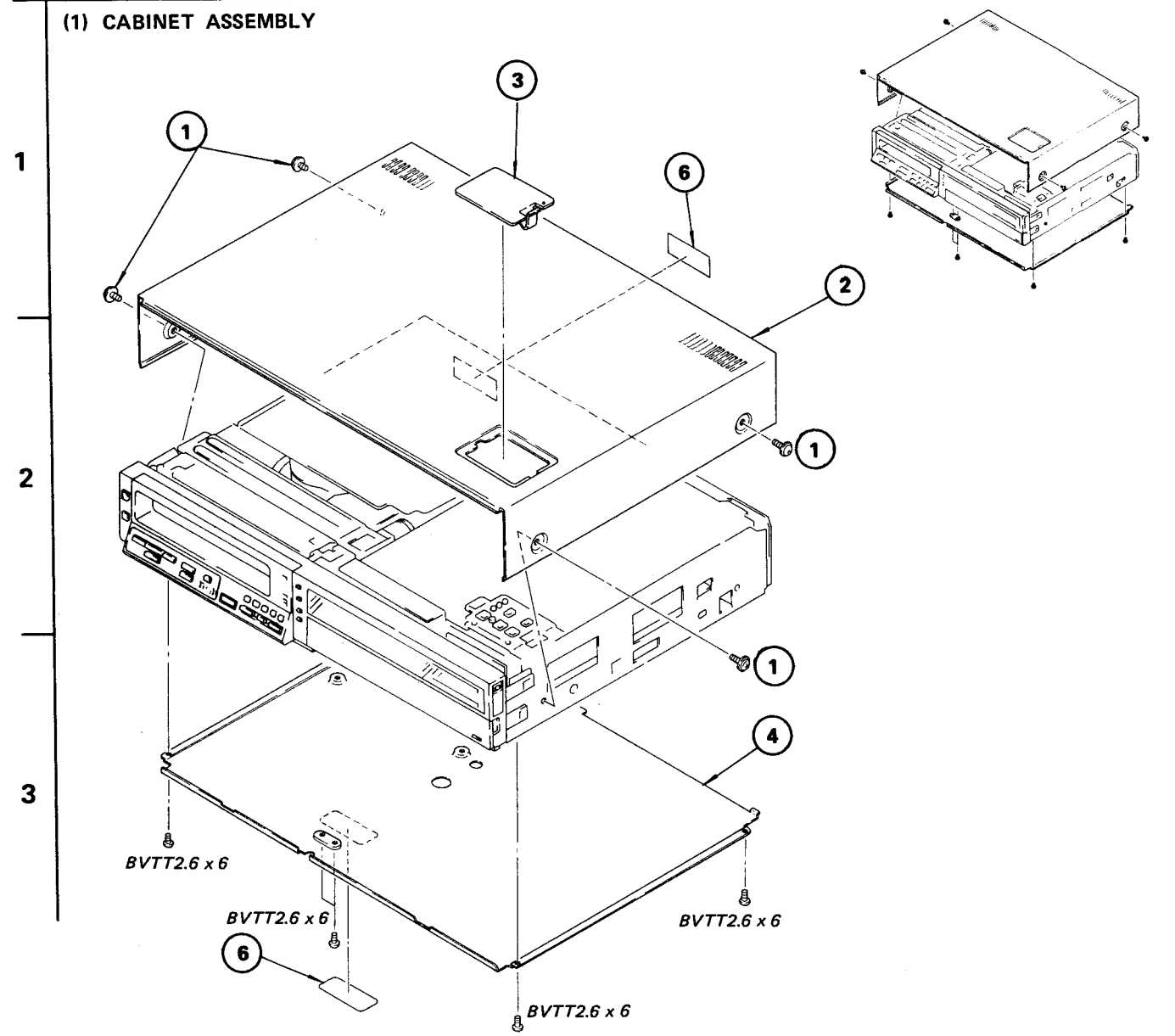

No.	Part No	Description	Remark
1	3-703-354-11	SCREW (OS), CASE, CLAW	
2	X-3670-047-0	CASE ASSY	
3	4-342-123-00	DOOR, PRESET	
4	X-3670-039-0	PLATE ASSY, BOTTOM	5
5	3-703-043-21	LABEL, MAIN COUTION	
6	♦ :3-671-881-00	LABEL, MODEL NUMBER	

(2) FRONT ASSEMBLY

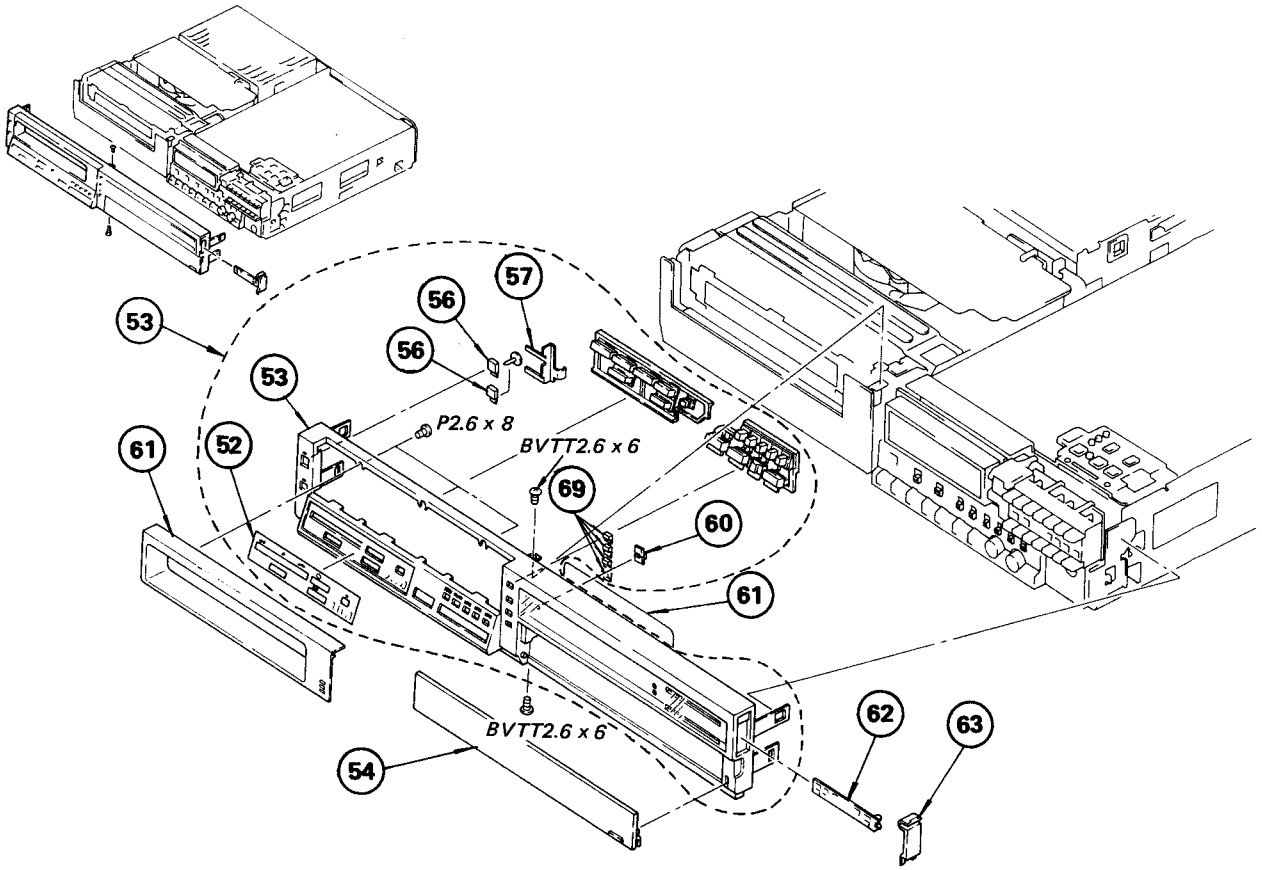

No.	Part No	Description	Remark
51	X-3670-038-0	GUIDE ASSY, ENTRANCE, CASSETTE	
52	3-670-176-00	PLATE, ORNAMENTAL, BUTTON, FU	
53	X-3670-054-0	PANEL ASSY, FRONT 52, 55–57. 59. 60	
54	X-3670-050-0	DOOR ASSY, FRONT	
55	3-670-082-11	BUTTON, PE	
56	3-670-082-00	BUTTON, PE	
57	3-670-080-00	SPRING, LEAF (PE)	

No.	Part No	Description	Remark
59	3-670-074-00	BUTTON, COUNTER	
60	♦:3-670-075-00	LED COVER, TIMER RECORD	
61	3-671-861-00	COVER, TIMER	
62	3-670-122-00	HOLDER, INDICATOR	
63	3-670-087-00	FRONT (RIGHT)	

(3) POWER ASSEMBLY

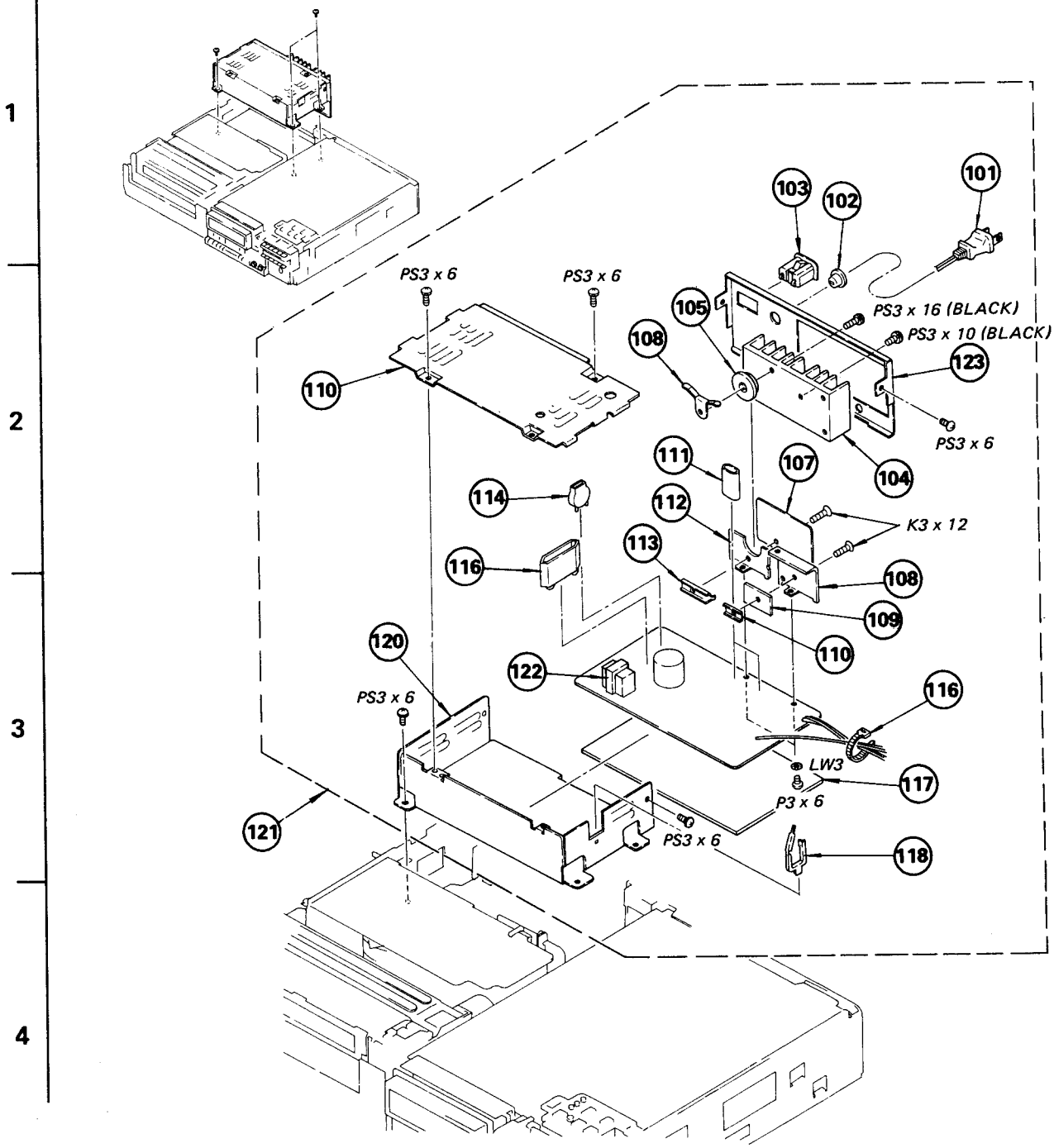

No.	Part No	Description	Remark
101	⚠ 1-551-964-00	CORD, POWER	
102	⚠ 2-231-019-00	GROMMET, STRAIN RELIEF	
♦103	⚠ 1-561-347-00	SOCKET, AC	
104	♦ 9-982-200-00	HEAT SINK, FIN	
105	2-291-522-00	WASHER INSULATING	
106	♦ 9-982-213-00	BRACKET, UP	
107	9-982-204-00	SHEET, INSULATING	
108	♦ 9-982-202-00	HEAT SINK, SP	
109	9-982-203-00	SHEET, INSULATING	
110	♦ 9-982-021-00	RETAINER, SP	
111	2-291-517-00	SHEET INSULATING, UP TO, 3	
112	♦ 2-291-515-00	HEAT SINK, UP	
113	♦ 2-291-519-00	RETAINER, UP	
114	♦ 2-291-547-00	COVER, CAPACITOR	

No.	Part No	Description	Remark
115	♦ 4-316-137-00	COVER, CAPACITOR	
116	♦ 3-701-748-00	CLAMP, HARNESS	
117	♦ 9-982-208-00	PLATE, INSULATING	
118	♦ 4-316-015-00	CLAMP, HARNESS	
119	♦ 9-982-197-00	CASE, UPPER	
120	♦ 9-982-198-00	CASE, LOWER	
121	⚠ 1-413-081-11	POWER BLOCK (SR-11A)	101,102,103,104,105 106,107,108,109,110 111,112,113,114,115 116,117,118,119,120 122,123
122	⚠ 1-447-197-00	TRANSFORMER, POWER	
123	♦ 9-982-265-00	PANEL, CASE	

(4) MAIN BOARD ASSEMBLY

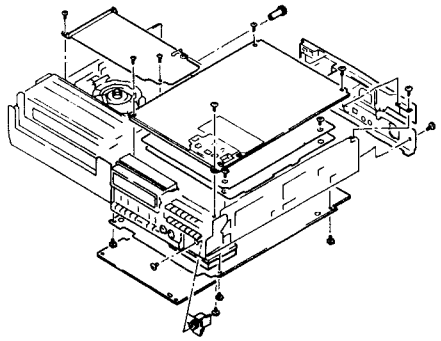

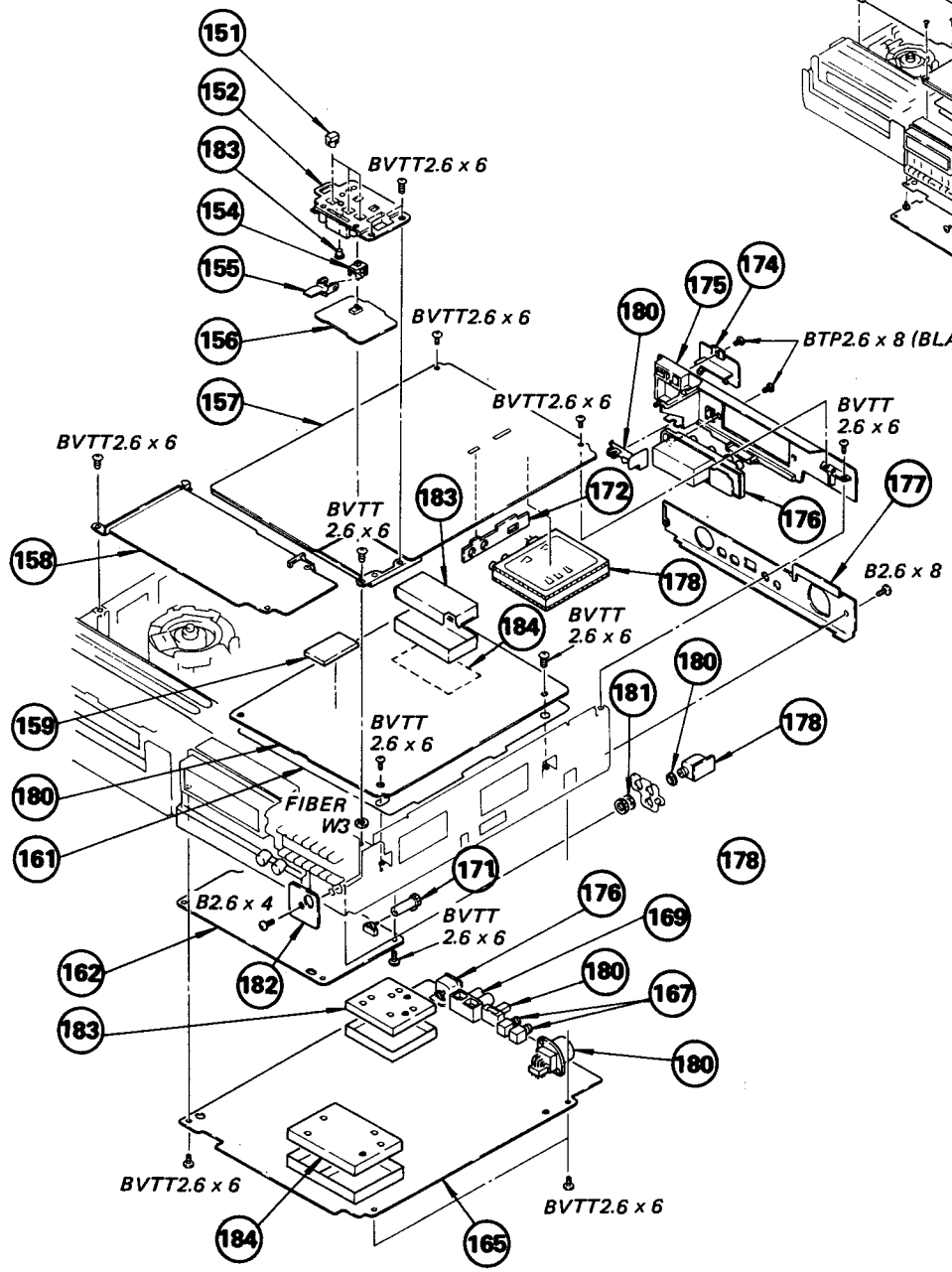

No.	Part No	Description	Remark
151	2-291-041-00	BUTTON (A), PRESET	
152	X-3670-025-0	PRESET ASSY	151,153
153	3-669-528-00	CAP, BUTTON	
154	3-670-148-00	KEY (P), SLIDE	
155	3-670-138-00	LEVER, RELEASE	
156 ♦	:1-605-581-00	CH-21 BOARD	
157 ♦	:A-6721-086-A	TU-21 BOARD, COMPLETE	
158 ♦	:A-6717-236-A	RR-1A BOARD, COMPLETE	
159 ♦	:1-606-231-00	MB-3 BOARD	
160 ♦	:A-6715-131-A	SS-10A BOARD, COMPLETE	
161 ♦	:3-670-123-00	INNER, INSULATOR	
162 ♦	:A-6711-323-A	VL-3 BOARD, COMPLETE	
163 ♦	:3-671-855-00	LID, CASE, SHIELD, VA-A	
164 ♦	:3-671-852-00	LID, CASE, SHIELD, VA-V	
165 ♦	:A-6711-314-A	VA-3Z BOARD, COMPLETE	
166	1-561-690-00	CONNECTOR, CAMERA 14P	
167	1-507-251-XX	JACK	
168	1-552-821-00	SWITCH, SLIDE	

No.	Part No	Description	Remark
169	1-507-742-00	JACK, PIN 2P	
170	1-561-703-00	CONNECTOR, DIN 8P	
171	3-670-149-00	KNOB, V SYNCHRONOUS	
172 ♦	:1-605-575-00	TU-22 BOARD	
173	1-463-377-00	TUNER (8T-864)	
174	2-291-019-00	LID, BOOSTER	
175	3-670-160-11	PANEL (UPPER), REAR	
176	1-536-672-41	TERMINAL BOARD (WITH ANT SW)	
177	3-671-808-03	PANEL (LOWER), REAR	
178 ♦	:1-606-272-00	MI-2 BOARD	
179	1-507-285-00	JACK	
180	3-670-164-00	SPACER, JACK	
181	3-701-444-11	WASHER, 6	
182 ♦	:3-670-171-00	PLATE (SMALL), ORNAMENTAL	
183 ♦	:X-3670-043-0	LID ASSY, SS-10 SHIELD CASE	
184 ♦	:X-3670-042-0	LID ASSY, REAR, SHIELD CASE	
185 ♦	:3-671-857-00	PLATE, GROUND	

(5) FRONT BOARD ASSEMBLY

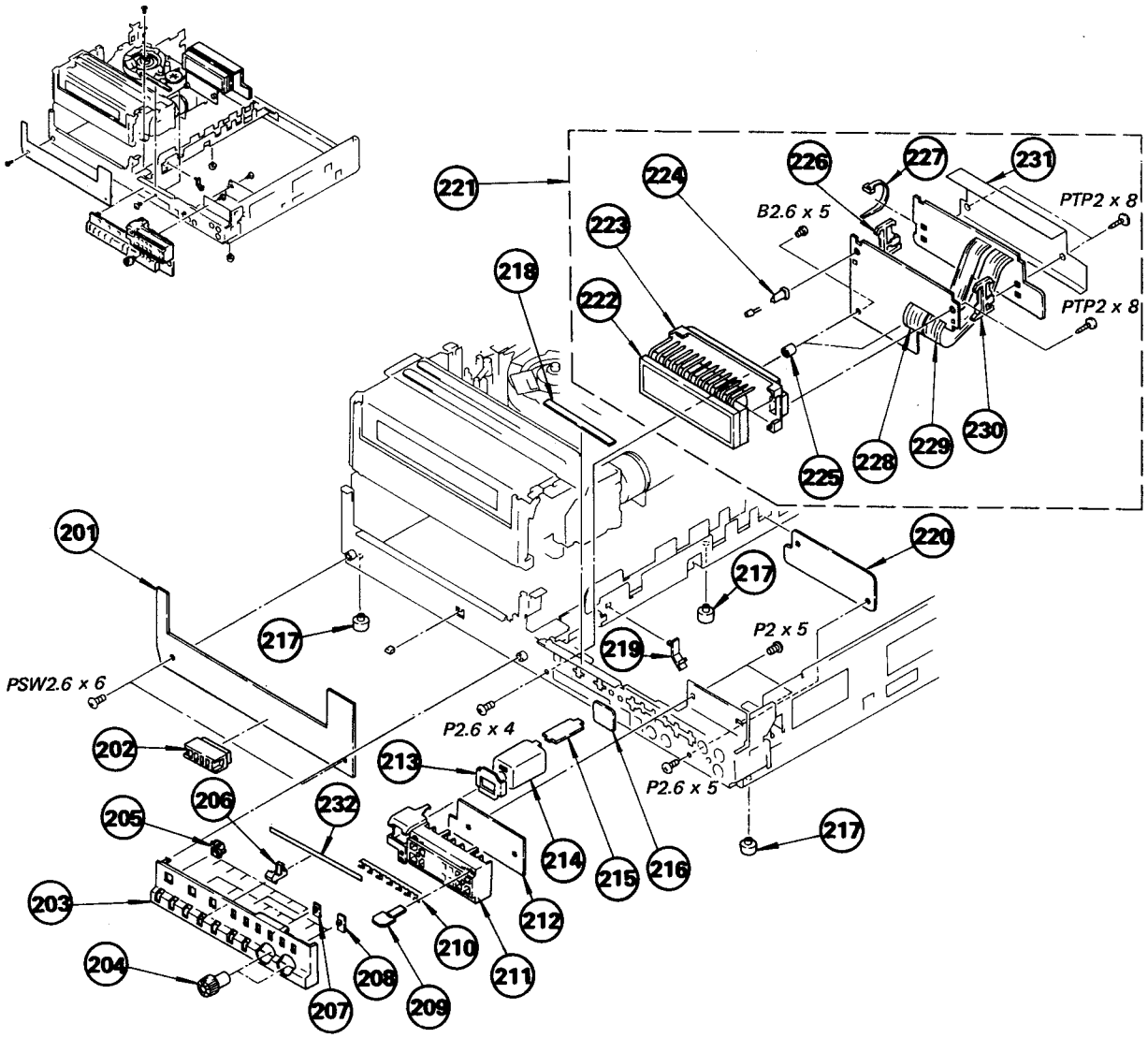

No.	Part No	Description	Remark
201	♦:A-6717-225-A	FU-3 BOARD, COMPLETE	
202	♦:3-670-094-00	HOLDER, LED, 6 GANG	
203	X-3670-051-0	PANEL ASSY, SUB, FRONT	
204	3-670-093-00	KNOB, TRACK CONTROL	
205	3-670-091-00	KEY (B), TACT	
206	3-670-090-00	KEY (A), TACT	
207	3-670-089-00	KEY (B), SLIDE	
208	3-670-088-00	KEY (A), SLIDE	
209	2-291-024-00	BUTTON, TUNER	
210	♦:2-291-025-00	SPRING, LEAF	
211	3-670-159-00	FRAME, TUNER	
212	♦:1-605-895-00	CH-22 BOARD	
213	♦:3-671-831-00	COVER, RAY CATCHER BLOCK	
214	♦:4-342-117-00	CASE, SHIELD (MAIN), R	
215	♦:1-603-976-00	N BOARD	
216	♦:4-342-118-00	LID, SHIELD CASE, R	
217	3-670-155-00	LEG	

No.	Part No	Description	Remark
218	♦:3-670-142-00	INSULATOR, TIMER	
219	♦:3-701-832-00	HINGE, CIRCUIT BOARD	
220	♦:1-605-410-00	SW-12 BOARD	
221	1-548-552-12	TIMER BLOCK	222,223,224,225,226 227,228,229,230,231
222	♦:9-982-255-00	FLUORESCENT DISPLAY	
223	♦:9-982-256-00	HOLDER, INDICATION TUBE	
224	♦:9-982-259-00	HOLDER, LED	
225	♦:9-982-257-00	SPACER, PC BOARD	
226	♦:9-982-245-00	HOLDER, PC BOARD	
227	3-701-748-00	CLAMP, HARNESS	
228	♦:9-982-061-00	CABLE, RIBBON 9P	
229	♦:9-982-260-00	CABLE, RIBBON 10P	
230	♦:9-982-254-00	HOLDER, PC BOARD	
231	♦:9-982-253-00	CASE ASS'Y SHIELD	
232	♦:3-671-865-00	CUSHION, BUTTON	

(6) CASSETTE LOADING ASSEMBLY 1

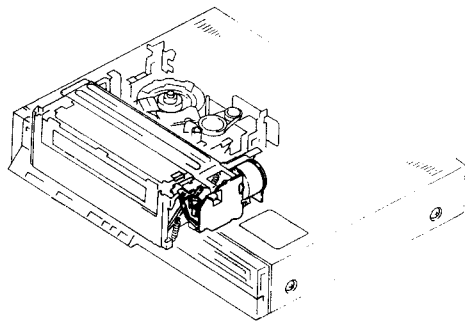

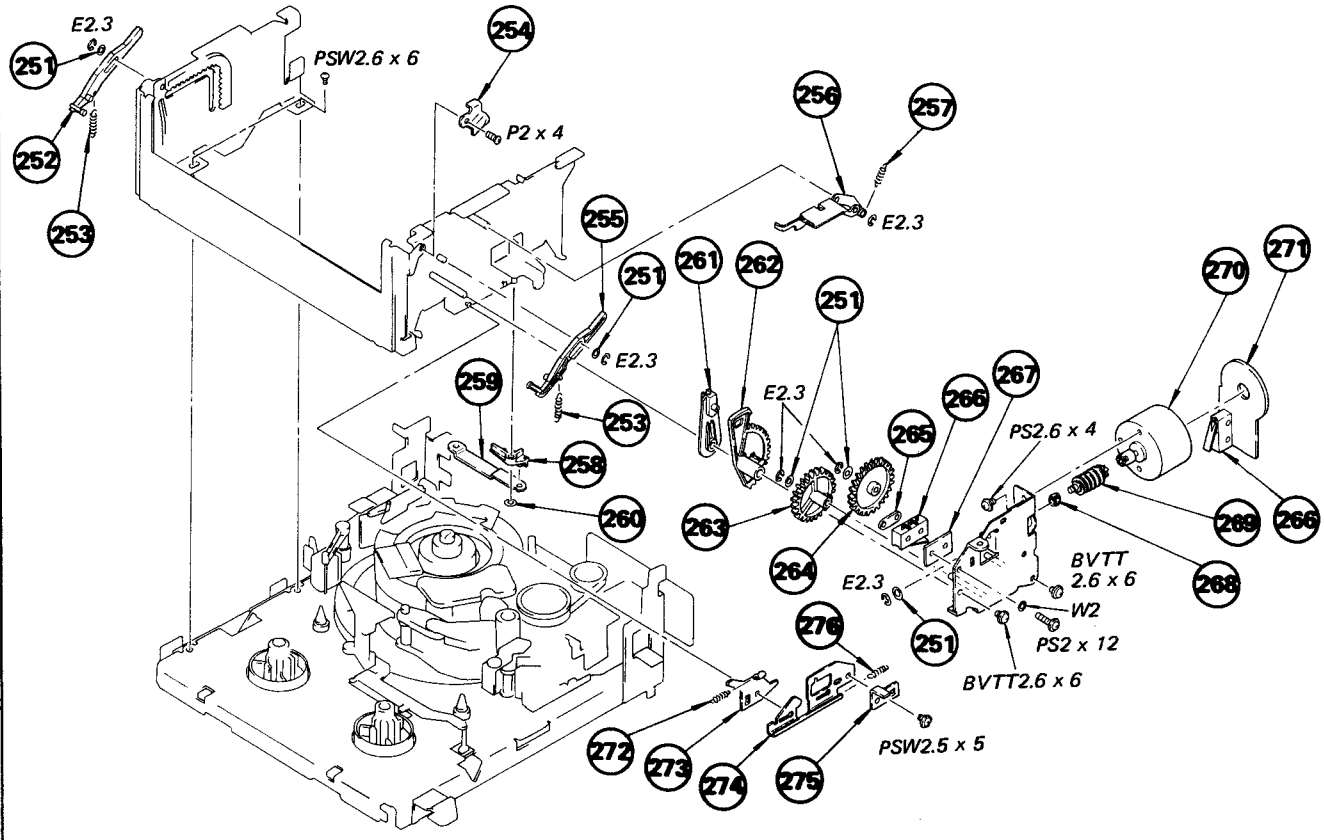

No.	Part No	Description	Remark
251	3-701-439-21	WASHER	
252	3-670-056-00	ARM (L), DOOR	
253	3-500-130-00	SPRING, TENSION	
254	♦:3-671-819-00	COVER, SECTOR GEAR	
255	3-670-057-00	ARM (R), DOOR	
256	♦:3-670-152-00	ARM, LOCK, UP	
257	3-536-767-XX	SPRING, TENSION	
258	3-670-001-00	LEVER, UNLOCK	
259	3-670-034-00	JOINT, UNLOCK	
260	3-669-465-00	WASHER (1.5), STOPPER	
261	3-670-136-00	ARM, HOLDER DRIVING	
262	3-670-151-00	GEAR, SECTOR	
263	3-670-016-00	GEAR (A)	

No.	Part No	Description	Remark
264	♦:3-670-015-00	WHEEL, WORM	
265	♦:3-646-476-00	NUT, PLATE	
266	1-552-664-00	SWITCH, MICRO	
267	3-534-263-00	INSULATOR	
268	♦:3-670-168-00	BEARING, WORM	
269	X-3670-001-0	WORM ASSY	
270	X-3670-002-0	MOTOR ASSY, FL	
271	♦:A-6728-246-A	LM-9 BOARD, COMPLETE	
272	3-530-248-XX	SPRING, TENSION	
273	♦:3-670-010-00	STOPPER, LOCK	
274	♦:3-670-009-00	PLATE, LOCK	
275	♦:3-670-011-00	PLATE, ADJUSTMENT, CD	
276	3-630-615-XX	SPRING, TENSION	

(7) CASSETTE LOADING ASSEMBLY 2

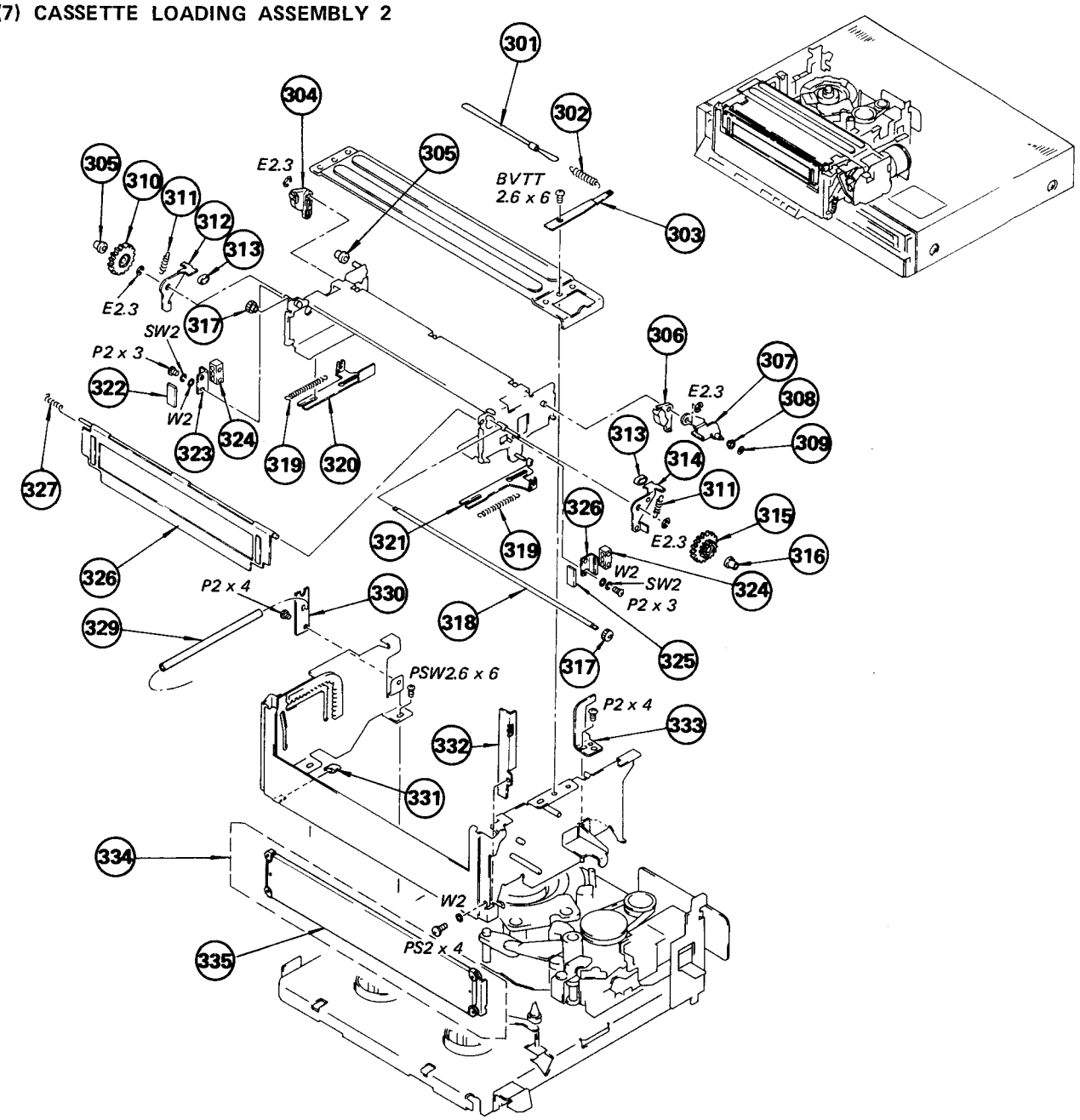

No.	Part No	Description	Remark
301	3-671-863-00	STRING, PULL, WIRE	
302	3-535-021-00	SPRING, TENSION	
303	3-671-864-00	PLATE, SPRING HOOK	
304	3-670-003-00	CAM (L), C-IN	
305	3-670-018-00	ROLLER, GUIDE	
306	3-670-004-00	CAM (R), C-IN	
307	♦:X-3670-005-0	ARM ASSY, OPEN LID	
308	3-670-054-00	ROLLER, OPEN LID	
309	3-669-465-00	WASHER (1.5), STOPPER	
310	3-670-006-00	GEAR (E)	
311	3-670-169-00	SPRING, TENSION	
312	♦:3-670-031-00	RETAINER (L), CASSETTE	
313	♦:3-646-334-00	CUSHION	
314	♦:3-670-041-00	RETAINER (R), CASSETTE	
315	3-670-005-00	GEAR (B)	
316	3-671-878-00	ROLLER (B), GUIDE	
	3-671-892-00	ROLLER (M), GUIDE	
317	3-670-007-00	GEAR (C)	

No.	Part No	Description	Remark
318	♦:3-670-053-00	SHAFT, JOINT	
319	3-489-310-XX	SPRING, TENSION	
320	♦:3-670-036-00	PLATE (L), SLIDE, C	
321	♦:3-670-037-00	PLATE (R), SLIDE, C	
322	♦:1-605-111-00	CI-2 BOARD	
323	♦:3-670-039-00	HOLDER (R), CSW	
324	1-553-719-00	SWITCH, MICRO	
325	♦:1-605-112-00	CI-3 BOARD	
326	♦:3-670-038-00	HOLDER (L), CSW	
327	3-670-058-00	SPRING, LEAF	
328	3-670-150-21	PLATE, BLIND	
329	♦:3-670-170-00	TUBE, RUBBER	
330	♦:A-672B-247-A	RL-4 BOARD, COMPLETE	
331	3-573-469-00	RETAINER, LEAD, SD	
332	♦:3-670-032-00	RAIL (R)	
333	♦:3-670-012-00	OPEN LID	
334	X-3670-044-0	DOOR ASSY, CASSETTE	335
335	3-670-110-11	PLATE, ORNAMENTAL, CASSETTE DOOR	

(S) CHASSIS ASSEMBLY 1

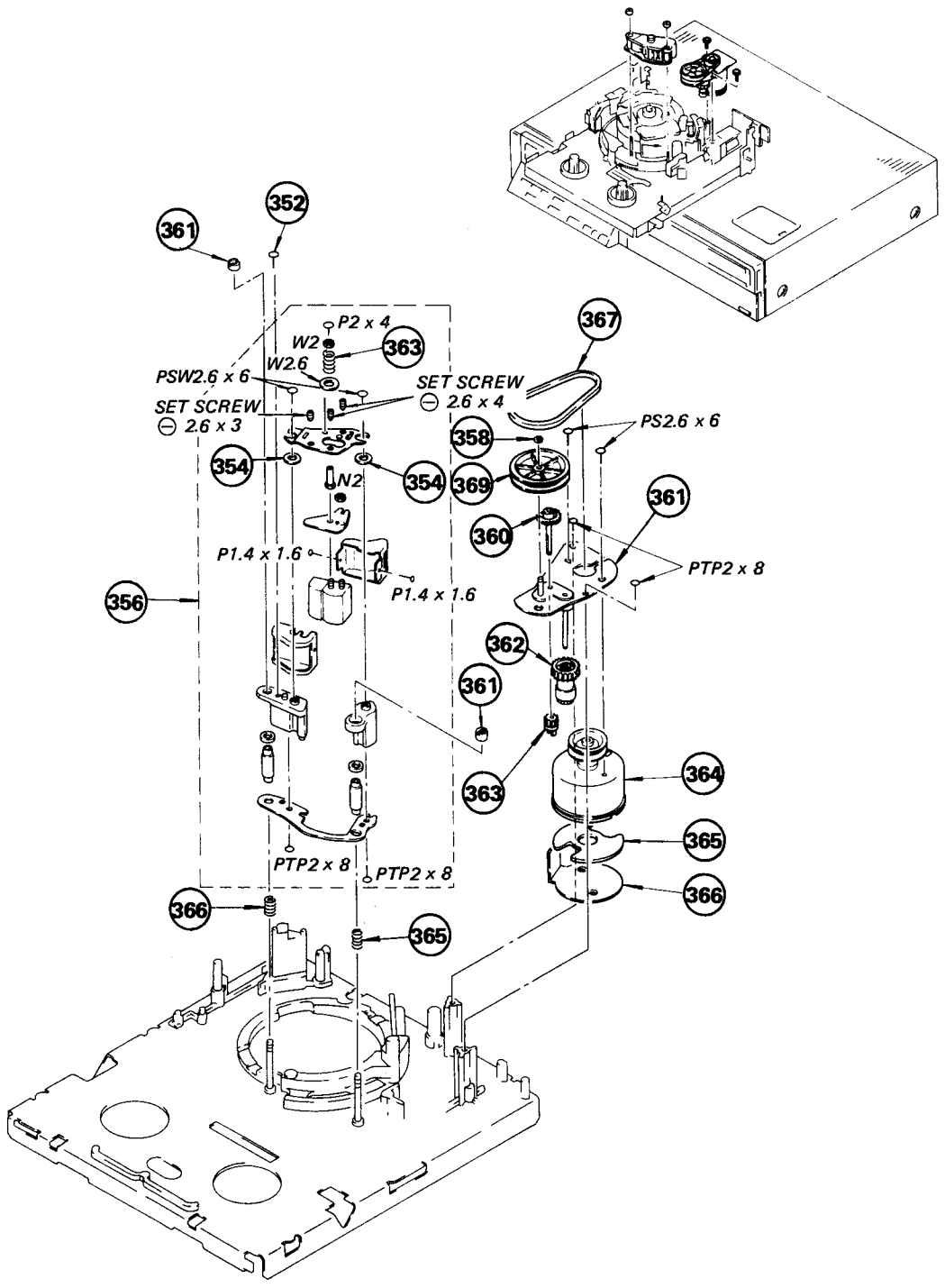

No.	Part No	Description	Remark
351	3-669-318-00	NUT, ADJUSTMENT, GUIDE	
352	3-669-480-11	+ PTPWH 2	
353 ♦	:3-669-316-00	SPRING, COMPRESSION	
354	3-669-598-00	WASHER, CTL	
355	3-669-317-00	SPRING, COMPRESSION	
356	A-6761-043-A	ACE ASSY (M-2)	
357	3-669-327-00	BELT, RUBBER	
358	3-669-465-00	WASHER (1.5), STOPPER	

No.	Part No	Description	Remark
359	3-669-328-00	PULLEY, GEAR	
360	3-669-332-00	GEAR (BA)	
361	X-3669-324-0	CHASSIS ASSY, MOTOR, L	
362	X-3669-321-0	GEAR (C) ASSY	
363	3-669-333-00	GEAR (BC)	
364 ♦	:A-6737-090-A	ASSY, L MOTOR	
365 ♦	:A-6728-243-A	LM-B BOARD, COMPLETE	
366 ♦	:3-669-613-00	INSULATOR, L MOTOR	

(0) CHASSIS ASSEMBLY 2

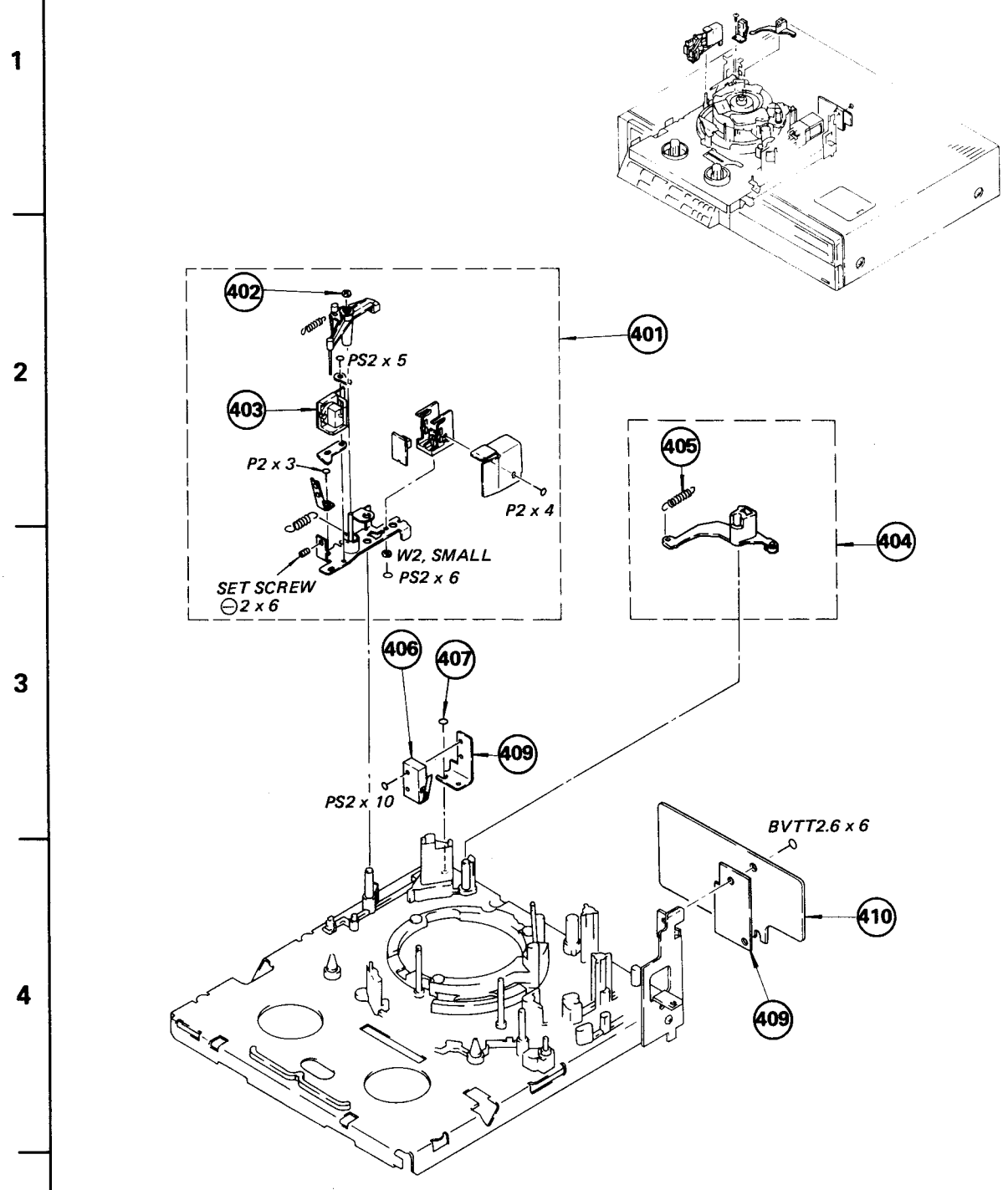

No.	Part No	Description	Remark
401	A-6742-037-A	TP ASSY	
402	3-669-465-00	WASHER (1.5), STOPPER	
403	1-235-054-21	COIL, SENSOR, S	
404	X-3669-351-0	ARM ASSY, LOCK	405
405	3-140-194-XX	SPRING, TENSION	

No.	Part No	Description	Remark
406	1-552-664-00	SWITCH, MICRO	
407	3-669-607-00	+PSW (SMALL ROUND) 2.6	
408 ♦	:3-669-354-00	BRACKET, SWITCH, LE	
409 ♦	:3-670-167-00	INSULATOR	
410 ♦	:1-606-001-00	RL-7 BOARD	

(12) DRUM ASSEMBLY

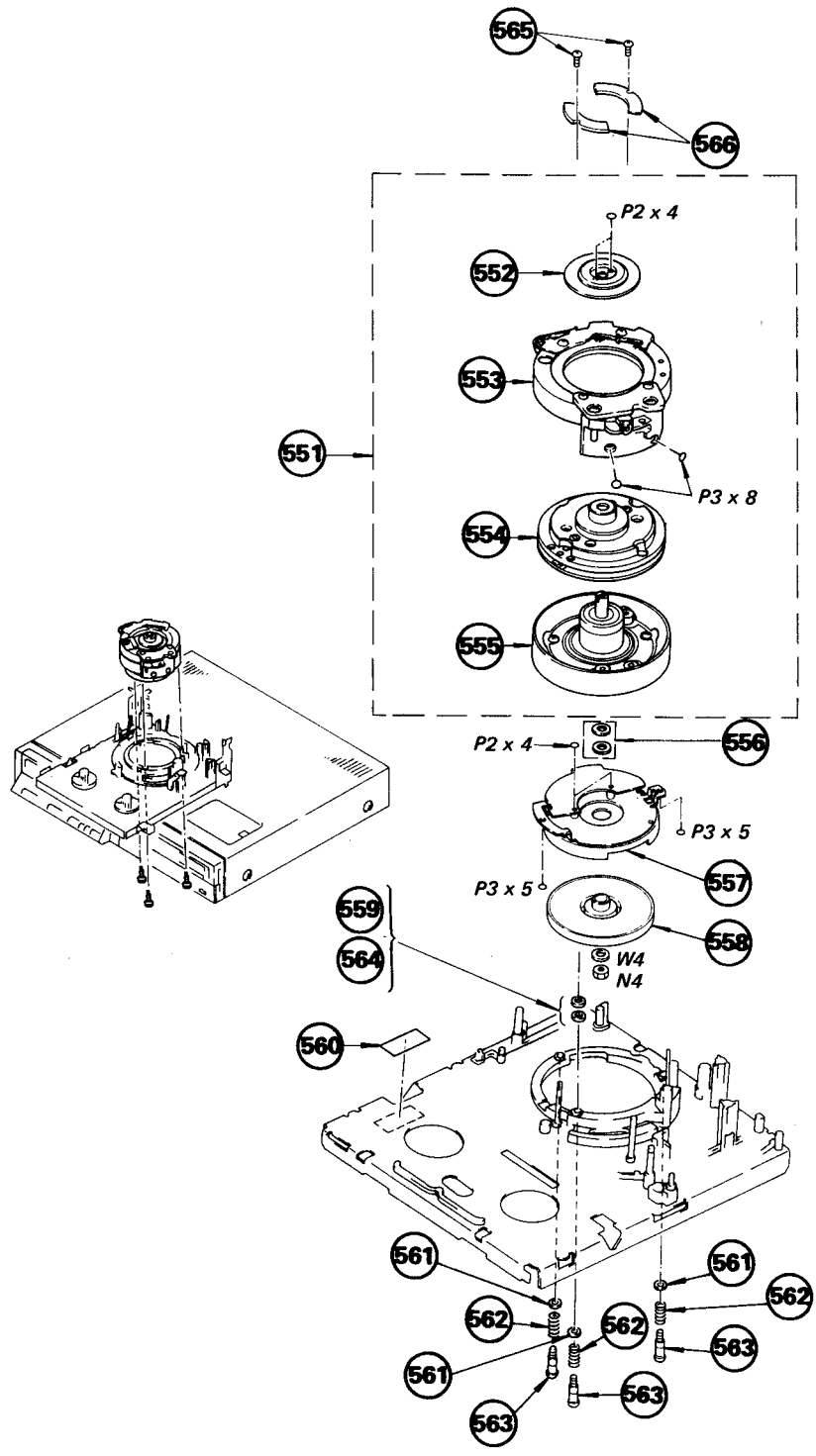

No.	Part No	Description	Remark
551	A-6050-116-A	DRUM ASS'Y DSH-16A-R	
552	X-3669-106-0	DAMPER ASS'Y	
553	A-6760-064-A	DRUM ASS'Y, UPPER	
554	A-6762-061-A	DISK ASS'Y	
555	A-6762-060-B	FLANGE ASS'Y LOWER DRUM	
556	X-3669-105-0	SPACER BLOCK ASS'Y	
557	X-2621-204-2	STATOR ASS'Y, DRUM	
558	X-2621-202-0	ROTAR ASS'Y, DRUM	
559 ♦	3-669-646-00	SPACER, DRUM	
560	3-701-703-0D	KDDA ID MARK	
561	3-669-600-11	WASHER, FLAT (3.5)	
562	3-429-123-D0	SPRING	
563	3-669-302-00	SCREW, FITTING	
564 ♦	3-669-646-11	SPACER, DRUM	
565	3-669-696-D0	SCREW, WEIGHT (M2.6X6)	
566 ♦	3-669-684-0D	WEIGHT	

(13) CHASSIS ASSEMBLY 5

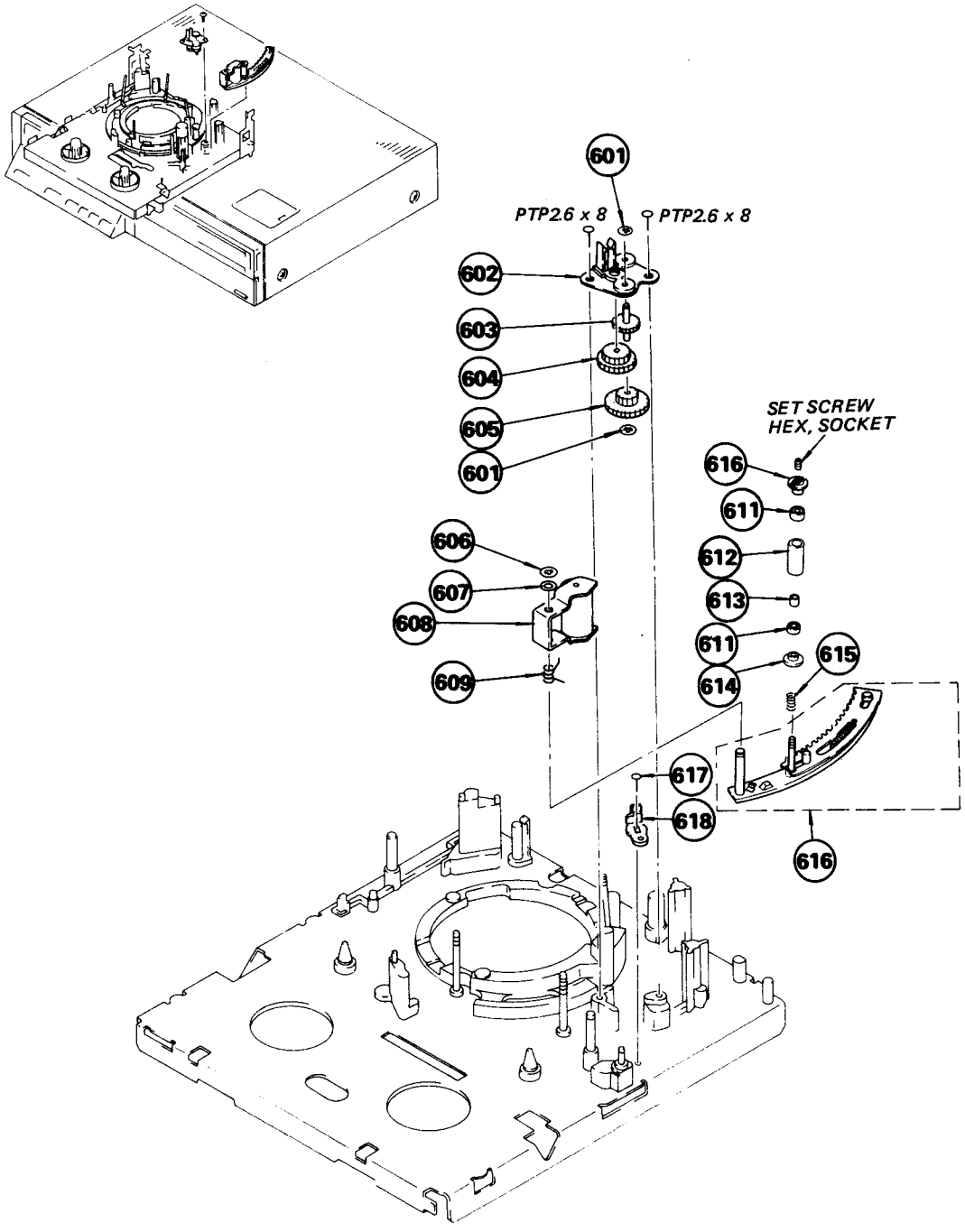

No.	Part No	Description	Remark
601	3-669-465-00	WASHER (1.5), STOPPER	
602	X-3669-326-0	CHASSIS ASSY, GEAR, DRIVE	
603	X-3669-305-0	GEAR (F) ASSY	
604	3-669-338-00	GEAR (E)	
605	3-669-337-00	GEAR (D)	
606	3-669-596-00	WASHER (2.3), STOPPER	
607	3-701-439-01	WASHER	
608	X-3669-307-0	ARM ASSY, PINCH ROLLER	
609	3-669-444-00	SPRING, TORSION	
610	3-669-431-00	FLANGE (UPPER), GUIDE	
611	3-669-443-00	BEARING, BALL (NO FLANGE)	
612	3-669-438-00	ROLLER, GUIDE	
613	3-657-841-31	SPACER (DIA. 2)	
614	3-669-432-00	FLANGE (LOWER), GUIDE	
615	3-669-452-00	SPRING, COMPRESSION	
616 ♦	:X-3669-350-0	GEAR ASSY, SLIDER	
617	3-669-607-11	+PSW (SMALL ROUND) (2.6)	
618 ♦	:3-669-350-00	STOPPER, SLIDER	

(15) CHASSIS ASSEMBLY 7

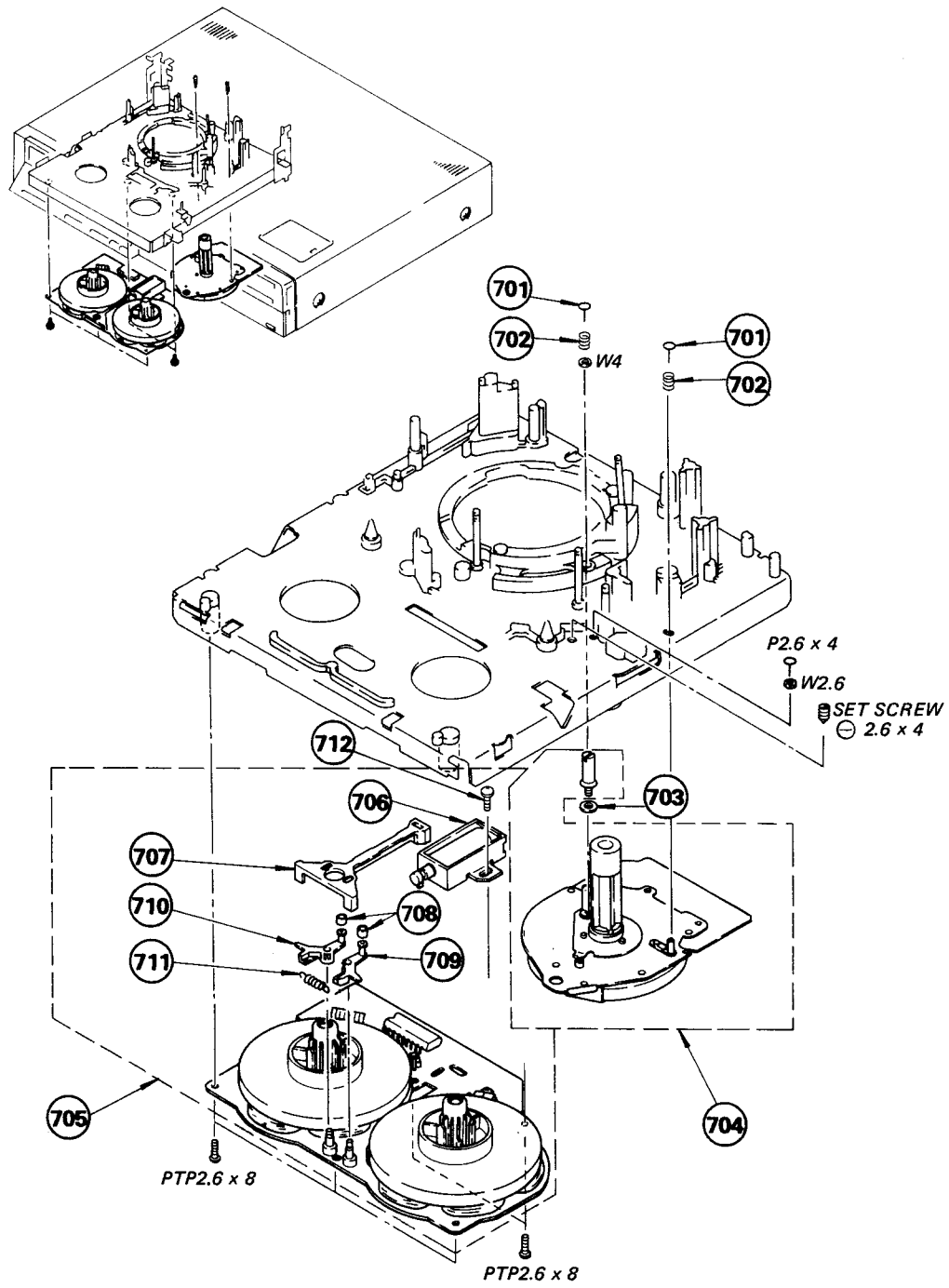

No.	Part No	Description	Remark
701	3-669-633-00	SCREW, + PW2	
702	3-669-602-00	SPRING, COMPRESSION	
703	3-669-697-00	SPACER, CAPSTAN	
704	8-838-022-11	MOTOR, DC (BHF-1900B)	
705 ♦	:A-6737-093-A	BLOCK ASSY, L MOTOR	
706	1-454-281-00	SOLENOID, PLUNGER	
707 ♦	:3-669-530-00	ARM, BRAKE	
708	3-669-305-00	BUSHING	
709 ♦	:3-669-303-00	BRAKE, T	
710 ♦	:3-669-304-00	BRAKE, S	
711	3-491-360-00	SPRING, TENSION	
712	3-669-663-00	+PSW 2.6	

(16) CHASSIS ASSEMBLY 6

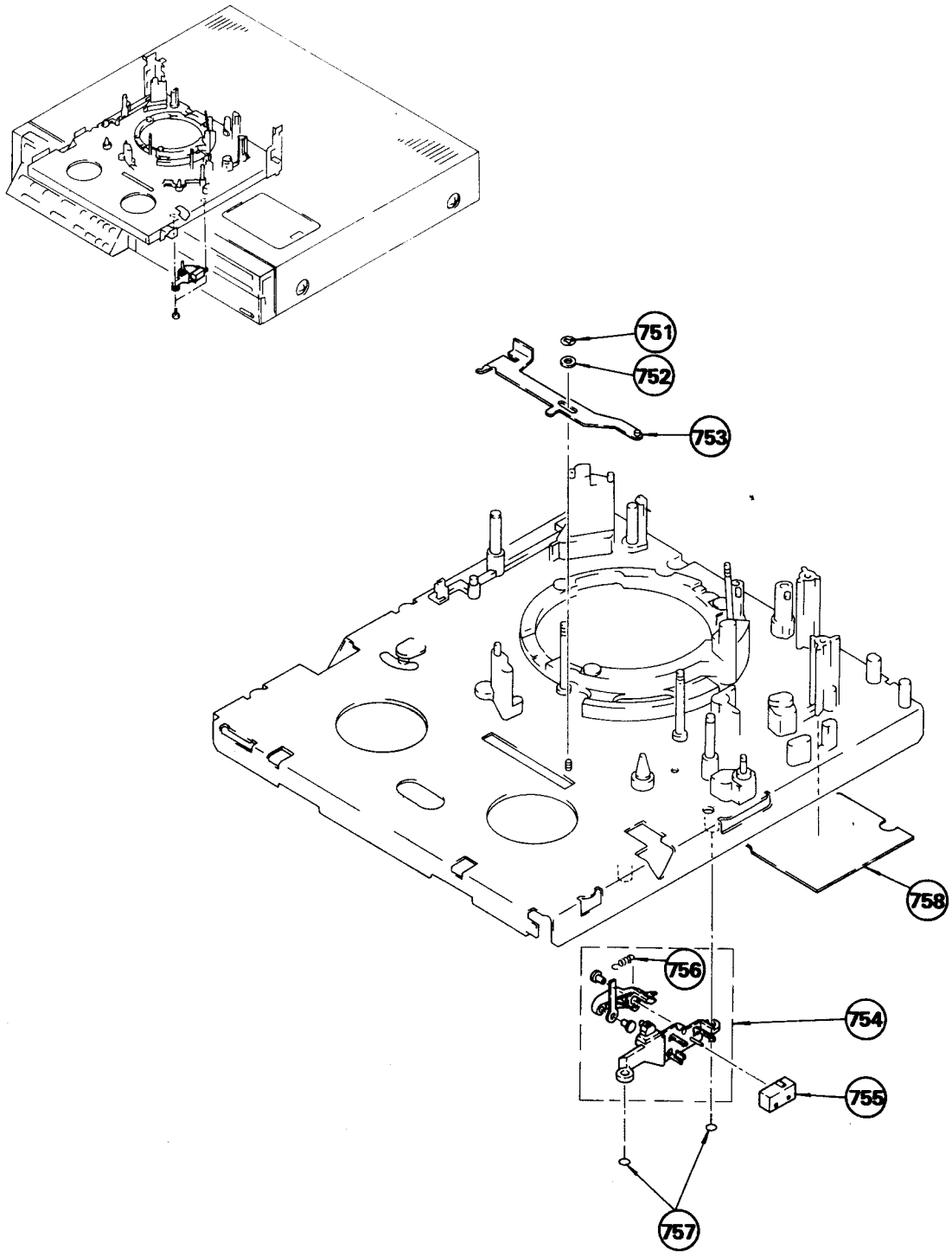

No.	Part No	Description	Remark
751	3-669-595-00	WASHER (2), STOPPER	
752	3-701-438-21	WASHER	
753 ♦	:X-3670-021-0	PLATE ASSY, UNLOCK	
754 ♦	:X-3669-323-0	MR ASSY	

No.	Part No	Description	Remark
755	1-553-717-00	SWITCH, MICRO	
756 ♦	:3-669-411-00	SPRING, TENSION	
757	3-669-480-11	+ PTPWH 2	
758 ♦	:3-669-599-00	INSULATOR	

SECTION 6

ELECTRICAL PARTS LIST

VA-3 BOARD

Ref.No	Part No	Description			Remark
♦	A-6711-293-A	VA-3 BOARD, COMPLETE **********			
♦	3-670-153-00	HOLDER, PCB			
	3-670-164-00	SPACER, JACK			
♦	3-671-851-00	CASE (MAIN), SHIELD, VA-V			
♦	3-671-853-00	LID, REAR, CASE, SHIELD, VA-V			
♦	3-671-854-00	CASE (MAIN), SHIELD, VA-A			
♦	3-671-856-00	LID, REAR, CASE, SHIELD, VA-A			
	3-671-893-00	CLAMP (LOW TYPE)			
	3-701-444-11	WASHER, 6			

CAPACITOR

C001	1-123-838-00	ELECT	1000MF	20%	6.3V
C002	1-123-838-00	ELECT	1000MF	20%	6.3V
C003	1-161-013-00	CERAMIC	0.01MF	10%	25V
C004	1-102-950-00	CERAMIC	13PF	5%	50V
C008	1-102-971-00	CERAMIC	82PF	5%	50V
C009	1-123-381-00	ELECT	2.2MF	20%	50V
C010	1-102-972-00	CERAMIC	91PF	5%	50V
C011	1-123-381-00	ELECT	2.2MF	20%	50V
C012	1-101-884-00	CERAMIC	56PF	5%	50V
C013	1-123-381-00	ELECT	2.2MF	20%	50V
C014	1-161-013-00	CERAMIC	0.01MF	10%	25V
C015	1-161-013-00	CERAMIC	0.01MF	10%	25V
C016	1-161-013-00	CERAMIC	0.01MF	10%	25V
C017	1-123-381-00	ELECT	2.2MF	20%	50V
C018	1-123-356-00	ELECT	10MF	20%	16V
C019	1-161-013-00	CERAMIC	0.01MF	10%	25V
C020	1-161-021-00	CERAMIC	0.047MF	10%	25V
C021	1-123-318-00	ELECT	33MF	20%	16V
C022	1-102-963-00	CERAMIC	33PF	5%	50V
C023	1-101-880-00	CERAMIC	47PF	5%	50V
C025	1-101-361-00	CERAMIC	150PF	5%	50V
C026	1-123-356-00	ELECT	10MF	20%	16V
C027	1-101-884-00	CERAMIC	56PF	5%	50V
C028	1-102-971-00	CERAMIC	82PF	5%	50V
C029	1-102-966-00	CERAMIC	43PF	5%	50V
C030	1-102-947-00	CERAMIC	10PF	5%	50V
C031	1-161-021-00	CERAMIC	0.047MF	10%	25V
C032	1-102-820-00	CERAMIC	330PF	5%	50V
C033	1-102-118-00	CERAMIC	0.0012MF	10%	50V
C034	1-161-021-00	CERAMIC	0.047MF	10%	25V
C035	1-102-947-00	CERAMIC	10PF	5%	50V
C036	1-123-330-00	ELECT	22MF	20%	16V
C037	1-123-356-00	ELECT	10MF	20%	16V
C038	1-161-013-00	CERAMIC	0.01MF	10%	25V
C039	1-123-380-00	ELECT	1MF	20%	50V
C040	1-123-380-00	ELECT	1MF	20%	50V
C041	1-102-965-00	CERAMIC	39PF	5%	50V
C042	1-123-340-00	ELECT	4.7MF	20%	35V
C043	1-102-074-00	CERAMIC	0.001MF	10%	50V
C044	1-123-305-00	ELECT	33MF	20%	10V
C045	1-102-074-00	CERAMIC	0.001MF	10%	50V
C046	1-102-947-00	CERAMIC	10PF	5%	50V
C047	1-123-330-00	ELECT	22MF	20%	16V
C048	1-102-947-00	CERAMIC	10PF	5%	50V
C049	1-102-947-00	CERAMIC	10PF	5%	50V
C050	1-123-330-00	ELECT	22MF	20%	16V
C051	1-123-340-00	ELECT	4.7MF	20%	35V
C052	1-123-330-00	ELECT	22MF	20%	16V
C053	1-123-330-00	ELECT	22MF	20%	16V
C054	1-123-330-00	ELECT	22MF	20%	16V
C055	1-102-962-00	CERAMIC	30PF	5%	50V
C056	1-101-888-00	CERAMIC	68PF	5%	50V
C057	1-102-936-00	CERAMIC	3PF	0.25PF	50V
C058	1-161-013-00	CERAMIC	0.01MF	10%	25V
C059	1-123-381-00	ELECT	2.2MF	20%	50V
C060	1-123-356-00	ELECT	10MF	20%	16V
C061	1-123-305-00	ELECT	33MF	20%	10V
C062	1-123-356-00	ELECT	10MF	20%	16V
C063	1-123-305-00	ELECT	33MF	20%	10V
C064	1-123-356-00	ELECT	10MF	20%	16V
C065	1-123-305-00	ELECT	33MF	20%	10V
C066	1-101-888-00	CERAMIC	68PF	5%	50V
C067	1-102-964-00	CERAMIC	36PF	5%	50V
C068	1-102-953-00	CERAMIC	18PF	5%	50V
C069	1-161-013-00	CERAMIC	0.01MF	10%	25V
C070	1-102-963-00	CERAMIC	33PF	5%	50V
C071	1-102-816-00	CERAMIC	120PF	5%	50V
C072	1-101-884-00	CERAMIC	56PF	5%	50V
C073	1-102-973-00	CERAMIC	100PF	5%	50V
C074	1-123-356-00	ELECT	10MF	20%	16V
C075	1-123-356-00	ELECT	10MF	20%	16V
C076	1-101-888-00	CERAMIC	68PF	5%	50V
C078	1-161-013-00	CERAMIC	0.01MF	10%	25V
C079	1-161-013-00	CERAMIC	0.01MF	10%	25V
C080	1-161-013-00	CERAMIC	0.01MF	10%	25V
C081	1-123-330-00	ELECT	22MF	20%	16V
C082	1-101-059-00	CERAMIC	510PF	5%	50V
C083	1-123-356-00	ELECT	10MF	20%	16V
C084	1-123-356-00	ELECT	10MF	20%	16V
C086	1-102-074-00	CERAMIC	0.001MF	10%	50V
C089	1-123-333-00	ELECT	100MF	20%	16V
C090	1-123-356-00	ELECT	10MF	20%	16V
C091	1-123-307-00	ELECT	100MF	20%	10V
C092	1-123-330-00	ELECT	22MF	20%	16V
C093	1-123-607-00	ELECT	0.1MF	20%	50V
C094	1-123-332-00	ELECT	47MF	20%	16V
C095	1-123-610-00	ELECT	0.47MF	20%	50V
C096	1-161-021-00	CERAMIC	0.047MF	10%	25V
C097	1-123-318-00	ELECT	33MF	20%	16V
C098	1-130-495-00	MYLAR	0.1MF	5%	50V
C099	1-123-356-00	ELECT	10MF	20%	16V
C100	1-123-380-00	ELECT	1MF	20%	50V
C101	1-102-977-00	CERAMIC	200PF	5%	50V

NOTE:

The components identified by shading and mark ⚠ are critical for safety. Replace only with part number specified.

Les composants identifiés par une trame et une marque ⚠ sont critiques pour la sécurité. Ne les remplacer que par une pièce portant le numéro spécifié.

When indicating parts by reference number, please include the board name.

- =>: Due to standardization, interchangeable replacements may be substituted for parts specified in the diagrams.
- Items marked " ♦ " are not stocked since they are seldom required for routine service. Some delay should be anticipated when ordering these items.

- All variable and adjustable resistors have characteristic curve B, unless otherwise noted.

CAPACITORS
- MF : μF, PF : μμF

RESISTORS
- All resistors are in ohms
- F : nonflammable

COILS
- MMH : mH, UH : μH

VA-3 BOARD

Ref.No	Part No	Description			Remark
C102	1-102-820-00	CERAMIC	330PF	5%	50V
C103	1-123-356-00	ELECT	10MF	20%	16V
C104	1-108-591-00	MYLAR	0.033MF	5%	50V
C105	1-101-059-00	CERAMIC	510PF	5%	50V
C106	1-161-021-00	CERAMIC	0.047MF	10%	25V
C107	1-108-555-00	MYLAR	0.001MF	5%	50V
C108	1-102-820-00	CERAMIC	330PF	5%	50V
C109	1-108-555-00	MYLAR	0.001MF	5%	50V
C110	1-123-356-00	ELECT	10MF	20%	16V
C111	1-161-021-00	CERAMIC	0.047MF	10%	25V
C112	1-123-306-00	ELECT	47MF	20%	10V
C113	1-123-305-00	ELECT	33MF	20%	10V
C114	1-101-888-00	CERAMIC	68PF	5%	50V
C115	1-102-963-00	CERAMIC	33PF	5%	50V
C116	1-101-059-00	CERAMIC	510PF	5%	50V
C120	1-102-116-00	CERAMIC	680PF	10%	50V
C121	1-102-116-00	CERAMIC	680PF	10%	50V
C122	1-123-380-00	ELECT	1MF	20%	50V
C123	1-123-379-00	ELECT	0.47MF	20%	50V
C124	1-123-380-00	ELECT	1MF	20%	50V
C125	1-123-356-00	ELECT	10MF	20%	16V
C126	1-123-356-00	ELECT	10MF	20%	16V
C127	1-102-951-00	CERAMIC	15PF	5%	50V
C128	1-161-013-00	CERAMIC	0.01MF	10%	25V
C129	1-101-888-00	CERAMIC	68PF	5%	50V
C130	1-101-888-00	CERAMIC	68PF	5%	50V
C131	1-161-013-00	CERAMIC	0.01MF	10%	25V
C132	1-102-978-00	CERAMIC	220PF	5%	50V
C133	1-123-379-00	ELECT	0.47MF	20%	50V
C134	1-161-013-00	CERAMIC	0.01MF	10%	25V
C135	1-123-356-00	ELECT	10MF	20%	16V
C136	1-123-382-00	ELECT	3.3MF	20%	50V
C137	1-102-074-00	CERAMIC	0.001MF	10%	50V
C138	1-161-013-00	CERAMIC	0.01MF	10%	25V
C139	1-161-013-00	CERAMIC	0.01MF	10%	25V
C140	1-161-013-00	CERAMIC	0.01MF	10%	25V
C141	1-102-074-00	CERAMIC	0.001MF	10%	50V
C142	1-161-013-00	CERAMIC	0.01MF	10%	25V
C143	1-123-356-00	ELECT	10MF	20%	16V
C144	1-102-816-00	CERAMIC	120PF	5%	50V
C145	1-161-013-00	CERAMIC	0.01MF	10%	25V
C146	1-123-380-00	ELECT	1MF	20%	50V
C149	1-161-013-00	CERAMIC	0.01MF	10%	25V
C150	1-123-340-00	ELECT	4.7MF	20%	35V
C151	1-131-345-00	ELECT(SOLID)	0.47MF	10%	25V
C152	1-161-013-00	CERAMIC	0.01MF	10%	25V
C153	1-161-013-00	CERAMIC	0.01MF	10%	25V
C155	1-161-013-00	CERAMIC	0.01MF	10%	25V
C156	1-161-013-00	CERAMIC	0.01MF	10%	25V
C157	1-123-039-00	ELECT	22MF	20%	16V
C158	1-131-347-00	ELECT(SOLID)	1MF	20%	16V
C159	1-123-356-00	ELECT	10MF	20%	16V
C160	1-123-356-00	ELECT	10MF	20%	16V
C161	1-123-356-00	ELECT	10MF	20%	16V
C162	1-123-356-00	ELECT	10MF	20%	16V
C163	1-161-013-00	CERAMIC	0.01MF	10%	25V
C164	1-123-356-00	ELECT	10MF	20%	16V
C165	1-123-305-00	ELECT	33MF	20%	10V
C166	1-130-495-00	MYLAR	0.1MF	5%	50V
C167	1-123-381-00	ELECT	2.2MF	20%	50V
C168	1-123-382-00	ELECT	3.3MF	20%	50V
C169	1-123-382-00	ELECT	3.3MF	20%	50V
C170	1-123-330-00	ELECT	22MF	20%	16V
C171	1-102-948-00	CERAMIC	11PF	5%	50V
C172	1-123-356-00	ELECT	10MF	20%	16V
C174	1-102-074-00	CERAMIC	0.001MF	10%	50V
C176	1-102-947-00	CERAMIC	10PF	5%	50V
C178	1-108-583-00	MYLAR	0.015MF	5%	50V
C179	1-102-074-00	CERAMIC	0.001MF	10%	50V
C180	1-102-074-00	CERAMIC	0.001MF	10%	50V
C181	1-102-074-00	CERAMIC	0.001MF	10%	50V
C182	1-102-074-00	CERAMIC	0.001MF	10%	50V
C183	1-161-021-00	CERAMIC	0.047MF	10%	25V
C184	1-161-013-00	CERAMIC	0.01MF	10%	25V
C185	1-161-013-00	CERAMIC	0.01MF	10%	25V
C186	1-102-951-00	CERAMIC	15PF	5%	50V
C187	1-102-959-00	CERAMIC	22PF	5%	50V
C188	1-123-382-00	ELECT	3.3MF	20%	50V
C189	1-123-039-00	ELECT	22MF	20%	16V
C190	1-161-013-00	CERAMIC	0.01MF	10%	25V
C191	1-161-039-00	CERAMIC	0.001MF	10%	25V
C192	1-161-013-00	CERAMIC	0.01MF	10%	25V
C193	1-161-013-00	CERAMIC	0.01MF	10%	25V
C194	1-161-021-00	CERAMIC	0.047MF	10%	25V
C195	1-123-380-00	ELECT	1MF	20%	50V
C196	1-102-962-00	CERAMIC	30PF	5%	50V
C197	1-161-013-00	CERAMIC	0.01MF	10%	25V
C198	1-123-380-00	ELECT	1MF	20%	50V
C199	1-102-973-00	CERAMIC	100PF	5%	50V
C200	1-161-021-00	CERAMIC	0.047MF	10%	25V
C201	1-102-973-00	CERAMIC	100PF	5%	50V
C203	1-101-361-00	CERAMIC	150PF	5%	50V
C204	1-161-013-00	CERAMIC	0.01MF	10%	25V
C206	1-123-380-00	ELECT	1MF	20%	50V
C207	1-123-380-00	ELECT	1MF	20%	50V
C208	1-161-021-00	CERAMIC	0.047MF	10%	25V
C209	1-161-021-00	CERAMIC	0.047MF	10%	25V
C210	1-102-958-00	CERAMIC	20PF	5%	50V
C211	1-161-013-00	CERAMIC	0.01MF	10%	25V
C212	1-161-013-00	CERAMIC	0.01MF	10%	25V
C215	1-161-013-00	CERAMIC	0.01MF	10%	25V
C216	1-102-973-00	CERAMIC	100PF	5%	50V
C217	1-161-021-00	CERAMIC	0.047MF	10%	25V
C218	1-123-381-00	ELECT	2.2MF	20%	50V
C220	1-101-888-00	CERAMIC	68PF	5%	50V
C222	1-161-021-00	CERAMIC	0.047MF	10%	25V

NOTE:

The components identified by shading and mark ⚠ are critical for safety. Replace only with part number specified.

Les composants identifiés par une trame et une marque ⚠ sont critiques pour la sécurité. Ne les remplacer que par une pièce portant le numéro spécifié.

When indicating parts by reference number, please include the board name.

- =>: Due to standardization, interchangeable replacements may be substituted for parts specified in the diagrams.
- Items marked " ♦ " are not stocked since they are seldom required for routine service. Some delay should be anticipated when ordering these items.
- All variable and adjustable resistors have characteristic curve B, unless otherwise noted.

CAPACITORS
- MF : μF, PF : μμF

RESISTORS
- All resistors are in ohms
- F : nonflammable

COILS
- MMH : mH, UH : μH

Ref.No	Part No	Description			Remark
C223	1-161-063-00	CERAMIC	0.1MF	20%	25V
C224	1-102-958-00	CERAMIC	20PF	5%	50V
C226	1-161-021-00	CERAMIC	0.047MF	10%	25V
C228	1-161-021-00	CERAMIC	0.047MF	10%	25V
C230	1-123-330-00	ELECT	22MF	20%	16V
C232	1-161-013-00	CERAMIC	0.01MF	10%	25V
C301	1-102-516-00	CERAMIC	27PF	5%	50V
C302	1-161-021-00	CERAMIC	0.047MF	10%	25V
C303	1-161-021-00	CERAMIC	0.047MF	10%	25V
C304	1-102-074-00	CERAMIC	0.001MF	10%	50V
C305	1-102-074-00	CERAMIC	0.001MF	10%	50V
C306	1-161-005-00	CERAMIC	0.0022MF	10%	25V
C307	1-161-021-00	CERAMIC	0.047MF	10%	25V
C308	1-161-013-00	CERAMIC	0.01MF	10%	25V
C310	1-102-959-00	CERAMIC	22PF	5%	50V
C311	1-161-013-00	CERAMIC	0.01MF	10%	25V
C312	1-161-013-00	CERAMIC	0.01MF	10%	25V
C313	1-161-013-00	CERAMIC	0.01MF	10%	25V
C314	1-102-963-00	CERAMIC	33PF	5%	50V
C315	1-161-021-00	CERAMIC	0.047MF	10%	25V
C317	1-102-125-00	CERAMIC	0.0047MF	10%	50V
C318	1-123-340-00	ELECT	4.7MF	20%	35V
C319	1-161-013-00	CERAMIC	0.01MF	10%	25V
C320	1-102-958-00	CERAMIC	20PF	5%	50V
C321	1-161-021-00	CERAMIC	0.047MF	10%	25V
C323	1-108-573-00	MYLAR	0.0056MF	5%	50V
C325	1-123-332-00	ELECT	47MF	20%	16V
C328	1-161-021-00	CERAMIC	0.047MF	10%	25V
C329	1-161-021-00	CERAMIC	0.047MF	10%	25V
C332	1-102-953-00	CERAMIC	18PF	5%	50V
C333	1-102-961-00	CERAMIC	27PF	5%	50V
C500	1-108-555-00	MYLAR	0.001MF	5%	50V
C501	1-108-561-00	MYLAR	0.0018MF	5%	50V
C502	1-102-116-00	CERAMIC	680PF	10%	50V
C503	1-123-294-00	ELECT	47MF	20%	6.3V
C504	1-123-306-00	ELECT	47MF	20%	10V
C505	1-123-356-00	ELECT	10MF	20%	16V
C506	1-108-587-00	MYLAR	0.022MF	5%	50V
C507	1-102-963-00	CERAMIC	33PF	5%	50V
C508	1-123-356-00	ELECT	10MF	20%	16V
C509	1-108-593-00	MYLAR	0.039MF	5%	50V
C510	1-108-583-00	MYLAR	0.015MF	5%	50V
C511	1-108-591-00	MYLAR	0.033MF	5%	50V
C512	1-123-330-00	ELECT	22MF	20%	16V
C513	1-102-980-00	CERAMIC	270PF	5%	50V
C514	1-123-356-00	ELECT	10MF	20%	16V
C515	1-123-379-00	ELECT	0.47MF	20%	50V
C516	1-129-710-00	FILM	0.0047MF	10%	630V
C517	1-108-571-00	MYLAR	0.0047MF	5%	50V
C518	1-108-567-00	MYLAR	0.0033MF	5%	50V
C519	1-123-306-00	ELECT	47MF	20%	10V
C520	1-123-356-00	ELECT	10MF	20%	16V
C521	1-123-381-00	ELECT	2.2MF	20%	50V
C522	1-123-381-00	ELECT	2.2MF	20%	50V
C523	1-123-381-00	ELECT	2.2MF	20%	50V
C524	1-123-306-00	ELECT	47MF	20%	10V
C525	1-123-356-00	ELECT	10MF	20%	16V
C526	1-108-555-00	MYLAR	0.001MF	5%	50V
C527	1-102-824-00	CERAMIC	430PF	5%	50V
C528	1-123-356-00	ELECT	10MF	20%	16V
C529	1-123-356-00	ELECT	10MF	20%	16V
C530	1-123-307-00	ELECT	100MF	20%	10V
C531	1-123-328-00	ELECT	4.7MF	20%	25V
C532	1-123-328-00	ELECT	4.7MF	20%	25V
C534	1-123-380-00	ELECT	1MF	20%	50V
C537	1-123-356-00	ELECT	10MF	20%	16V
C541	1-108-583-00	MYLAR	0.015MF	5%	50V
C542	1-108-579-00	MYLAR	0.01MF	5%	50V
C543	1-108-599-00	MYLAR	0.068MF	5%	50V
C544	1-102-961-00	CERAMIC	27PF	5%	50V
C545	1-108-555-00	MYLAR	0.001MF	5%	50V
C546	1-123-356-00	ELECT	10MF	20%	16V
C547	1-123-332-00	ELECT	47MF	20%	16V
C549	1-123-356-00	ELECT	10MF	20%	16V
C550	1-123-356-00	ELECT	10MF	20%	16V
C551	1-102-973-00	CERAMIC	100PF	5%	50V
C552	1-123-380-00	ELECT	1MF	20%	50V
C553	1-102-973-00	CERAMIC	100PF	5%	50V
C553	1-108-571-00	MYLAR	0.0047MF	5%	50V
C554	1-102-118-00	CERAMIC	0.0012MF	10%	50V
C555	1-123-356-00	ELECT	10MF	20%	16V
C556	1-123-356-00	ELECT	10MF	20%	16V
C557	1-123-356-00	ELECT	10MF	20%	16V
C558	1-123-356-00	ELECT	10MF	20%	16V
C559	1-123-380-00	ELECT	1MF	20%	50V
C560	1-102-961-00	CERAMIC	27PF	5%	50V
C561	1-123-356-00	ELECT	10MF	20%	16V
C562	1-123-332-00	ELECT	47MF	20%	16V
C563	1-161-021-00	CERAMIC	0.047MF	10%	25V
C564	1-161-021-00	CERAMIC	0.047MF	10%	25V
C565	1-161-021-00	CERAMIC	0.047MF	10%	25V
C566	1-161-021-00	CERAMIC	0.047MF	10%	25V
C567	1-123-356-00	ELECT	10MF	20%	16V
C568	1-161-021-00	CERAMIC	0.047MF	10%	25V
C570	1-123-356-00	ELECT	10MF	20%	16V
C571	1-123-356-00	ELECT	10MF	20%	16V
C583	1-161-021-00	CERAMIC	0.047MF	10%	25V
C591	1-123-294-00	ELECT	47MF	20%	6.3V
C592	1-123-318-00	ELECT	33MF	20%	16V

FILTER

CF001	1-527-831-00	FILTER, CERAMIC
CF002	1-527-823-00	FILTER, CERAMIC
CF003	1-527-823-00	FILTER, CERAMIC
CF004	1-231-302-00	CERAMIC FILTER (4.27MHZ)

NOTE:

The components identified by shading and mark ⚠ are critical for safety. Replace only with part number specified.

Les composants identifiés par une trame et une marque ⚠ sont critiques pour la sécurité. Ne les remplacer que par une pièce portant le numéro spécifié.

When indicating parts by reference number, please include the board name.

- =>: Due to standardization, interchangeable replacements may be substituted for parts specified in the diagrams.
- Items marked " ♦ " are not stocked since they are seldom required for routine service. Some delay should be anticipated when ordering these items.

- All variable and adjustable resistors have characteristic curve B, unless otherwise noted.

CAPACITORS
- MF : μF, PF : μμF

RESISTORS
- All resistors are in ohms
- F : nonflammable

COILS
- MMH : mH, UH : μH

VA-3 BOARD

Ref.No	Part No	Description	Remark
		CONNECTOR	
CN001♦	1-560-471-00	PIN, CONNECTOR 10P	
CN002♦	1-560-461-00	PIN, CONNECTOR 5P	
CN003♦	1-560-470-00	PIN, CONNECTOR 8P	
CN004♦	1-560-471-00	PIN, CONNECTOR 10P	
CN005♦	1-560-469-00	PIN, CONNECTOR 6P	
CN006♦	1-560-467-00	PIN, CONNECTOR 4P	
CN007	1-561-690-00	CONNECTOR, CAMERA 14P	
CN009♦	1-560-468-00	PIN, CONNECTOR 5P	
CN011♦	1-560-470-00	PIN, CONNECTOR 8P	
CN012	1-561-703-00	CONNECTOR, DIN 8P	
CN500♦	1-560-469-00	PIN, CONNECTOR 6P	
CN505♦	1-560-466-00	PIN, CONNECTOR 3P	
CN506♦	1-560-469-00	PIN, CONNECTOR 6P	
CN507♦	1-560-468-00	PIN, CONNECTOR 5P	
CN509♦	1-560-469-00	PIN, CONNECTOR 6P	
CN510	1-507-251-XX	JACK	
CN511	1-507-251-XX	JACK	
		TRIMER	
CT500	1-141-215-00	CAP, TRIMER 100PF	
		DIODE	
D001	8-719-911-19	DIODE 1SS119	
D002	8-719-911-19	DIODE 1SS119	
D003	8-719-911-19	DIODE 1SS119	
D004	8-719-911-19	DIODE 1SS119	
D005	8-719-911-19	DIODE 1SS119	
D006	8-719-911-19	DIODE 1SS119	
D007	8-719-911-19	DIODE 1SS119	
D008	8-719-113-07	DIODE RD13E-B	
D009	8-719-113-07	DIODE RD13E-B	
D010	8-719-113-07	DIODE RD13E-B	
D011	8-719-118-07	DIODE RD18E-B	
D012	8-719-118-07	DIODE RD18E-B	
D013	8-719-113-07	DIODE RD13E-B	
D014	8-719-113-07	DIODE RD13E-B	
D015	8-719-113-07	DIODE RD13E-B	
D016	8-719-113-07	DIODE RD13E-B	
D017	8-719-113-07	DIODE RD13E-B	
D018	8-719-911-19	DIODE 1SS119	
D019	8-719-191-07	DIODE RD9.1E-B	
D020	8-719-191-07	DIODE RD9.1E-B	
D021	8-719-911-19	DIODE 1SS119	
D022	8-719-911-19	DIODE 1SS119	
D023	8-719-113-07	DIODE RD13E-B	
D024	8-719-911-19	DIODE 1SS119	
D025	8-719-911-19	DIODE 1SS119	
D500	8-719-911-19	DIODE 1SS119	
D501	8-719-911-19	DIODE 1SS119	
D502	8-719-911-19	DIODE 1SS119	
D503	8-719-911-19	DIODE 1SS119	
D504	8-719-911-19	DIODE 1SS119	
D505	8-719-911-19	DIODE 1SS119	
D506	8-719-911-19	DIODE 1SS119	
D507	8-719-911-19	DIODE 1SS119	
D508	8-719-911-19	DIODE 1SS119	
D510	8-719-911-19	DIODE 1SS119	
D513	8-719-911-19	DIODE 1SS119	
D514	8-719-911-19	DIODE 1SS119	
D515	=>8-719-911-19	DIODE 1SS119	
D516	=>8-719-911-19	DIODE 1SS119	
D517	=>8-719-911-19	DIODE 1SS119	
D518	8-719-911-19	DIODE 1SS119	
D519	8-719-911-19	DIODE 1SS119	
D540	8-719-911-19	DIODE 1SS119	
		DELAY LINE	
DL001	1-415-243-00	DELAY LINE (1H)	
DL002	1-415-065-00	DELAY LINE (1H)	
DL003	1-415-244-21	DELAY LINE (1/2H)	
DL004	1-415-245-00	DELAY LINE (1/4H)	
		IC	
IC001	8-743-945-10	IC BX-3945-1	
IC002	8-743-946-10	IC BX-3946-1	
IC003	8-759-608-64	IC CX-864	
IC004	8-759-608-65	IC CX-865	
IC005	8-758-660-00	IC CX-866	
IC006	8-759-208-67	IC CX-867	
IC007	8-759-908-68	IC CX-868	
IC008	8-758-690-00	IC CX-869	
IC010	8-759-919-05	IC CX-7905A	
IC011	8-743-955-00	IC BX-3955	
IC012	8-743-956-10	IC BX-3956-1	
IC014	8-743-958-10	IC BX-3958-1	
IC015	8-743-959-10	IC BX-3959-1	
IC016	8-759-208-92	IC CX-892	
IC017	8-759-208-94	IC CX-894	
IC018	8-752-000-80	IC CX20008	
IC091	=>8-759-600-08	IC CX-870A	
IC092	8-759-608-82	IC CX-882	
IC500	8-759-240-66	IC TC4066BP	
		COIL	
L001	1-408-620-11	MICRO INDUCTOR 270UH	
L002	1-408-620-11	MICRO INDUCTOR 270UH	
L003	1-408-408-00	MICRO INDUCTOR 8.2UH	
L004	1-408-408-00	MICRO INDUCTOR 8.2UH	
L005	1-408-409-00	MICRO INDUCTOR 10UH	
L006	1-408-427-00	MICRO INDUCTOR 330UH	
L007	1-408-418-00	MICRO INDUCTOR 56UH	
L008	1-408-417-00	MICRO INDUCTOR 47UH	
L009	1-408-414-00	MICRO INDUCTOR 27UH	
L010	1-408-397-00	MICRO INDUCTOR 1UH	

NOTE:

The components identified by shading and mark ⚠ are critical for safety. Replace only with part number specified.

Les composants identifiés par une trame et une marque ⚠ sont critiques pour la sécurité. Ne les remplacer que par une pièce portant le numéro spécifié.

When indicating parts by reference number, please include the board name.

- =>: Due to standardization, interchangeable replacements may be substituted for parts specified in the diagrams.
- Items marked " ♦ " are not stocked since they are seldom required for routine service. Some delay should be anticipated when ordering these items.
- All variable and adjustable resistors have characteristic curve B, unless otherwise noted.

CAPACITORS
- MF : μF, PF : μμF

RESISTORS
- All resistors are in ohms
- F : nonflammable

COILS
- MMH : mH, UH : μH

Ref.No	Part No	Description	Remark
L011	1-408-397-00	MICRO INDUCTOR 1UH	
L012	1-408-423-00	MICRO INDUCTOR 150UH	
L013	1-408-419-00	MICRO INDUCTOR 68UH	
L014	1-408-418-00	MICRO INDUCTOR 56UH	
L015	1-408-414-00	MICRO INDUCTOR 27UH	
L016	1-408-414-00	MICRO INDUCTOR 27UH	
L017	1-408-402-00	MICRO INDUCTOR 2.7UH	
L019	1-408-401-00	MICRO INDUCTOR 2.2UH	
L021	1-408-422-00	MICRO INDUCTOR 120UH	
L022	1-408-427-00	MICRO INDUCTOR 330UH	
L023	1-408-423-00	MICRO INDUCTOR 150UH	
L024	1-407-502-31	MICRO INDUCTOR 6.8MMH	
L026	1-408-425-00	MICRO INDUCTOR 220UH	
L027	1-408-417-00	MICRO INDUCTOR 47UH	
L029	1-408-421-00	MICRO INDUCTOR 100UH	
L030	1-408-425-00	MICRO INDUCTOR 220UH	
L031	1-408-409-00	MICRO INDUCTOR 10UH	
L033	1-421-381-00	COIL, FERRITE CHOKE	
L034	1-408-414-00	MICRO INDUCTOR 27UH	
L036	1-408-401-00	MICRO INDUCTOR 2.2UH	
L037	1-408-402-00	MICRO INDUCTOR 2.7UH	
L038	1-407-188-XX	MICRO INDUCTOR 6.8UH	
L301	1-408-411-00	MICRO INDUCTOR 15UH	
L500	1-408-429-00	MICRO INDUCTOR 470UH	
L502	1-459-351-00	COIL (WITH CORE)	
		VARIABLE COIL	
LV001	1-408-512-00	COIL (VARIABLE)	
LV500	1-408-524-00	INDUCTOR, ADJ 1.34MMH	
LV501	1-408-523-00	COIL, VARIABLE 22UH	
		TRANSISTOR	
Q001	8-729-178-54	TRANSISTOR 2SC2785	
Q002	8-729-178-54	TRANSISTOR 2SC2785	
Q003	8-729-178-54	TRANSISTOR 2SC2785	
Q004	8-729-178-54	TRANSISTOR 2SC2785	
Q005	8-729-178-54	TRANSISTOR 2SC2785	
Q006	8-729-178-54	TRANSISTOR 2SC2785	
Q007	8-729-178-54	TRANSISTOR 2SC2785	
Q008	8-729-178-54	TRANSISTOR 2SC2785	
Q009	8-729-178-54	TRANSISTOR 2SC2785	
Q010	8-729-178-54	TRANSISTOR 2SC2785	
Q011	8-729-113-32	TRANSISTOR 2SB733	
Q012	8-729-178-54	TRANSISTOR 2SC2785	
Q013	8-729-117-54	TRANSISTOR 2SA1175	
Q014	8-729-117-54	TRANSISTOR 2SA1175	
Q015	8-729-178-54	TRANSISTOR 2SC2785	
Q016	8-729-178-54	TRANSISTOR 2SC2785	
Q017	8-729-178-54	TRANSISTOR 2SC2785	
Q018	8-729-178-54	TRANSISTOR 2SC2785	
Q019	8-729-178-54	TRANSISTOR 2SC2785	
Q020	8-729-178-54	TRANSISTOR 2SC2785	
Q021	8-729-178-54	TRANSISTOR 2SC2785	
Q022	8-729-178-54	TRANSISTOR 2SC2785	
Q023	8-729-178-54	TRANSISTOR 2SC2785	
Q024	8-729-178-54	TRANSISTOR 2SC2785	
Q025	8-729-178-54	TRANSISTOR 2SC2785	
Q026	8-729-178-54	TRANSISTOR 2SC2785	
Q027	8-729-117-54	TRANSISTOR 2SA1175	
Q500	8-729-178-54	TRANSISTOR 2SC2785	
Q501	8-729-178-54	TRANSISTOR 2SC2785	
Q502	8-729-908-62	TRANSISTOR 2SD786	
Q503	=>8-729-612-77	TRANSISTOR 2SA1027R	
Q504	8-729-178-54	TRANSISTOR 2SC2785	
Q505	8-729-178-54	TRANSISTOR 2SC2785	
Q506	8-729-178-54	TRANSISTOR 2SC2785	
Q507	8-729-178-54	TRANSISTOR 2SC2785	
Q509	8-729-178-54	TRANSISTOR 2SC2785	
Q510	8-729-967-32	TRANSISTOR 2SC2673	
Q512	8-729-178-54	TRANSISTOR 2SC2785	
Q513	8-729-178-54	TRANSISTOR 2SC2785	
Q514	=>8-769-200-30	TRANSISTOR 2SK107-3	
Q515	8-729-334-58	TRANSISTOR 2SC1345	
Q516	8-729-178-54	TRANSISTOR 2SC2785	
Q517	8-729-178-54	TRANSISTOR 2SC2785	
Q518	8-729-178-54	TRANSISTOR 2SC2785	
Q519	8-729-178-54	TRANSISTOR 2SC2785	
Q520	8-729-178-54	TRANSISTOR 2SC2785	
Q521	=>8-769-200-30	TRANSISTOR 2SK107-3	
Q522	8-729-178-54	TRANSISTOR 2SC2785	
Q523	8-729-178-54	TRANSISTOR 2SC2785	
Q524	8-729-178-54	TRANSISTOR 2SC2785	
Q525	8-729-178-54	TRANSISTOR 2SC2785	
Q526	8-729-178-54	TRANSISTOR 2SC2785	
Q529	8-729-178-54	TRANSISTOR 2SC2785	
Q530	8-729-178-54	TRANSISTOR 2SC2785	
Q531	8-729-178-54	TRANSISTOR 2SC2785	
Q532	8-729-178-54	TRANSISTOR 2SC2785	
Q533	8-729-178-54	TRANSISTOR 2SC2785	
Q538	8-729-178-54	TRANSISTOR 2SC2785	
Q539	8-729-178-54	TRANSISTOR 2SC2785	
Q540	8-729-178-54	TRANSISTOR 2SC2785	
Q541	8-729-178-54	TRANSISTOR 2SC2785	
Q542	8-729-988-12	TRANSISTOR 2SA881	
Q543	8-729-178-54	TRANSISTOR 2SC2785	
Q544	8-729-967-32	TRANSISTOR 2SC2673	
Q545	8-729-178-54	TRANSISTOR 2SC2785	
Q546	8-729-178-54	TRANSISTOR 2SC2785	
Q547	8-729-178-54	TRANSISTOR 2SC2785	
		RESISTOR	
R001	1-246-843-00	CARBON 910	1/8W
R002	1-246-848-00	CARBON 2.4K	1/8W
R003	1-246-787-00	CARBON 2.2K	1/8W
R004	1-246-843-00	CARBON 910	1/8W
R006	1-246-780-00	CARBON 560	1/8W

NOTE:

The components identified by shading and mark ⚠ are critical for safety. Replace only with part number specified.

Les composants identifiés par une trame et une marque ⚠ sont critiques pour la sécurité. Ne les remplacer que par une pièce portant le numéro spécifié.

When indicating parts by reference number, please include the board name.

- =>: Due to standardization, interchangeable replacements may be substituted for parts specified in the diagrams.
- Items marked " ♦ " are not stocked since they are seldom required for routine service. Some delay should be anticipated when ordering these items.

- All variable and adjustable resistors have characteristic curve B, unless otherwise noted.

CAPACITORS
- MF : μF, PF : μμF

RESISTORS
- All resistors are in ohms
- F : nonflammable

COILS
- MMH : mH, UH : μH

VA-3 BOARD

Ref.No	Part No	Description			Remark
R007	1-246-807-00	CARBON	100K	1/8W	
R008	1-246-801-00	CARBON	33K	1/8W	
R009	1-246-843-00	CARBON	910	1/8W	
R010	1-246-851-00	CARBON	4.3K	1/8W	
R011	1-246-857-00	CARBON	13K	1/8W	
R012	1-246-808-00	CARBON	120K	1/8W	
R013	1-246-799-00	CARBON	22K	1/8W	
R014	1-246-803-00	CARBON	47K	1/8W	
R015	1-246-795-00	CARBON	10K	1/8W	
R017	1-246-783-00	CARBON	1K	1/8W	
R018	1-246-792-00	CARBON	5.6K	1/8W	
R019	1-246-803-00	CARBON	47K	1/8W	
R020	1-246-809-00	CARBON	150K	1/8W	
R021	1-246-801-00	CARBON	33K	1/8W	
R022	1-246-802-00	CARBON	39K	1/8W	
R023	1-246-786-00	CARBON	1.8K	1/8W	
R024	1-246-802-00	CARBON	39K	1/8W	
R025	1-246-783-00	CARBON	1K	1/8W	
R026	1-246-851-00	CARBON	4.3K	1/8W	
R027	1-246-777-00	CARBON	330	1/8W	
R028	1-246-834-00	CARBON	160	1/8W	
R029	1-246-770-00	CARBON	82	1/8W	
R030	1-246-770-00	CARBON	82	1/8W	
R031	1-246-840-00	CARBON	510	1/8W	
R032	1-246-791-00	CARBON	4.7K	1/8W	
R033	1-246-834-00	CARBON	160	1/8W	
R034	1-246-791-00	CARBON	4.7K	1/8W	
R035	1-246-778-00	CARBON	390	1/8W	
R036	1-246-791-00	CARBON	4.7K	1/8W	
R037	1-246-783-00	CARBON	1K	1/8W	
R038	1-246-803-00	CARBON	47K	1/8W	
R039	1-246-861-00	CARBON	30K	1/8W	
R040	1-246-783-00	CARBON	1K	1/8W	
R041	1-246-844-00	CARBON	1.1K	1/8W	
R042	1-246-844-00	CARBON	1.1K	1/8W	
R043	1-246-792-00	CARBON	5.6K	1/8W	
R044	1-246-783-00	CARBON	1K	1/8W	
R045	1-246-801-00	CARBON	33K	1/8W	
R046	1-246-787-00	CARBON	2.2K	1/8W	
R047	1-246-802-00	CARBON	39K	1/8W	
R048	1-246-799-00	CARBON	22K	1/8W	
R049	1-246-796-00	CARBON	12K	1/8W	
R050	1-246-791-00	CARBON	4.7K	1/8W	
R051	1-246-779-00	CARBON	470	1/8W	
R052	1-246-787-00	CARBON	2.2K	1/8W	
R053	1-246-783-00	CARBON	1K	1/8W	
R054	1-246-795-00	CARBON	10K	1/8W	
R056	1-246-795-00	CARBON	10K	1/8W	
R058	1-246-781-00	CARBON	680	1/8W	
R059	1-246-791-00	CARBON	4.7K	1/8W	
R060	1-246-852-00	CARBON	5.1K	1/8W	
R061	1-246-794-00	CARBON	8.2K	1/8W	
R062	1-246-808-00	CARBON	120K	1/8W	
R065	1-246-459-00	CARBON	270 5%	1/4W	
R066	1-246-785-00	CARBON	1.5K	1/8W	
R067	1-246-787-00	CARBON	2.2K	1/8W	
R068	1-246-769-00	CARBON	68	1/8W	
R069	1-246-461-00	CARBON	330 5%	1/4W	
R070	1-246-769-00	CARBON	68	1/8W	
R071	1-246-782-00	CARBON	820	1/8W	
R072	1-246-796-00	CARBON	12K	1/8W	
R073	1-246-843-00	CARBON	910	1/8W	
R074	1-246-840-00	CARBON	510	1/8W	
R075	1-246-844-00	CARBON	1.1K	1/8W	
R076	1-246-835-00	CARBON	200	1/8W	
R077	1-246-804-00	CARBON	56K	1/8W	
R078	1-246-805-00	CARBON	68K	1/8W	
R079	1-246-791-00	CARBON	4.7K	1/8W	
R080	1-246-799-00	CARBON	22K	1/8W	
R081	1-246-809-00	CARBON	150K	1/8W	
R082	1-246-807-00	CARBON	100K	1/8W	
R083	1-246-787-00	CARBON	2.2K	1/8W	
R084	1-246-783-00	CARBON	1K	1/8W	
R085	1-247-048-00	CARBON	390K	1/8W	
R086	1-247-049-00	CARBON	470K	1/8W	
R087	1-246-796-00	CARBON	12K	1/8W	
R088	1-246-847-00	CARBON	2K	1/8W	
R089	1-246-798-00	CARBON	18K	1/8W	
R090	1-246-863-00	CARBON	43K	1/8W	
R091	1-246-782-00	CARBON	820	1/8W	
R092	1-246-797-00	CARBON	15K	1/8W	
R093	1-246-795-00	CARBON	10K	1/8W	
R094	1-246-844-00	CARBON	1.1K	1/8W	
R095	1-246-783-00	CARBON	1K	1/8W	
R097	1-246-834-00	CARBON	160	1/8W	
R099	1-246-771-00	CARBON	100	1/8W	
R100	1-246-777-00	CARBON	330	1/8W	
R103	1-246-789-00	CARBON	3.3K	1/8W	
R104	1-246-791-00	CARBON	4.7K	1/8W	
R105	1-246-799-00	CARBON	22K	1/8W	
R106	1-246-791-00	CARBON	4.7K	1/8W	
R107	1-246-795-00	CARBON	10K	1/8W	
R108	1-246-794-00	CARBON	8.2K	1/8W	
R109	1-246-799-00	CARBON	22K	1/8W	
R110	1-246-799-00	CARBON	22K	1/8W	
R111	1-246-783-00	CARBON	1K	1/8W	
R112	1-246-783-00	CARBON	1K	1/8W	
R113	1-246-785-00	CARBON	1.5K	1/8W	
R114	1-246-810-00	CARBON	180K	1/8W	
R115	1-246-803-00	CARBON	47K	1/8W	
R116	1-246-803-00	CARBON	47K	1/8W	
R117	1-246-863-00	CARBON	43K	1/8W	
R118	1-246-863-00	CARBON	43K	1/8W	
R119	1-246-795-00	CARBON	10K	1/8W	
R120	1-246-792-00	CARBON	5.6K	1/8W	
R121	1-246-864-00	CARBON	51K	1/8W	

NOTE:

The components identified by shading and mark ⚠ are critical for safety. Replace only with part number specified.

Les composants identifiés par une trame et une marque ⚠ sont critiques pour la sécurité. Ne les remplacer que par une pièce portant le numéro spécifié.

When indicating parts by reference number, please include the board name.

- =>: Due to standardization, interchangeable replacements may be substituted for parts specified in the diagrams.
- Items marked " ♦ " are not stocked since they are seldom required for routine service. Some delay should be anticipated when ordering these items.
- All variable and adjustable resistors have characteristic curve B, unless otherwise noted.

CAPACITORS
- MF : μF, PF : μμF

RESISTORS
- All resistors are in ohms
- F : nonflammable

COILS
- MMH : mH, UH : μH

Ref.No	Part No	Description			Remark
R122	1-246-801-00	CARBON	33K	1/8W	
R123	1-246-804-00	CARBON	56K	1/8W	
R124	1-246-801-00	CARBON	33K	1/8W	
R125	1-246-801-00	CARBON	33K	1/8W	
R126	1-246-857-00	CARBON	13K	1/8W	
R127	1-246-802-00	CARBON	39K	1/8W	
R128	1-246-807-00	CARBON	100K	1/8W	
R129	1-246-842-00	CARBON	750	1/8W	
R130	1-246-789-00	CARBON	3.3K	1/8W	
R131	1-246-855-00	CARBON	9.1K	1/8W	
R132	1-246-785-00	CARBON	1.5K	1/8W	
R133	1-246-854-00	CARBON	7.5K	1/8W	
R134	1-246-847-00	CARBON	2K	1/8W	
R135	1-246-830-00	CARBON	75	1/8W	
R136	1-246-830-00	CARBON	75	1/8W	
R137	1-246-860-00	CARBON	24K	1/8W	
R138	1-246-841-00	CARBON	620	1/8W	
R139	1-246-783-00	CARBON	1K	1/8W	
R140	1-246-802-00	CARBON	39K	1/8W	
R141	1-246-794-00	CARBON	8.2K	1/8W	
R142	1-246-836-00	CARBON	240	1/8W	
R143	1-246-857-00	CARBON	13K	1/8W	
R144	1-246-865-00	CARBON	62K	1/8W	
R145	1-246-802-00	CARBON	39K	1/8W	
R146	1-246-803-00	CARBON	47K	1/8W	
R148	1-246-850-00	CARBON	3.6K	1/8W	
R149	1-246-850-00	CARBON	3.6K	1/8W	
R206	1-246-775-00	CARBON	220	1/8W	
R207	1-246-801-00	CARBON	33K	1/8W	
R208	1-247-052-00	CARBON	820K	1/8W	
R209	1-247-052-00	CARBON	820K	1/8W	
R211	1-246-789-00	CARBON	3.3K	1/8W	
R212	1-246-787-00	CARBON	2.2K	1/8W	
R213	1-246-783-00	CARBON	1K	1/8W	
R214	1-246-793-00	CARBON	6.8K	1/8W	
R215	1-246-785-00	CARBON	1.5K	1/8W	
R216	1-246-791-00	CARBON	4.7K	1/8W	
R217	1-246-783-00	CARBON	1K	1/8W	
R218	1-246-784-00	CARBON	1.2K	1/8W	
R219	1-246-780-00	CARBON	560	1/8W	
R220	1-246-780-00	CARBON	560	1/8W	
R221	1-246-840-00	CARBON	510	1/8W	
R223	1-246-795-00	CARBON	10K	1/8W	
R224	1-246-854-00	CARBON	7.5K	1/8W	
R225	1-246-851-00	CARBON	4.3K	1/8W	
R226	1-246-871-00	CARBON	200K	1/8W	
R227	1-246-869-00	CARBON	130K	1/8W	
R228	1-246-794-00	CARBON	8.2K	1/8W	
R229	1-246-870-00	CARBON	160K	1/8W	
R230	1-246-771-00	CARBON	100	1/8W	
R231	1-246-779-00	CARBON	470	1/8W	
R232	1-246-783-00	CARBON	1K	1/8W	
R233	1-246-783-00	CARBON	1K	1/8W	

Ref.No	Part No	Description			Remark
R234	1-246-803-00	CARBON	47K	1/8W	
R235	1-246-803-00	CARBON	47K	1/8W	
R236	1-246-803-00	CARBON	47K	1/8W	
R237	1-246-801-00	CARBON	33K	1/8W	
R238	1-246-801-00	CARBON	33K	1/8W	
R239	1-246-785-00	CARBON	1.5K	1/8W	
R240	1-246-771-00	CARBON	100	1/8W	
R241	1-246-789-00	CARBON	3.3K	1/8W	
R242	1-246-856-00	CARBON	11K	1/8W	
R243	1-246-802-00	CARBON	39K	1/8W	
R244	1-246-783-00	CARBON	1K	1/8W	
R245	1-246-791-00	CARBON	4.7K	1/8W	
R246	1-246-791-00	CARBON	4.7K	1/8W	
R247	1-246-797-00	CARBON	15K	1/8W	
R248	1-246-858-00	CARBON	16K	1/8W	
R249	1-246-805-00	CARBON	68K	1/8W	
R251	1-246-802-00	CARBON	39K	1/8W	
R252	1-246-807-00	CARBON	100K	1/8W	
R253	1-246-771-00	CARBON	100	1/8W	
R254	1-246-837-00	CARBON	300	1/8W	
R255	1-246-837-00	CARBON	300	1/8W	
R256	1-246-839-00	CARBON	430	1/8W	
R257	1-246-803-00	CARBON	47K	1/8W	
R258	1-246-799-00	CARBON	22K	1/8W	
R259	1-246-799-00	CARBON	22K	1/8W	
R260	1-247-048-00	CARBON	390K	1/8W	
R261	1-246-787-00	CARBON	2.2K	1/8W	
R262	1-246-801-00	CARBON	33K	1/8W	
R263	1-246-801-00	CARBON	33K	1/8W	
R264	1-246-852-00	CARBON	5.1K	1/8W	
R266	1-246-799-00	CARBON	22K	1/8W	
R301	1-246-777-00	CARBON	330	1/8W	
R302	1-246-791-00	CARBON	4.7K	1/8W	
R303	1-246-791-00	CARBON	4.7K	1/8W	
R304	1-246-805-00	CARBON	68K	1/8W	
R305	1-246-794-00	CARBON	8.2K	1/8W	
R306	1-246-799-00	CARBON	22K	1/8W	
R307	1-246-859-00	CARBON	20K	1/8W	
R308	1-246-857-00	CARBON	13K	1/8W	
R310	1-246-787-00	CARBON	2.2K	1/8W	
R311	1-246-844-00	CARBON	1.1K	1/8W	
R312	1-246-783-00	CARBON	1K	1/8W	
R313	1-246-859-00	CARBON	20K	1/8W	
R314	1-246-769-00	CARBON	68	1/8W	
R315	1-246-848-00	CARBON	2.4K	1/8W	
R317	1-246-847-00	CARBON	2K	1/8W	
R318	1-246-771-00	CARBON	100	1/8W	
R320	1-246-851-00	CARBON	4.3K	1/8W	
R321	1-246-801-00	CARBON	33K	1/8W	
R322	1-246-801-00	CARBON	33K	1/8W	
R323	1-246-795-00	CARBON	10K	1/8W	
R324	1-246-801-00	CARBON	33K	1/8W	
R325	1-246-795-00	CARBON	10K	1/8W	

NOTE:

The components identified by shading and mark ⚠ are critical for safety. Replace only with part number specified.

Les composants identifiés par une trame et une marque ⚠ sont critiques pour la sécurité. Ne les remplacer que par une pièce portant le numéro spécifié.

When indicating parts by reference number, please include the board name.

- =>: Due to standardization, interchangeable replacements may be substituted for parts specified in the diagrams.
- Items marked " ♦ " are not stocked since they are seldom required for routine service. Some delay should be anticipated when ordering these items.

- All variable and adjustable resistors have characteristic curve B, unless otherwise noted.

CAPACITORS
- MF : μF, PF : μμF

RESISTORS
- All resistors are in ohms
- F : nonflammable

COILS
- MMH : mH, UH : μH

VA-3 BOARD

Ref.No	Part No	Description			Remark
R326	1-246-789-00	CARBON	3.3K	1/8W	
R500	1-246-759-00	CARBON	10	1/8W	
R501	1-246-803-00	CARBON	47K	1/8W	
R502	1-246-801-00	CARBON	33K	1/8W	
R503	1-246-803-00	CARBON	47K	1/8W	
R504	1-246-801-00	CARBON	33K	1/8W	
R506	1-246-543-00	CARBON	820K 5%	1/4W	
R507	1-246-513-00	CARBON	47K 5%	1/4W	
R508	1-246-800-00	CARBON	27K	1/8W	
R509	1-246-791-00	CARBON	4.7K	1/8W	
R510	1-246-869-00	CARBON	130K	1/8W	
R511	1-246-521-00	CARBON	100K 5%	1/4W	
R512	1-246-768-00	CARBON	56	1/8W	
R513	1-246-797-00	CARBON	15K	1/8W	
R514	1-246-795-00	CARBON	10K	1/8W	
R515	1-246-852-00	CARBON	5.1K	1/8W	
R516	1-246-846-00	CARBON	1.6K	1/8W	
R517	1-246-796-00	CARBON	12K	1/8W	
R518	1-246-799-00	CARBON	22K	1/8W	
R519	1-246-801-00	CARBON	33K	1/8W	
R520	1-246-801-00	CARBON	33K	1/8W	
R521	1-246-796-00	CARBON	12K	1/8W	
R522	1-246-798-00	CARBON	18K	1/8W	
R523	1-246-793-00	CARBON	6.8K	1/8W	
R525	1-246-801-00	CARBON	33K	1/8W	
R526	1-246-771-00	CARBON	100	1/8W	
R527	1-246-795-00	CARBON	10K	1/8W	
R528	1-246-797-00	CARBON	15K	1/8W	
R531 ⚠	1-246-980-00	CARBON	3.3 5%	1/8W F	
R532	1-246-771-00	CARBON	100	1/8W	
R533	1-246-795-00	CARBON	10K	1/8W	
R534	1-246-797-00	CARBON	15K	1/8W	
R535	1-246-804-00	CARBON	56K	1/8W	
R536	1-246-804-00	CARBON	56K	1/8W	
R537	1-246-795-00	CARBON	10K	1/8W	
R538	1-246-807-00	CARBON	100K	1/8W	
R539	1-246-866-00	CARBON	75K	1/8W	
R540	1-246-866-00	CARBON	75K	1/8W	
R541	1-246-807-00	CARBON	100K	1/8W	
R542	1-246-807-00	CARBON	100K	1/8W	
R543	1-246-807-00	CARBON	100K	1/8W	
R544	1-246-783-00	CARBON	1K	1/8W	
R545	1-246-783-00	CARBON	1K	1/8W	
R546	1-246-803-00	CARBON	47K	1/8W	
R547	1-246-803-00	CARBON	47K	1/8W	
R548	1-246-799-00	CARBON	22K	1/8W	
R549	1-246-804-00	CARBON	56K	1/8W	
R550	1-246-795-00	CARBON	10K	1/8W	
R551	1-246-811-00	CARBON	220K	1/8W	
R552	1-246-807-00	CARBON	100K	1/8W	
R553	1-246-834-00	CARBON	160	1/8W	
R554	1-246-795-00	CARBON	10K	1/8W	
R555	1-246-811-00	CARBON	220K	1/8W	

Ref.No	Part No	Description			Remark
R556	1-246-795-00	CARBON	10K	1/8W	
R557	1-246-783-00	CARBON	1K	1/8W	
R558	1-246-803-00	CARBON	47K	1/8W	
R559	1-246-801-00	CARBON	33K	1/8W	
R560	1-246-801-00	CARBON	33K	1/8W	
R561	1-246-791-00	CARBON	4.7K	1/8W	
R562	1-247-047-00	CARBON	330K	1/8W	
R563	1-246-799-00	CARBON	22K	1/8W	
R564	1-246-792-00	CARBON	5.6K	1/8W	
R565	1-202-469-00	COMPOSITION	3.9M 5%	1/4W	
R566	1-246-795-00	CARBON	10K	1/8W	
R567	1-246-771-00	CARBON	100	1/8W	
R568	1-246-799-00	CARBON	22K	1/8W	
R569	1-246-799-00	CARBON	22K	1/8W	
R570	1-246-792-00	CARBON	5.6K	1/8W	
R571	1-246-795-00	CARBON	10K	1/8W	
R572	1-246-795-00	CARBON	10K	1/8W	
R573	1-246-795-00	CARBON	10K	1/8W	
R574	1-246-867-00	CARBON	91K	1/8W	
R575	1-246-793-00	CARBON	6.8K	1/8W	
R577	1-246-793-00	CARBON	6.8K	1/8W	
R578	1-247-049-00	CARBON	470K	1/8W	
R579	1-246-787-00	CARBON	2.2K	1/8W	
R581	1-246-789-00	CARBON	3.3K	1/8W	
R584	1-246-788-00	CARBON	2.7K	1/8W	
R585	1-246-852-00	CARBON	5.1K	1/8W	
R586	1-246-843-00	CARBON	910	1/8W	
R592	1-246-795-00	CARBON	10K	1/8W	
R593	1-246-795-00	CARBON	10K	1/8W	
R594	1-246-796-00	CARBON	12K	1/8W	
R595	1-246-793-00	CARBON	6.8K	1/8W	
R596	1-246-805-00	CARBON	68K	1/8W	
R597	1-246-797-00	CARBON	15K	1/8W	
R598	1-246-796-00	CARBON	12K	1/8W	
R599	1-246-861-00	CARBON	30K	1/8W	
R600	1-246-860-00	CARBON	24K	1/8W	
R601	1-246-792-00	CARBON	5.6K	1/8W	
R602	1-246-791-00	CARBON	4.7K	1/8W	
R603	1-246-780-00	CARBON	560	1/8W	
R604	1-246-786-00	CARBON	1.8K	1/8W	
R605	1-246-799-00	CARBON	22K	1/8W	
R606	1-246-801-00	CARBON	33K	1/8W	
R607	1-246-771-00	CARBON	100	1/8W	
R608	1-246-783-00	CARBON	1K	1/8W	
R610	1-246-793-00	CARBON	6.8K	1/8W	
R611	1-247-047-00	CARBON	330K	1/8W	
R612	1-246-795-00	CARBON	10K	1/8W	
R613	1-246-791-00	CARBON	4.7K	1/8W	
R614	1-246-801-00	CARBON	33K	1/8W	
R615	1-246-793-00	CARBON	6.8K	1/8W	
R616	1-246-797-00	CARBON	15K	1/8W	
R617	1-246-787-00	CARBON	2.2K	1/8W	
R618	1-246-811-00	CARBON	220K	1/8W	

NOTE:

The components identified by shading and mark ⚠ are critical for safety. Replace only with part number specified.

Les composants identifiés par une trame et une marque ⚠ sont critiques pour la sécurité. Ne les remplacer que par une pièce portant le numéro spécifié.

When indicating parts by reference number, please include the board name.

- =>: Due to standardization, interchangeable replacements may be substituted for parts specified in the diagrams.
- Items marked " ♦ " are not stocked since they are seldom required for routine service. Some delay should be anticipated when ordering these items.
- All variable and adjustable resistors have characteristic curve B, unless otherwise noted.

CAPACITORS
- MF : μF, PF : μμF

RESISTORS
- All resistors are in ohms
- F : nonflammable

COILS
- MMH : mH, UH : μH

Ref.No	Part No	Description			Remark
R619	1-246-807-00	CARBON	100K	1/8W	
R620	1-246-811-00	CARBON	220K	1/8W	
R621	1-246-807-00	CARBON	100K	1/8W	
R622	1-246-807-00	CARBON	100K	1/8W	
R623	1-246-811-00	CARBON	220K	1/8W	
R624	1-246-807-00	CARBON	100K	1/8W	
R625	1-246-787-00	CARBON	2.2K	1/8W	
R626	1-246-797-00	CARBON	15K	1/8W	
R627	1-246-783-00	CARBON	1K	1/8W	
R628	1-246-783-00	CARBON	1K	1/8W	
R629	1-246-783-00	CARBON	1K	1/8W	
R630	1-246-791-00	CARBON	4.7K	1/8W	
R631	1-246-784-00	CARBON	1.2K	1/8W	
R632	1-246-796-00	CARBON	12K	1/8W	
R633	1-246-791-00	CARBON	4.7K	1/8W	
R634	1-246-801-00	CARBON	33K	1/8W	
R635	1-246-799-00	CARBON	22K	1/8W	
R636	1-246-807-00	CARBON	100K	1/8W	
R638	1-246-780-00	CARBON	560	1/8W	
R639	1-246-829-00	CARBON	62	1/8W	
R640	1-246-783-00	CARBON	1K	1/8W	
R641	1-246-792-00	CARBON	5.6K	1/8W	
R642	1-246-797-00	CARBON	15K	1/8W	
R643	1-246-791-00	CARBON	4.7K	1/8W	
R647	1-246-801-00	CARBON	33K	1/8W	
R648	1-246-801-00	CARBON	33K	1/8W	
R649	1-247-053-00	CARBON	1M	1/8W	
R650	1-246-783-00	CARBON	1K	1/8W	
R651	1-246-787-00	CARBON	2.2K	1/8W	
R652	1-246-787-00	CARBON	2.2K	1/8W	
R653	1-246-801-00	CARBON	33K	1/8W	
R654	1-246-807-00	CARBON	100K	1/8W	
R655	1-246-783-00	CARBON	1K	1/8W	

VARIABLE RESISTOR

RV001	1-224-249-XX	RES, ADJ, SOLID	1K
RV003	1-224-250-XX	RES, ADJ, SOLID	2.2K
RV004	1-224-251-XX	RES, ADJ, SOLID	4.7K
RV005	1-224-250-XX	RES, ADJ, SOLID	2.2K
RV006	1-224-249-XX	RES, ADJ, SOLID	1K
RV007	1-224-249-XX	RES, ADJ, SOLID	1K
RV008	1-224-250-XX	RES, ADJ, SOLID	2.2K
RV009	1-224-251-XX	RES, ADJ, SOLID	4.7K
RV010	1-224-251-XX	RES, ADJ, SOLID	4.7K
RV011	1-224-251-XX	RES, ADJ, SOLID	4.7K
RV012	1-224-251-XX	RES, ADJ, SOLID	4.7K
RV013	1-224-252-XX	RES, ADJ, SOLID	10K
RV014	1-224-252-XX	RES, ADJ, SOLID	10K
RV015	1-224-250-XX	RES, ADJ, SOLID	2.2K
RV016	1-224-251-XX	RES, ADJ, SOLID	4.7K
RV017	1-224-248-XX	RES, ADJ, SOLID	470
RV019	1-224-254-XX	RES, ADJ, SOLID	47K
RV020	1-224-254-XX	RES, ADJ, SOLID	47K

Ref.No	Part No	Description	Remark
RV021	1-224-250-XX	RES, ADJ, SOLID 2.2K	
RV022	1-224-251-XX	RES, ADJ, SOLID 4.7K	
RV025	1-224-252-XX	RES, ADJ, SOLID 10K	
RV026	1-224-254-XX	RES, ADJ, SOLID 47K	
RV027	1-224-248-XX	RES, ADJ, SOLID 470	
RV028	1-224-248-XX	RES, ADJ, SOLID 470	
RV029	1-224-250-XX	RES, ADJ, SOLID 2.2K	
RV030	1-224-251-XX	RES, ADJ, SOLID 4.7K	
RV500	1-224-254-XX	RES, ADJ, SOLID 47K	
RV501	1-224-255-XX	RES, ADJ, SOLID 100K	
RV502	1-224-251-XX	RES, ADJ, SOLID 4.7K	

RELAY

RY501	1-515-418-00	RELAY
RY502	1-515-416-00	RELAY

SWITCH

SW001	1-552-821-00	SWITCH, SLIDE

TRANSFORMER

T001	1-235-057-00	FILTER, BAND PASS
T002	1-426-065-00	COIL, BPF-1
T003	1-426-070-00	COIL (EQT)
T004	1-409-352-00	COIL, TRAP
T005	1-409-353-00	COIL, TRAP
T006	1-231-412-00	FILTER BLOCK
T007	1-426-089-00	COIL (EQT)
T500	1-433-236-00	TRANSFORMER, OSCILLATOR

CONNECTOR

VCND13	1-507-742-00	JACK, PIN 2P

CRYSTAL

X001	1-527-396-00	CRYSTAL, OSC

****

♦:1-606-272-00 MI-2 BOARD
****

CONNECTOR

CN501	1-507-285-00	JACK

****

♦:A-6711-323-A VL-3 BOARD, COMPLETE
****

	1-246-795-00	CARBON	10K	1/8W
	1-246-795-00	CARBON	10K	1/8W

CAPACITOR

C001	1-123-306-00	ELECT	47MF	20%	10V

NOTE:

The components identified by shading and mark ⚠ are critical for safety. Replace only with part number specified.

Les composants identifiés par une trame et une marque ⚠ sont critiques pour la sécurité. Ne les remplacer que par une pièce portant le numéro spécifié.

When indicating parts by reference number, please include the board name.

- =>: Due to standardization, interchangeable replacements may be substituted for parts specified in the diagrams.
- Items marked " ♦ " are not stocked since they are seldom required for routine service. Some delay should be anticipated when ordering these items.
- All variable and adjustable resistors have characteristic curve B, unless otherwise noted.

CAPACITORS
- MF : μF, PF : μμF

RESISTORS
- All resistors are in ohms
- F : nonflammable

COILS
- MMH : mH, UH : μH

VL-3 BOARD

Ref.No	Part No	Description			Remark
C002	1-123-616-00	ELECT	4.7MF	20%	25V
C003	1-123-617-00	ELECT	10MF	20%	16V
C004	1-130-022-00	FILM	0.0022MF	5%	50V
C005	1-161-013-00	CERAMIC	0.01MF	10%	25V
C006	1-123-617-00	ELECT	10MF	20%	16V
C007	1-130-532-51	MYLAR	0.22MF	10%	50V
C008	1-123-617-00	ELECT	10MF	20%	16V
C009	1-123-617-00	ELECT	10MF	20%	16V
C010	1-102-074-00	CERAMIC	0.001MF	10%	50V
C011	1-131-404-00	ELECT(SOLID)	0.22MF	10%	25V
C012	1-102-126-00	CERAMIC	0.0056MF	10%	50V
C013	1-123-616-00	ELECT	4.7MF	20%	25V
C014	1-161-013-00	CERAMIC	0.01MF	10%	25V
C015	1-123-306-00	ELECT	47MF	20%	10V
C016	1-123-645-00	ELECT	33MF	20%	10V
C017	1-123-617-00	ELECT	10MF	20%	16V
C018	1-123-617-00	ELECT	10MF	20%	16V
C019	1-123-617-00	ELECT	10MF	20%	16V
C020	1-123-617-00	ELECT	10MF	20%	16V
C021	1-102-118-00	CERAMIC	0.0012MF	10%	50V
C022	1-123-617-00	ELECT	10MF	20%	16V
C023	1-123-617-00	ELECT	10MF	20%	16V
C024	1-131-404-00	ELECT(SOLID)	0.22MF	10%	25V
C025	1-130-029-00	FILM	0.0082MF	5%	50V
C026	1-130-025-00	FILM	0.0039MF	5%	50V
C027	1-123-622-00	ELECT	22MF	20%	16V
C028	1-123-306-00	ELECT	47MF	20%	10V
C029	1-161-013-00	CERAMIC	0.01MF	10%	25V
C030	1-131-342-00	ELECT(SOLID)	0.15MF	10%	25V
C031	1-161-013-00	CERAMIC	0.01MF	10%	25V
C032	1-123-307-00	ELECT	100MF	20%	10V
C033	1-130-028-00	FILM	0.0068MF	5%	50V
C034	1-130-025-00	FILM	0.0039MF	5%	50V
C035	1-130-481-00	MYLAR	0.0068MF	5%	50V
C036	1-131-342-00	ELECT(SOLID)	0.15MF	10%	25V
C037	1-123-306-00	ELECT	47MF	20%	10V
C038	1-130-524-51	MYLAR	0.047MF	10%	50V
C040	1-123-306-00	ELECT	47MF	20%	10V
C041	1-123-613-00	ELECT	3.3MF	20%	50V
C042	1-161-034-00	CERAMIC	0.022MF	20%	25V
C043	1-102-121-00	CERAMIC	0.0022MF	10%	50V
C044	1-123-617-00	ELECT	10MF	20%	16V
C045	1-131-345-00	ELECT(SOLID)	0.47MF	10%	25V
C046	1-131-345-00	ELECT(SOLID)	0.47MF	10%	25V
C047	1-123-617-00	ELECT	10MF	20%	16V
C048	1-130-524-51	MYLAR	0.047MF	10%	50V
C049	1-131-407-00	ELECT(SOLID)	0.68MF	10%	25V
C050	1-102-074-00	CERAMIC	0.001MF	10%	50V
C051	1-123-617-00	ELECT	10MF	20%	16V

CONNECTOR

CN001♦	1-560-472-00	PIN, CONNECTOR 12P	
CN002♦	1-560-472-00	PIN, CONNECTOR 12P	
CN003♦	1-560-470-00	PIN, CONNECTOR 8P	
CN004♦	1-560-466-00	PIN, CONNECTOR 3P	

COMPOSITION CIRCUIT BLOCK

CP002	1-231-810-00	COMPOSITION CIRCUIT BLOCK	
CP003	1-231-628-00	COMPOSITION CIRCUIT BLOCK	
CP004	1-231-628-00	COMPOSITION CIRCUIT BLOCK	
CP005	1-231-796-21	COMPOSITION CIRCUIT BLOCK	
CP006	1-231-628-00	COMPOSITION CIRCUIT BLOCK	
CP007	1-231-628-00	COMPOSITION CIRCUIT BLOCK	
CP008	1-232-131-00	COMPOSITION CIRCUIT BLOCK	
CP009	1-232-133-00	COMPOSITION CIRCUIT BLOCK	
CP010	1-231-628-00	COMPOSITION CIRCUIT BLOCK	
CP011	1-232-173-00	COMPOSITION CIRCUIT BLOCK	
CP012	1-232-174-00	COMPOSITION CIRCUIT BLOCK	
CP013	1-232-175-00	COMPOSITION CIRCUIT BLOCK	
CP014	1-231-773-00	COMPOSITION CIRCUIT BLOCK	
CP015	1-231-886-00	COMPOSITION CIRCUIT BLOCK	
CP016	1-231-628-00	COMPOSITION CIRCUIT BLOCK	
CP017	1-232-176-00	COMPOSITION CIRCUIT BLOCK	
CP018	1-232-177-00	COMPOSITION CIRCUIT BLOCK	
CP019	1-232-178-00	COMPOSITION CIRCUIT BLOCK	
CP020	1-232-175-00	COMPOSITION CIRCUIT BLOCK	

DIODE

D003	=>8-719-911-19	DIODE 1SS119
D004	=>8-719-911-19	DIODE 1SS119
D005	=>8-719-911-19	DIODE 1SS119
D006	=>8-719-911-19	DIODE 1SS119
D007	=>8-719-911-19	DIODE 1SS119
D009	=>8-719-911-19	DIODE 1SS119
D010	=>8-719-911-19	DIODE 1SS119
D013	=>8-719-911-19	DIODE 1SS119
D014	=>8-719-911-19	DIODE 1SS119
D015	=>8-719-911-19	DIODE 1SS119

IC

IC001	8-759-132-40	IC UPC324C
IC002	8-759-132-40	IC UPC324C
IC003	8-759-132-40	IC UPC324C
IC004	8-759-240-30	IC TC4030BP
IC005	8-741-104-10	IC 8X-1041
IC006	8-759-240-66	IC TC4066BP
IC007	8-759-240-13	IC TC4013BP
IC008	8-759-240-81	IC TC4081BP
IC009	=>8-759-345-38	IC HD14538BP
IC010	8-759-240-11	IC TC4011BP
IC011	8-759-240-11	IC TC4011BP
IC012	8-759-240-81	IC TC4081BP
IC013	8-759-240-11	IC TC4011BP
IC014	8-759-240-69	IC TC4069UBP

NOTE:

The components identified by shading and mark ⚠ are critical for safety. Replace only with part number specified.

Les composants identifiés par une trame et une marque ⚠ sont critiques pour la sécurité. Ne les remplacer que par une pièce portant le numéro spécifié.

When indicating parts by reference number, please include the board name.

- =>: Due to standardization, interchangeable replacements may be substituted for parts specified in the diagrams.
- Items marked " ♦ " are not stocked since they are seldom required for routine service. Some delay should be anticipated when ordering these items.
- All variable and adjustable resistors have characteristic curve B, unless otherwise noted.

CAPACITORS
- MF : μF, PF : μμF

RESISTORS
- All resistors are in ohms
- F : nonflammable

COILS
- MMH : mH, UH : μH

Ref.No	Part No	Description	Remark
		TRANSISTOR	
Q001	8-729-993-72	TRANSISTOR 2SA937	
Q002	8-729-178-54	TRANSISTOR 2SC2785	
Q003	8-729-178-54	TRANSISTOR 2SC2785	
Q004	8-729-178-54	TRANSISTOR 2SC2785	
Q005	8-729-117-54	TRANSISTOR 2SA1175	
Q006	8-729-178-54	TRANSISTOR 2SC2785	
Q007	8-729-993-72	TRANSISTOR 2SA937	
Q008	8-729-178-54	TRANSISTOR 2SC2785	
Q009	8-729-178-54	TRANSISTOR 2SC2785	
Q010	8-729-117-54	TRANSISTOR 2SA1175	
Q012	8-729-178-54	TRANSISTOR 2SC2785	
Q013	8-729-178-54	TRANSISTOR 2SC2785	
Q014	8-729-117-54	TRANSISTOR 2SA1175	
Q015	8-729-117-54	TRANSISTOR 2SA1175	
Q016	8-729-178-54	TRANSISTOR 2SC2785	
Q017	8-729-178-54	TRANSISTOR 2SC2785	
Q018	8-729-902-11	TRANSISTOR 2SC2021	
Q019	8-729-178-54	TRANSISTOR 2SC2785	
Q020	8-729-178-54	TRANSISTOR 2SC2785	
Q021	8-729-178-54	TRANSISTOR 2SC2785	
Q022	8-729-117-54	TRANSISTOR 2SA1175	
Q023	8-729-117-54	TRANSISTOR 2SA1175	
Q024	8-729-178-54	TRANSISTOR 2SC2785	
Q025	8-729-178-54	TRANSISTOR 2SC2785	
Q026	8-729-117-54	TRANSISTOR 2SA1175	
Q027	8-729-117-54	TRANSISTOR 2SA1175	
Q028	8-729-117-54	TRANSISTOR 2SA1175	
Q029	8-729-117-54	TRANSISTOR 2SA1175	
Q030	=>8-729-902-11	TRANSISTOR 2SC2021	
Q031	8-729-117-54	TRANSISTOR 2SA1175	
Q032	8-729-902-11	TRANSISTOR 2SC2021	
Q033	8-729-117-54	TRANSISTOR 2SA1175	
Q034	8-729-117-54	TRANSISTOR 2SA1175	
Q035	8-729-117-54	TRANSISTOR 2SA1175	
Q036	8-729-117-54	TRANSISTOR 2SA1175	
Q037	8-729-178-54	TRANSISTOR 2SC2785	
		RESISTOR	
R001	1-246-803-00	CARBON 47K 1/8W	
R002	1-246-803-00	CARBON 47K 1/8W	
R003	1-214-154-00	METAL 8.2K 1% 1/4W	
R004	1-214-156-00	METAL 10K 1% 1/4W	
R005	1-246-791-00	CARBON 4.7K 1/8W	
R006	1-247-053-00	CARBON 1M 1/8W	
R011	1-246-791-00	CARBON 4.7K 1/8W	
R012	1-247-053-00	CARBON 1M 1/8W	
R013	1-246-792-00	CARBON 5.6K 1/8W	
R014	1-246-799-00	CARBON 22K 1/8W	
R015	1-246-803-00	CARBON 47K 1/8W	
R016	1-246-807-00	CARBON 100K 1/8W	
R017	1-246-852-00	CARBON 5.1K 1/8W	

Ref.No	Part No	Description	Remark
R020	1-246-846-00	CARBON 1.6K 1/8W	
R021	1-246-851-00	CARBON 4.3K 1/8W	
R022	1-246-807-00	CARBON 100K 1/8W	
R023	1-246-864-00	CARBON 51K 1/8W	
R024	1-246-807-00	CARBON 100K 1/8W	
R025	1-246-807-00	CARBON 100K 1/8W	
R026	1-246-795-00	CARBON 10K 1/4W	
R032	1-246-781-00	CARBON 680 1/8W	
R033	1-246-807-00	CARBON 100K 1/8W	
R037	1-246-807-00	CARBON 100K 1/8W	
R038	1-214-140-00	METAL 2.2K 1% 1/4W	
R039	1-214-156-00	METAL 10K 1% 1/4W	
R040	1-214-168-00	METAL 33K 1% 1/4W	
R041	1-246-803-00	CARBON 47K 1/8W	
R043	1-247-053-00	CARBON 1M 1/8W	
R044	1-247-053-00	CARBON 1M 1/8W	
R045	1-246-765-00	CARBON 33 1/8W	
R047	1-246-807-00	CARBON 100K 1/8W	
R048	1-246-844-00	CARBON 1.1K 1/8W	
R049	1-246-846-00	CARBON 1.6K 1/8W	
R050	1-246-846-00	CARBON 1.6K 1/8W	
R052	1-246-791-00	CARBON 4.7K 1/8W	
R053	1-246-801-00	CARBON 33K 1/8W	
R055	1-247-053-00	CARBON 1M 1/8W	
R058	1-246-792-00	CARBON 5.6K 1/8W	
R061	1-246-848-00	CARBON 2.4K 1/8W	
R062	1-246-803-00	CARBON 47K 1/8W	
R063	1-246-783-00	CARBON 1K 1/8W	
R064	1-246-783-00	CARBON 1K 1/8W	
R065	1-246-783-00	CARBON 1K 1/8W	
R066	1-246-804-00	CARBON 56K 1/8W	
R067	1-246-804-00	CARBON 56K 1/8W	
R068	1-246-807-00	CARBON 100K 1/8W	
R069	1-246-803-00	CARBON 47K 1/8W	
R070	1-246-850-00	CARBON 3.6K 1/8W	
R071	1-246-805-00	CARBON 68K 1/8W	
R072	1-246-804-00	CARBON 56K 1/8W	
R073	1-246-804-00	CARBON 56K 1/8W	
R074	1-246-803-00	CARBON 47K 1/8W	
R075	1-246-795-00	CARBON 10K 1/8W	
R076	1-246-795-00	CARBON 10K 1/8W	
R077	1-246-807-00	CARBON 100K 1/8W	
R078	1-246-807-00	CARBON 100K 1/8W	
R080	1-246-803-00	CARBON 47K 1/8W	
R084	1-246-791-00	CARBON 4.7K 1/8W	
R085	1-246-807-00	CARBON 100K 1/8W	
R086	1-214-780-00	METAL 130K 1% 1/4W	
R087	1-214-786-00	METAL 240K 1% 1/4W	
R088	1-246-775-00	CARBON 220 1/8W	
R089	1-246-805-00	CARBON 68K 1/8W	
R090	1-246-803-00	CARBON 47K 1/8W	
R091	1-246-803-00	CARBON 47K 1/8W	
R092	1-247-053-00	CARBON 1M 1/8W	

NOTE:

The components identified by shading and mark ⚠ are critical for safety. Replace only with part number specified.

Les composants identifiés par une trame et une marque ⚠ sont critiques pour la sécurité. Ne les remplacer que par une pièce portant le numéro spécifié.

When indicating parts by reference number, please include the board name.

- =>: Due to standardization, interchangeable replacements may be substituted for parts specified in the diagrams.
- Items marked " ♦ " are not stocked since they are seldom required for routine service. Some delay should be anticipated when ordering these items.
- All variable and adjustable resistors have characteristic curve B, unless otherwise noted.

CAPACITORS
- MF : μF, PF : μμF

RESISTORS
- All resistors are in ohms
- F : nonflammable

COILS
- MMH : mH, UH : μH

VL-3 BOARD | SS-10A BOARD

Ref.No	Part No	Description				Remark
R093	1-246-777-00	CARBON	330		1/8W	
R094	1-246-803-00	CARBON	47K		1/8W	
R095	1-246-803-00	CARBON	47K		1/8W	
R096	1-246-807-00	CARBON	100K		1/8W	
R097	1-246-807-00	CARBON	100K		1/8W	
R100	1-246-771-00	CARBON	100		1/8W	
R101	1-246-795-00	CARBON	10K		1/8W	
R102	1-246-783-00	CARBON	1K		1/8W	
R103	1-246-795-00	CARBON	10K		1/8W	
R104	1-246-795-00	CARBON	10K		1/8W	
R105	1-246-803-00	CARBON	47K		1/8W	
R106	1-214-174-00	METAL	56K	1%	1/4W	
R107	1-214-178-00	METAL	82K	1%	1/4W	
R108	1-214-150-00	METAL	5.6K	1%	1/4W	
R109	1-246-783-00	CARBON	1K		1/8W	
R110	1-246-807-00	CARBON	100K		1/8W	
R111	1-246-799-00	CARBON	22K		1/8W	
R112	1-246-807-00	CARBON	100K		1/8W	
R113	1-214-163-00	METAL	20K	1%	1/4W	
R114	1-214-167-00	METAL	30K	1%	1/4W	
R115	1-246-790-00	CARBON	3.9K		1/8W	
R116	1-246-807-00	CARBON	100K		1/8W	
R117	1-214-142-00	METAL	2.7K	1%	1/4W	
R118	1-214-132-00	METAL	1K	1%	1/4W	
R121	1-246-803-00	CARBON	47K		1/8W	
R122	1-246-803-00	CARBON	47K		1/8W	
R123	1-246-802-00	CARBON	39K		1/8W	
R124	1-246-795-00	CARBON	10K		1/8W	
R125	1-246-857-00	CARBON	13K		1/8W	
R126	1-246-801-00	CARBON	33K		1/8W	
R127	1-246-803-00	CARBON	47K		1/8W	
R128	1-246-783-00	CARBON	1K		1/8W	
R129	1-246-861-00	CARBON	30K		1/8W	
R130	1-246-857-00	CARBON	13K		1/8W	
R131	1-214-156-00	METAL	10K	1%	1/4W	
R132	1-246-803-00	CARBON	47K		1/8W	
R133	1-246-851-00	CARBON	4.3K		1/8W	
R134	1-246-795-00	CARBON	10K		1/8W	
R135	1-246-803-00	CARBON	47K		1/8W	
R136	1-246-803-00	CARBON	47K		1/8W	
R137	1-246-778-00	CARBON	390		1/8W	
R138	1-246-807-00	CARBON	100K		1/8W	
R139	1-214-145-00	METAL	3.6K	1%	1/4W	
R140	1-246-807-00	CARBON	100K		1/8W	
R141	1-246-807-00	CARBON	100K		1/8W	
R142	1-214-134-00	METAL	1.2K	1%	1/4W	
R146	1-246-807-00	CARBON	100K		1/8W	
R147	1-246-807-00	CARBON	100K		1/8W	
R148	1-214-158-00	METAL	12K	1%	1/4W	
R149	1-214-153-00	METAL	7.5K	1%	1/4W	
R154	1-246-783-00	CARBON	1K		1/8W	
R156	1-246-869-00	CARBON	130K		1/8W	
R157	1-246-807-00	CARBON	100K		1/8W	
R158	1-246-783-00	CARBON	1K		1/8W	
R159	1-246-807-00	CARBON	100K		1/8W	
R160	1-246-807-00	CARBON	100K		1/8W	
R161	1-246-850-00	CARBON	3.6K		1/8W	
R162	1-214-152-00	METAL	6.8K	1%	1/4W	
R164	1-246-791-00	CARBON	4.7K		1/8W	
R171	1-246-807-00	CARBON	100K		1/8W	

VARIABLE RESISTOR

RV001	1-224-252-XX	RES, ADJ, METAL GLAZE	10K
RV002	1-226-773-00	RES, ADJ, METAL GLAZE	22K
RV003	1-224-251-XX	RES, ADJ, METAL GLAZE	4.7K
RV004	1-224-253-XX	RES, ADJ, METAL GLAZE	22K
RV005	1-224-253-XX	RES, ADJ, METAL GLAZE	22K
RV006	1-224-256-XX	RES, ADJ, METAL GLAZE	220K
RV007	1-224-256-XX	RES, ADJ, METAL GLAZE	220K
RV008	1-224-256-XX	RES, ADJ, METAL GLAZE	220K
RV009	1-224-256-XX	RES, ADJ, METAL GLAZE	220K
RV010	1-226-703-00	RES, ADJ, METAL GLAZE	10K
RV011	1-226-775-00	RES, ADJ, METAL GLAZE	100K
RV012	1-224-256-XX	RES, ADJ, METAL GLAZE	220K
RV013	1-224-256-XX	RES, ADJ, METAL GLAZE	220K
RV014	1-228-270-00	RES, VAR, CARBON	10K
RV015	1-226-775-00	RES, ADJ, METAL GLAZE	100K
RV016	1-224-250-XX	RES, ADJ, METAL GLAZE	2.2K
RV017	1-224-255-XX	RES, ADJ, METAL GLAZE	100K
RV018	1-226-773-00	RES, ADJ, METAL GLAZE	22K

****

♦:A-6715-131-A SS-10A BOARD, COMPLETE

****

3-572-085-00 WASHER, FIBER
♦:3-655-214-00 CLIP, CABLE
♦:3-671-839-00 CASE (MAIN), SHIELD, SS-10
3-703-044-26 LABEL, CAUTION

CAPACITOR

C001	1-123-318-00	ELECT	33MF	20%	16V
C002	1-161-057-00	CERAMIC	0.033MF	10%	50V
C003	1-123-617-00	ELECT	10MF	20%	16V
C004	1-123-617-00	ELECT	10MF	20%	16V
C005	1-161-039-00	CERAMIC	0.001MF	10%	25V
C006	1-123-333-00	ELECT	100MF	20%	16V
C007	1-123-318-00	ELECT	33MF	20%	16V
C008	1-161-057-00	CERAMIC	0.033MF	10%	50V
C009	1-130-482-00	MYLAR	0.0082MF	5%	50V
C010	1-130-482-00	MYLAR	0.0082MF	5%	50V
C011	1-123-612-00	ELECT	2.2MF	20%	50V
C012	1-123-612-00	ELECT	2.2MF	20%	50V
C013	1-123-611-00	ELECT	1MF	20%	50V
C014	1-123-611-00	ELECT	1MF	20%	50V
C015	1-123-611-00	ELECT	1MF	20%	50V

NOTE:

The components identified by shading and mark ⚠ are critical for safety. Replace only with part number specified.

Les composants identifiés par une trame et une marque ⚠ sont critiques pour la sécurité. Ne les remplacer que par une pièce portant le numéro spécifié.

When indicating parts by reference number, please include the board name.

- =>: Due to standardization, interchangeable replacements may be substituted for parts specified in the diagrams.
- Items marked " ♦ " are not stocked since they are seldom required for routine service. Some delay should be anticipated when ordering these items.
- All variable and adjustable resistors have characteristic curve B, unless otherwise noted.

CAPACITORS
- MF : μF, PF : μμF

RESISTORS
- All resistors are in ohms
- F : nonflammable

COILS
- MMH : mH, UH : μH

Ref.No	Part No	Description			Remark
C016	1-123-611-00	ELECT	1MF	20%	50V
C017	1-123-617-00	ELECT	10MF	20%	16V
C018	1-123-318-00	ELECT	33MF	20%	16V
C019	1-161-057-00	CERAMIC	0.033MF	10%	50V
C020	1-123-318-00	ELECT	33MF	20%	16V
C021	1-161-057-00	CERAMIC	0.033MF	10%	50V
C022	1-123-611-00	ELECT	1MF	20%	50V
C023	1-123-611-00	ELECT	1MF	20%	50V
C024	1-161-009-00	CERAMIC	0.0047MF	10%	25V
C026	1-161-039-00	CERAMIC	0.001MF	10%	25V
C028	1-123-611-00	ELECT	1MF	20%	50V
C029	1-123-613-00	ELECT	3.3MF	20%	50V
C030	1-123-318-00	ELECT	33MF	20%	16V
C031	1-161-057-00	CERAMIC	0.033MF	10%	50V
C032	1-161-057-00	CERAMIC	0.033MF	10%	50V
C033	1-123-318-00	ELECT	33MF	20%	16V
C034	1-161-057-00	CERAMIC	0.033MF	10%	50V
C035	1-161-021-00	CERAMIC	0.047MF	10%	25V
C036	1-161-021-00	CERAMIC	0.047MF	10%	25V
C037	1-161-005-00	CERAMIC	0.0022MF	10%	25V
C038	1-123-616-00	ELECT	4.7MF	20%	25V
C039	1-161-057-00	CERAMIC	0.033MF	10%	50V
C040	1-161-057-00	CERAMIC	0.033MF	10%	50V
C041	1-123-611-00	ELECT	1MF	20%	50V
C042	1-161-772-11	CERAMIC	0.1MF	10%	25V
C043	1-161-025-00	CERAMIC	0.1MF	10%	25V
C044	1-161-005-00	CERAMIC	0.0022MF	10%	25V
C045	1-161-005-00	CERAMIC	0.0022MF	10%	25V
C301	1-161-021-00	CERAMIC	0.047MF	10%	25V
C302	1-130-491-51	MYLAR	0.047MF	5%	50V
C303	1-130-491-51	MYLAR	0.047MF	5%	50V
C304	1-123-613-00	ELECT	3.3MF	20%	50V
C305	1-123-613-00	ELECT	3.3MF	20%	50V
C306	1-123-613-00	ELECT	3.3MF	20%	50V
C307	1-130-483-51	MYLAR	0.01MF	5%	50V
C308	1-161-013-00	CERAMIC	0.01MF	10%	25V
C309	1-130-483-51	MYLAR	0.01MF	5%	50V
C310	1-123-296-00	ELECT	220MF	20%	6.3V
C311	1-161-021-00	CERAMIC	0.047MF	10%	25V
C312	1-161-017-00	CERAMIC	0.022MF	10%	25V
C317	1-123-611-00	ELECT	1MF	20%	50V
C318	1-123-618-00	ELECT	22MF	20%	6.3V
C319	1-123-333-00	ELECT	100MF	20%	16V
C321	1-123-318-00	ELECT	33MF	20%	16V
C322	1-123-318-00	ELECT	33MF	20%	16V
C323	1-161-021-00	CERAMIC	0.047MF	10%	25V
C325	1-130-483-51	MYLAR	0.01MF	5%	50V
C326	1-123-306-00	ELECT	47MF	20%	10V
C327	1-123-612-00	ELECT	2.2MF	20%	50V
C328	1-131-404-00	ELECT(SOLID)	0.22MF	10%	25V
C330	1-123-617-00	ELECT	10MF	20%	16V
C331	1-161-017-00	CERAMIC	0.022MF	10%	25V
C332	1-161-016-00	CERAMIC	0.018MF	10%	25V
C332	1-161-016-00	CERAMIC	0.018MF	10%	25V
C333	1-161-002-00	CERAMIC	0.0012MF	10%	25V
C334	1-161-013-00	CERAMIC	0.01MF	10%	25V
C335	1-130-493-51	MYLAR	0.068MF	5%	50V
C336	1-123-613-00	ELECT	3.3MF	20%	50V
C337	1-102-978-00	CERAMIC	220PF	5%	50V
C338	1-123-294-00	ELECT	47MF	20%	6.3V
C339	1-123-616-00	ELECT	4.7MF	20%	25V
C340	1-123-616-00	ELECT	4.7MF	20%	25V
C341	1-130-488-00	MYLAR	0.027MF	5%	50V
C342	1-123-622-00	ELECT	22MF	20%	16V
C343	1-123-294-00	ELECT	47MF	20%	6.3V
C344	1-123-295-00	ELECT	100MF	20%	6.3V
C345	1-161-017-00	CERAMIC	0.022MF	10%	25V
C346	1-161-013-00	CERAMIC	0.01MF	10%	25V
C347	1-161-016-00	CERAMIC	0.018MF	10%	25V
C348	1-131-368-00	TANTALUM	3.3MF	20%	16V
C349	1-131-347-00	TANTALUM	1MF	20%	35V
C350	1-123-294-00	ELECT	47MF	20%	6.3V
C351	1-123-612-00	ELECT	2.2MF	20%	50V
C353	1-161-013-00	CERAMIC	0.01MF	10%	25V
C354	1-102-824-00	CERAMIC	430PF	5%	50V
C355	1-161-013-00	CERAMIC	0.01MF	10%	25V
C356	1-123-611-00	ELECT	1MF	20%	50V
C361	1-123-616-00	ELECT	4.7MF	20%	25V
C362	1-123-616-00	ELECT	4.7MF	20%	25V
C370	1-161-021-00	CERAMIC	0.047MF	10%	25V
C371	1-161-021-00	CERAMIC	0.047MF	10%	25V
C372	1-130-486-51	MYLAR	0.018MF	5%	50V
C373	1-123-616-00	ELECT	4.7MF	20%	25V
C374	1-161-021-00	CERAMIC	0.047MF	10%	25V
C401	1-123-021-00	ELECT	0.47MF	30%	50V
C402	1-123-616-00	ELECT	4.7MF	20%	25V
C403	1-101-888-00	CERAMIC	68PF	5%	50V
C601	1-123-612-00	ELECT	2.2MF	20%	50V
C603	1-101-880-00	CERAMIC	47PF	5%	50V
C604	1-101-880-00	CERAMIC	47PF	5%	50V
C605	1-123-617-00	ELECT	10MF	20%	16V
C606	1-123-617-00	ELECT	10MF	20%	16V
C607	1-123-610-00	ELECT	0.47MF	20%	50V
C608	1-123-617-00	ELECT	10MF	20%	16V
C609	1-101-884-00	CERAMIC	56PF	5%	50V
C610	1-161-021-00	CERAMIC	0.047MF	10%	25V
C611	1-161-021-00	CERAMIC	0.047MF	10%	25V
C612	1-161-021-00	CERAMIC	0.047MF	10%	25V
C613	1-161-021-00	CERAMIC	0.047MF	10%	25V
C614	1-161-021-00	CERAMIC	0.047MF	10%	25V
C615	1-161-021-00	CERAMIC	0.047MF	10%	25V
C616	1-161-021-00	CERAMIC	0.047MF	10%	25V
C617	1-161-021-00	CERAMIC	0.047MF	10%	25V
C618	1-161-021-00	CERAMIC	0.047MF	10%	25V
C619	1-123-306-00	ELECT	47MF	20%	10V
C620	1-123-318-00	ELECT	33MF	20%	16V

NOTE:

The components identified by shading and mark ⚠ are critical for safety. Replace only with part number specified.

Les composants identifiés par une trame et une marque ⚠ sont critiques pour la sécurité. Ne les remplacer que par une pièce portant le numéro spécifié.

When indicating parts by reference number, please include the board name.

- =>: Due to standardization, interchangeable replacements may be substituted for parts specified in the diagrams.
- Items marked " ♦ " are not stocked since they are seldom required for routine service. Some delay should be anticipated when ordering these items.

- All variable and adjustable resistors have characteristic curve B, unless otherwise noted.

CAPACITORS
- MF : μF, PF : μμF

RESISTORS
- All resistors are in ohms
- F : nonflammable

COILS
- MMH : mH, UH : μH

SS-10A BOARD

Ref.No	Part No	Description			Remark
C621	1-123-318-00	ELECT	33MF	20%	16V
C622	1-161-023-00	CERAMIC	0.068MF	10%	25V
C630	1-161-021-00	CERAMIC	0.047MF	10%	25V
C640	1-161-017-00	CERAMIC	0.022MF	10%	25V

CONNECTOR

CN001♦	1-560-466-00	PIN, CONNECTOR	3P
CN002♦	1-560-466-00	PIN, CONNECTOR	3P
CN003♦	1-560-469-00	PIN, CONNECTOR	6P
CN301♦	1-560-467-00	PIN, CONNECTOR	4P
CN302♦	1-560-466-00	PIN, CONNECTOR	3P
CN303♦	1-560-467-00	PIN, CONNECTOR	4P
CN304♦	1-560-456-00	PIN, CONNECTOR	2P
CN305♦	1-560-467-00	PIN, CONNECTOR	4P
CN306♦	1-560-466-00	PIN, CONNECTOR	3P
CN307♦	1-560-467-00	PIN, CONNECTOR	4P
CN308♦	1-560-472-00	PIN, CONNECTOR	12P
CN309♦	1-560-456-00	PIN, CONNECTOR	2P
CN310♦	1-560-460-00	PIN, CONNECTOR	4P
CN601♦	1-560-468-00	PIN, CONNECTOR	5P
CN602♦	1-560-470-00	PIN, CONNECTOR	8P
CN603♦	1-560-470-00	PIN, CONNECTOR	8P
CN604♦	1-560-470-00	PIN, CONNECTOR	8P
CN608♦	1-560-467-00	PIN, CONNECTOR	4P
CN609♦	1-560-468-00	PIN, CONNECTOR	5P
CN610♦	1-560-469-00	PIN, CONNECTOR	6P
CN611♦	1-560-470-00	PIN, CONNECTOR	8P
CN612♦	1-560-467-00	PIN, CONNECTOR	4P
CN613♦	1-560-470-00	PIN, CONNECTOR	8P
CN614♦	1-560-471-00	PIN, CONNECTOR	10P
CN615♦	1-560-467-00	PIN, CONNECTOR	4P
CN616♦	1-560-467-00	PIN, CONNECTOR	4P
CN617♦	1-560-467-00	PIN, CONNECTOR	4P
CN618♦	1-560-467-00	PIN, CONNECTOR	4P
CN619♦	1-560-467-00	PIN, CONNECTOR	4P
CN620♦	1-560-468-00	PIN, CONNECTOR	5P
CN621♦	1-560-471-00	PIN, CONNECTOR	10P
CN622♦	1-560-471-00	PIN, CONNECTOR	10P
CN623♦	1-560-469-00	PIN, CONNECTOR	6P
CN624♦	1-560-470-00	PIN, CONNECTOR	8P
CN625♦	1-560-472-00	PIN, CONNECTOR	12P
CN626♦	1-560-471-00	PIN, CONNECTOR	10P
CN627♦	1-560-470-00	PIN, CONNECTOR	8P

COMPOSITION CIRCUIT BLOCK

CP001	1-232-055-00	COMPOSITION CIRCUIT BLOCK
CP004	1-232-057-00	COMPOSITION CIRCUIT BLOCK
CP005	1-232-058-00	COMPOSITION CIRCUIT BLOCK
CP006	1-232-059-00	COMPOSITION CIRCUIT BLOCK
CP007	1-232-060-00	COMPOSITION CIRCUIT BLOCK
CP008	1-232-060-00	COMPOSITION CIRCUIT BLOCK
CP009	1-232-061-00	COMPOSITION CIRCUIT BLOCK
CP010	1-232-061-00	COMPOSITION CIRCUIT BLOCK
CP011	1-232-062-00	COMPOSITION CIRCUIT BLOCK
CP012	1-232-069-00	COMPOSITION CIRCUIT BLOCK
CP013	1-232-063-00	COMPOSITION CIRCUIT BLOCK
CP014	1-232-059-00	COMPOSITION CIRCUIT BLOCK
CP015	1-232-064-00	COMPOSITION CIRCUIT BLOCK
CP016	1-232-169-00	COMPOSITION CIRCUIT BLOCK
CP017	1-232-169-00	COMPOSITION CIRCUIT BLOCK
CP018	1-232-066-00	COMPOSITION CIRCUIT BLOCK
CP019	1-232-067-00	COMPOSITION CIRCUIT BLOCK
CP020	1-232-059-00	COMPOSITION CIRCUIT BLOCK
CP021	1-232-068-00	COMPOSITION CIRCUIT BLOCK
CP022	1-232-062-00	COMPOSITION CIRCUIT BLOCK
CP023	1-232-061-00	COMPOSITION CIRCUIT BLOCK
CP024	1-232-061-00	COMPOSITION CIRCUIT BLOCK
CP025	1-232-069-00	COMPOSITION CIRCUIT BLOCK
CP026	1-232-139-00	COMPOSITION CIRCUIT BLOCK
CP027	1-232-142-00	COMPOSITION CIRCUIT BLOCK
CP028	1-232-143-00	COMPOSITION CIRCUIT BLOCK
CP030	1-232-144-00	COMPOSITION CIRCUIT BLOCK
CP031	1-232-218-00	COMPOSITION CIRCUIT BLOCK
CP032	1-232-146-00	COMPOSITION CIRCUIT BLOCK
CP033	1-232-147-00	COMPOSITION CIRCUIT BLOCK
CP301	1-232-136-00	COMPOSITION CIRCUIT BLOCK
CP303	1-232-137-00	COMPOSITION CIRCUIT BLOCK
CP304	1-232-138-00	COMPOSITION CIRCUIT BLOCK
CP312	1-232-140-00	COMPOSITION CIRCUIT BLOCK
CP313	1-232-141-00	COMPOSITION CIRCUIT BLOCK
CP315	1-232-151-00	COMPOSITION CIRCUIT BLOCK
CP316	1-232-151-00	COMPOSITION CIRCUIT BLOCK
CP317	1-232-079-00	COMPOSITION CIRCUIT BLOCK
CP318	1-232-071-00	COMPOSITION CIRCUIT BLOCK
CP319	1-232-148-00	COMPOSITION CIRCUIT BLOCK
CP322	1-232-152-00	COMPOSITION CIRCUIT BLOCK
CP323	1-232-148-00	COMPOSITION CIRCUIT BLOCK
CP324	1-232-150-00	COMPOSITION CIRCUIT BLOCK
CP326	1-232-152-00	COMPOSITION CIRCUIT BLOCK
CP328	1-232-126-00	COMPOSITION CIRCUIT BLOCK
CP329	1-232-150-00	COMPOSITION CIRCUIT BLOCK
CP335	1-232-149-00	COMPOSITION CIRCUIT BLOCK
CP601	1-232-158-00	COMPOSITION CIRCUIT BLOCK
CP602	1-232-158-00	COMPOSITION CIRCUIT BLOCK
CP605	1-232-157-00	COMPOSITION CIRCUIT BLOCK
CP606	1-232-159-00	COMPOSITION CIRCUIT BLOCK
CP607	1-232-159-00	COMPOSITION CIRCUIT BLOCK
CP609	1-232-154-00	COMPOSITION CIRCUIT BLOCK
CP610	1-232-155-00	COMPOSITION CIRCUIT BLOCK
CP612	1-232-156-00	COMPOSITION CIRCUIT BLOCK
CP613	1-232-163-00	COMPOSITION CIRCUIT BLOCK
CP614	1-232-163-00	COMPOSITION CIRCUIT BLOCK
CP615	1-232-153-00	COMPOSITION CIRCUIT BLOCK

DIODE

D001	8-719-911-06	DIODE 1SS106

NOTE:

The components identified by shading and mark ⚠ are critical for safety. Replace only with part number specified.

Les composants identifiés par une trame et une marque ⚠ sont critiques pour la sécurité. Ne les remplacer que par une pièce portant le numéro spécifié.

When indicating parts by reference number, please include the board name.

- =>: Due to standardization, interchangeable replacements may be substituted for parts specified in the diagrams.
- Items marked " ♦ " are not stocked since they are seldom required for routine service. Some delay should be anticipated when ordering these items.
- All variable and adjustable resistors have characteristic curve B, unless otherwise noted.

CAPACITORS
- MF : μF, PF : μμF

RESISTORS
- All resistors are in ohms
- F : nonflammable

COILS
- MMH : mH, UH : μH

Ref.No	Part No	Description	Remark
DD02	8-719-911-06	DIODE 1SS106	
DD03	8-719-911-19	DIODE 1SS119	
DD08	8-719-911-19	DIODE 1SS119	
DD09	8-719-982-04	DIODE ERB81-004	
DD10	8-719-911-19	DIODE 1SS119	
DD12	8-719-911-19	DIODE 1SS119	
DD13	8-719-982-04	DIODE ERB81-004	
DD14	8-719-911-19	DIODE 1SS119	
DD15	8-719-911-19	DIODE 1SS119	
D301	8-719-911-06	DIODE 1SS106	
D302	8-719-911-19	DIODE 1SS119	
D303	8-719-982-04	DIODE ERB81-004	
D304	8-719-113-07	DIODE RD13E-B	
D305	8-719-911-06	DIODE 1SS106	
D306	8-719-911-19	DIODE 1SS119	
D307	8-719-911-19	DIODE 1SS119	
D308	8-719-911-06	DIODE 1SS106	
D309	8-719-911-19	DIODE 1SS119	
D310	8-719-911-19	DIODE 1SS119	
D311	8-719-911-19	DIODE 1SS119	
D312	8-719-911-19	DIODE 1SS119	
D313	8-719-911-19	DIODE 1SS119	
D314	8-719-911-19	DIODE 1SS119	
D315	8-719-911-19	DIODE 1SS119	
D316	8-719-911-19	DIODE 1SS119	
D317	8-719-911-19	DIODE 1SS119	
D318	8-719-911-19	DIODE 1SS119	
D401	8-719-911-19	DIODE 1SS119	
D603	=>8-719-901-33	DIODE 1SS133	
D604	8-719-911-06	DIODE 1SS106	
D612	8-719-911-06	DIODE 1SS106	
		FUSE	
F601⚠	1-532-625-00	FUSE, GLASS TUBE 1.25A 125V	
F602⚠	1-532-624-00	FUSE, GLASS TUBE 0.5A 125V	
F603⚠	1-532-595-00	FUSE, GLASS TUBE 3.15A 125V	
F604	1-532-605-00	FUSE, ELECTRIC CURRENT	
		IC	
IC001	8-759-103-93	IC UPC393C	
IC002	8-759-132-40	IC UPC324C	
IC003	8-759-132-40	IC UPC324C	
IC004	8-759-103-93	IC UPC393C	
IC005	8-743-980-00	IC BX-3980	
IC006	8-743-976-00	IC BX-3976	
IC301	8-751-940-02	IC CX-194A-2	
IC302	=>8-743-984-00	IC BX-3984	
IC303	8-743-983-00	IC BX-3983	
IC304	8-759-132-40	IC UPC324C	
IC305	8-759-904-94	IC TL494CN	
IC306	8-743-978-00	IC BX-3978	
IC307	8-759-240-30	IC TC4030BP	
IC308	8-759-240-53	IC TC4053BP	

Ref.No	Part No	Description	Remark
IC309	8-741-103-90	IC BX-1039	
IC310	8-743-981-00	IC BX-3981	
IC311	8-741-103-80	IC BX-1038	
IC312	8-759-250-26	IC TC5026BP	
IC313	8-759-240-51	IC TC4051BP	
IC314	8-741-013-10	IC BX-1013-1	
IC601	8-759-985-27	IC MB8845-527	
IC602	8-759-985-28	IC MB8845-528	
IC603	8-759-900-45	IC MB8845-549	
IC604	8-759-133-90	IC UPC339C	
IC605	8-759-220-04	IC TC40H004P	
IC606	8-759-240-69	IC TC4069UBP	
IC607	=>8-759-240-13	IC TC4013BP	
IC608	8-759-987-47	IC MB8747	
IC609	8-759-987-47	IC MB8747	
IC610	8-743-988-00	IC BX-3988	
IC611	8-759-900-04	IC SN74LS04N	
IC612	8-741-101-60	IC BX-1016	
		COIL	
L001	1-408-519-00	COIL, CHOKE 42UH	
L002	1-408-519-00	COIL, CHOKE 42UH	
L003	1-408-519-00	COIL, CHOKE 42UH	
L301	1-408-518-00	COIL, CHOKE 1MMH	
L302	1-459-232-00	COIL, CORE 90UH	
L601	1-408-409-00	MICRO INDUCTOR 10UH	
L602	1-408-409-00	MICRO INDUCTOR 10UH	
		TRANSISTOR	
Q001	8-729-117-54	TRANSISTOR 2SA1175	
Q002	8-729-178-54	TRANSISTOR 2SC2785	
Q003	8-729-178-54	TRANSISTOR 2SC2785	
Q004	8-729-178-54	TRANSISTOR 2SC2785	
Q006	8-729-178-54	TRANSISTOR 2SC2785	
Q007	8-729-178-54	TRANSISTOR 2SC2785	
Q008	8-729-117-54	TRANSISTOR 2SA1175	
Q009	8-729-178-54	TRANSISTOR 2SC2785	
Q010	8-729-178-54	TRANSISTOR 2SC2785	
Q011	8-729-178-54	TRANSISTOR 2SC2785	
Q012	8-729-178-54	TRANSISTOR 2SC2785	
Q013	8-729-178-54	TRANSISTOR 2SC2785	
Q014	8-729-178-54	TRANSISTOR 2SC2785	
Q015	8-729-178-54	TRANSISTOR 2SC2785	
Q016	8-729-117-54	TRANSISTOR 2SA1175	
Q017	8-729-113-33	TRANSISTOR 2SB733	
Q018	8-729-113-33	TRANSISTOR 2SB733	
Q019	8-729-178-54	TRANSISTOR 2SC2785	
Q020	8-729-178-54	TRANSISTOR 2SC2785	
Q021	8-729-178-54	TRANSISTOR 2SC2785	
Q022	8-729-178-54	TRANSISTOR 2SC2785	
Q023	8-729-178-54	TRANSISTOR 2SC2785	
Q024	8-729-117-54	TRANSISTOR 2SA1175	
Q025	8-729-113-33	TRANSISTOR 2SB733	

NOTE:

The components identified by shading and mark ⚠ are critical for safety. Replace only with part number specified.

Les composants identifiés par une trame et une marque ⚠ sont critiques pour la sécurité. Ne les remplacer que par une pièce portant le numéro spécifié.

When indicating parts by reference number, please include the board name.

- =>: Due to standardization, interchangeable replacements may be substituted for parts specified in the diagrams.
- Items marked " ♦ " are not stocked since they are seldom required for routine service. Some delay should be anticipated when ordering these items.
- All variable and adjustable resistors have characteristic curve B, unless otherwise noted.

CAPACITORS
- MF : μF, PF : μμF

RESISTORS
- All resistors are in ohms
- F : nonflammable

COILS
- MMH : mH, UH : μH

SS-10A BOARD

Ref.No	Part No	Description	Remark
Q026	8-729-113-33	TRANSISTOR 2SB733	
Q027	8-729-178-54	TRANSISTOR 2SC2785	
Q028	8-729-178-54	TRANSISTOR 2SC2785	
Q029	8-729-178-54	TRANSISTOR 2SC2785	
Q030	8-729-117-54	TRANSISTOR 2SA1175	
Q301	8-729-178-54	TRANSISTOR 2SC2785	
Q302	8-729-177-32	TRANSISTOR 2SD773	
Q303	8-729-117-54	TRANSISTOR 2SA1175	
Q304	=>8-729-113-33	TRANSISTOR 2SB733-U2	
Q305	8-729-178-54	TRANSISTOR 2SC2785	
Q307	8-729-178-54	TRANSISTOR 2SC2785	
Q308	8-729-178-54	TRANSISTOR 2SC2785	
Q309	8-729-117-54	TRANSISTOR 2SA1175	
Q310	8-729-178-54	TRANSISTOR 2SC2785	
Q311	8-729-178-54	TRANSISTOR 2SC2785	
Q314	8-729-178-54	TRANSISTOR 2SC2785	
Q315	8-729-178-54	TRANSISTOR 2SC2785	
Q317	8-729-178-54	TRANSISTOR 2SC2785	
Q318	8-729-117-54	TRANSISTOR 2SA1175	
Q320	8-729-178-54	TRANSISTOR 2SC2785	
Q321	8-729-117-54	TRANSISTOR 2SA1175	
Q322	8-729-117-54	TRANSISTOR 2SA1175	
Q324	8-729-178-54	TRANSISTOR 2SC2785	
Q325	8-729-178-54	TRANSISTOR 2SC2785	
Q326	8-729-117-54	TRANSISTOR 2SA1175	
Q327	8-729-178-54	TRANSISTOR 2SC2785	
Q328	8-729-178-54	TRANSISTOR 2SC2785	
Q401	8-729-178-54	TRANSISTOR 2SC2785	
Q601	8-729-178-54	TRANSISTOR 2SC2785	
Q602	8-729-178-54	TRANSISTOR 2SC2785	
Q603	8-729-178-54	TRANSISTOR 2SC2785	
Q604	8-729-113-33	TRANSISTOR 2SB733	
Q605	8-729-178-54	TRANSISTOR 2SC2785	
Q606	8-729-178-54	TRANSISTOR 2SC2785	
Q607	8-729-178-54	TRANSISTOR 2SC2785	
Q613	8-729-178-54	TRANSISTOR 2SC2785	
Q614	8-729-178-54	TRANSISTOR 2SC2785	
Q615	8-729-178-54	TRANSISTOR 2SC2785	
Q616	8-729-178-54	TRANSISTOR 2SC2785	
Q617	8-729-178-54	TRANSISTOR 2SC2785	
Q618	8-729-178-54	TRANSISTOR 2SC2785	
Q620	8-729-178-54	TRANSISTOR 2SC2785	
Q621	8-729-178-54	TRANSISTOR 2SC2785	
Q624	8-729-117-54	TRANSISTOR 2SA1175	
Q625	8-729-117-54	TRANSISTOR 2SA1175	
Q626	8-729-117-54	TRANSISTOR 2SA1175	
Q640	8-729-178-54	TRANSISTOR 2SC2785	

RESISTOR

Ref.No	Part No	Description			Remark
R011	1-246-803-00	CARBON	47K	1/8W	
R014	1-247-055-00	CARBON	300K	1/8W	
R017	1-246-803-00	CARBON	47K	1/8W	
R018	1-246-859-00	CARBON	20K	1/8W	
R020	1-246-799-00	CARBON	22K	1/8W	
R021	1-246-803-00	CARBON	47K	1/8W	
R022	1-246-794-00	CARBON	8.2K	1/8W	
R023	1-246-785-00	CARBON	1.5K	1/8W	
R030	1-246-803-00	CARBON	47K	1/8W	
R031	1-246-791-00	CARBON	4.7K	1/8W	
R032	1-246-803-00	CARBON	47K	1/8W	
R035	1-246-803-00	CARBON	47K	1/8W	
R037	1-246-783-00	CARBON	1K	1/8W	
R038	1-246-799-00	CARBON	22K	1/8W	
R041	1-246-799-00	CARBON	22K	1/8W	
R042	1-246-799-00	CARBON	22K	1/8W	
R043	1-246-795-00	CARBON	10K	1/8W	
R044	1-246-803-00	CARBON	47K	1/8W	
R045	1-246-449-00	CARBON	100 5%	1/4W	
R046	1-246-457-00	CARBON	220 5%	1/4W	
R055	1-244-861-00	CARBON	330 5%	1/2W	
R056	1-246-783-00	CARBON	1K	1/8W	
R057 ⚠	1-217-612-00	WIREWOUND	0.1	2W	F
R058	1-246-801-00	CARBON	33K	1/8W	
R060	1-246-860-00	CARBON	24K	1/8W	
R064	1-247-049-00	CARBON	470K	1/8W	
R068	1-246-795-00	CARBON	10K	1/8W	
R071	1-247-057-00	CARBON	430K	1/8W	
R073	1-246-795-00	CARBON	10K	1/8W	
R080	1-246-783-00	CARBON	1K	1/8W	
R081	1-246-807-00	CARBON	100K	1/8W	
R082	1-247-049-00	CARBON	470K	1/8W	
R083	1-246-791-00	CARBON	4.7K	1/8W	
R084	1-246-791-00	CARBON	4.7K	1/8W	
R085	1-246-799-00	CARBON	22K	1/8W	
R089	1-246-795-00	CARBON	10K	1/8W	
R090	1-247-049-00	CARBON	470K	1/8W	
R091	1-246-807-00	CARBON	100K	1/8W	
R093	1-246-803-00	CARBON	47K	1/8W	
R094	1-246-795-00	CARBON	10K	1/8W	
R095	1-246-449-00	CARBON	100 5%	1/4W	
R096	1-246-457-00	CARBON	220 5%	1/4W	
R103	1-244-861-00	CARBON	330 5%	1/2W	
R106	1-246-783-00	CARBON	1K	1/8W	
R108	1-246-803-00	CARBON	47K	1/8W	
R110	1-246-811-00	CARBON	220K	1/8W	
R111	1-246-803-00	CARBON	47K	1/8W	
R113	1-246-803-00	CARBON	47K	1/8W	
R114	1-246-803-00	CARBON	47K	1/8W	
R115	1-246-801-00	CARBON	33K	1/8W	
R116	1-246-847-00	CARBON	2K	1/8W	
R117	1-246-799-00	CARBON	22K	1/8W	
R118	1-246-799-00	CARBON	22K	1/8W	
R301	1-246-799-00	CARBON	22K	1/8W	
R302	1-246-793-00	CARBON	6.8K	1/8W	
R303	1-246-797-00	CARBON	15K	1/8W	
R304	1-246-795-00	CARBON	10K	1/8W	

NOTE:

The components identified by shading and mark ⚠ are critical for safety. Replace only with part number specified.

Les composants identifiés par une trame et une marque ⚠ sont critiques pour la sécurité. Ne les remplacer que par une pièce portant le numéro spécifié.

When indicating parts by reference number, please include the board name.

- =>: Due to standardization, interchangeable replacements may be substituted for parts specified in the diagrams.
- Items marked " ♦ " are not stocked since they are seldom required for routine service. Some delay should be anticipated when ordering these items.
- All variable and adjustable resistors have characteristic curve B, unless otherwise noted.

CAPACITORS
- MF : μF, PF : μμF

RESISTORS
- All resistors are in ohms
- F : nonflammable

COILS
- MMH : mH, UH : μH

Ref.No	Part No	Description			Remark
R310	1-246-795-00	CARBON	10K	1/8W	
R311	1-246-795-00	CARBON	10K	1/8W	
R315	1-246-791-00	CARBON	4.7K	1/8W	
R316	1-246-805-00	CARBON	68K	1/8W	
R317	1-246-803-00	CARBON	47K	1/8W	
R318	1-246-852-00	CARBON	5.1K	1/8W	
R321	1-246-783-00	CARBON	1K	1/8W	
R322 ⚠	1-212-356-00	METAL	0.47 5%	1W F	
R323	1-246-799-00	CARBON	22K	1/8W	
R327	1-246-797-00	CARBON	15K	1/8W	
R330	1-246-788-00	CARBON	2.7K	1/8W	
R331	1-246-809-00	CARBON	150K	1/8W	
R334	1-246-801-00	CARBON	33K	1/8W	
R337	1-246-801-00	CARBON	33K	1/8W	
R338	1-246-809-00	CARBON	150K	1/8W	
R339	1-246-810-00	CARBON	180K	1/8W	
R340	1-246-788-00	CARBON	2.7K	1/8W	
R342	1-246-801-00	CARBON	33K	1/8W	
R344	1-246-801-00	CARBON	33K	1/8W	
R345	1-246-801-00	CARBON	33K	1/8W	
R346	1-246-807-00	CARBON	100K	1/8W	
R347	1-246-806-00	CARBON	82K	1/8W	
R348	1-246-801-00	CARBON	33K	1/8W	
R353	1-246-769-00	CARBON	68	1/8W	
R354	1-246-795-00	CARBON	10K	1/8W	
R355	1-246-795-00	CARBON	10K	1/8W	
R358	1-246-795-00	CARBON	10K	1/8W	
R363	1-246-809-00	CARBON	150K	1/8W	
R364	1-246-801-00	CARBON	33K	1/8W	
R365	1-246-866-00	CARBON	75K	1/8W	
R366	1-246-859-00	CARBON	20K	1/8W	
R367	1-246-799-00	CARBON	22K	1/8W	
R368	1-246-804-00	CARBON	56K	1/8W	
R369	1-246-800-00	CARBON	27K	1/8W	
R370	1-246-802-00	CARBON	39K	1/8W	
R371	1-246-795-00	CARBON	10K	1/8W	
R373	1-246-783-00	CARBON	1K	1/8W	
R374	1-246-804-00	CARBON	56K	1/8W	
R375	1-246-795-00	CARBON	10K	1/8W	
R376	1-246-795-00	CARBON	10K	1/8W	
R377	1-246-795-00	CARBON	10K	1/8W	
R378	1-246-799-00	CARBON	22K	1/8W	
R381	1-246-783-00	CARBON	1K	1/8W	
R382	1-246-795-00	CARBON	10K	1/8W	
R383	1-246-803-00	CARBON	47K	1/8W	
R387	1-246-795-00	CARBON	10K	1/8W	
R390	1-246-851-00	CARBON	4.3K	1/8W	
R391	1-246-803-00	CARBON	47K	1/8W	
R392	1-246-799-00	CARBON	22K	1/8W	
R393	1-246-799-00	CARBON	22K	1/8W	
R394	1-246-795-00	CARBON	10K	1/8W	
R396	1-246-810-00	CARBON	180K	1/8W	
R397	1-246-801-00	CARBON	33K	1/8W	

Ref.No	Part No	Description			Remark
R399	1-246-837-00	CARBON	300	1/8W	
R400	1-246-798-00	CARBON	18K	1/8W	
R401	1-246-779-00	CARBON	470	1/8W	
R404	1-246-801-00	CARBON	33K	1/8W	
R407	1-246-803-00	CARBON	47K	1/8W	
R411	1-246-803-00	CARBON	47K	1/8W	
R412	1-246-795-00	CARBON	10K	1/8W	
R414	1-246-783-00	CARBON	1K	1/8W	
R415	1-246-803-00	CARBON	47K	1/8W	
R415	1-246-799-00	CARBON	22K	1/8W	
R451	1-247-047-00	CARBON	330K	1/8W	
R452	1-246-797-00	CARBON	15K	1/8W	
R453	1-247-054-00	CARBON	240K	1/8W	
R460	1-246-795-00	CARBON	10K	1/8W	
R468	1-246-791-00	CARBON	4.7K	1/8W	
R473	1-246-803-00	CARBON	47K	1/8W	
R474	1-246-787-00	CARBON	2.2K	1/8W	
R479	1-246-807-00	CARBON	100K	1/8W	
R480	1-246-805-00	CARBON	68K	1/8W	
R481	1-246-805-00	CARBON	68K	1/8W	
R482	1-246-805-00	CARBON	68K	1/8W	
R483	1-246-801-00	CARBON	33K	1/8W	
R484	1-246-791-00	CARBON	4.7K	1/8W	
R487	1-246-795-00	CARBON	10K	1/8W	
R488	1-246-800-00	CARBON	27K	1/8W	
R489	1-246-845-00	CARBON	1.3K	1/8W	
R490	1-246-845-00	CARBON	1.3K	1/8W	
R491	1-246-845-00	CARBON	1.3K	1/8W	
R492	1-246-797-00	CARBON	15K	1/8W	
R495	1-246-444-00	CARBON	62 5%	1/4W	
R496	1-246-779-00	CARBON	470	1/8W	
R498	1-246-803-00	CARBON	47K	1/8W	
R499	1-246-791-00	CARBON	4.7K	1/8W	
R501	1-246-850-00	CARBON	3.6K	1/8W	
R502	1-246-852-00	CARBON	5.1K	1/8W	
R503	1-246-759-00	CARBON	10	1/8W	
R601	1-246-799-00	CARBON	22K	1/8W	
R602	1-246-807-00	CARBON	100K	1/8W	
R603	1-246-799-00	CARBON	22K	1/8W	
R605	1-246-807-00	CARBON	100K	1/8W	
R606	1-246-803-00	CARBON	47K	1/8W	
R607	1-246-791-00	CARBON	4.7K	1/8W	
R608	1-246-807-00	CARBON	100K	1/8W	
R609	1-246-469-00	CARBON	680 5%	1/4W	
R610	1-246-803-00	CARBON	47K	1/8W	
R511	1-246-807-00	CARBON	100K	1/8W	
R612	1-246-807-00	CARBON	100K	1/8W	
R613	1-246-803-00	CARBON	47K	1/8W	
R615	1-246-783-00	CARBON	1K	1/8W	
R616	1-246-859-00	CARBON	20K	1/8W	
R617	1-246-795-00	CARBON	10K	1/8W	
R618	1-246-791-00	CARBON	4.7K	1/8W	
R627	1-246-791-00	CARBON	4.7K	1/8W	

NOTE:

The components identified by shading and mark ⚠ are critical for safety. Replace only with part number specified.

Les composants identifiés par une trame et une marque ⚠ sont critiques pour la sécurité. Ne les remplacer que par une pièce portant le numéro spécifié.

When indicating parts by reference number, please include the board name.

- =>: Due to standardization, interchangeable replacements may be substituted for parts specified in the diagrams.
- Items marked " ♦ " are not stocked since they are seldom required for routine service. Some delay should be anticipated when ordering these items.
- All variable and adjustable resistors have characteristic curve B, unless otherwise noted.

CAPACITORS
- MF : μF, PF : μμF

RESISTORS
- All resistors are in ohms
- F : nonflammable

COILS
- MMH : mH, UH : μH

SS-10A BOARD

FU-3 BOARD

Ref.No	Part No	Description			Remark
R628	1-246-791-00	CARBON	4.7K	1/8W	
R629	1-246-791-00	CARBON	4.7K	1/8W	
R630	1-246-791-00	CARBON	4.7K	1/8W	
R631	1-246-791-00	CARBON	4.7K	1/8W	
R632	1-246-791-00	CARBON	4.7K	1/8W	
R633	1-246-801-00	CARBON	33K	1/8W	
R633	1-246-803-00	CARBON	47K	1/8W	
R634	1-246-803-00	CARBON	47K	1/8W	
R635	1-246-803-00	CARBON	47K	1/8W	
R640	1-247-049-00	CARBON	470K	1/8W	
R645	1-246-795-00	CARBON	10K	1/8W	
R648	1-246-791-00	CARBON	4.7K	1/8W	
R649	1-246-791-00	CARBON	4.7K	1/8W	
R650	1-246-791-00	CARBON	4.7K	1/8W	
R660	1-246-803-00	CARBON	47K	1/8W	
R690	1-246-783-00	CARBON	1K	1/8W	
R691	1-246-803-00	CARBON	47K	1/8W	
R693	1-246-783-00	CARBON	1K	1/8W	
R694	1-246-795-00	CARBON	10K	1/8W	
R695	1-246-795-00	CARBON	10K	1/8W	
R699	1-246-807-00	CARBON	100K	1/8W	
R703	1-246-751-00	CARBON	2.2	1/8W	

VARIABLE RESISTOR

RV001	1-226-774-00	RES, ADJ, METAL GLAZE	47K
RV002	1-226-773-00	RES, ADJ, METAL GLAZE	22K
RV301	1-226-753-00	RES, ADJ, SOLID	47K
RV302	1-224-254-XX	RES, ADJ, METAL GLAZE	47K
RV303	1-226-771-00	RES, ADJ, METAL GLAZE	1K
RV304	1-226-753-00	RES, ADJ, SOLID	47K
RV305	1-226-753-00	RES, ADJ, SOLID	47K
RV306	1-226-774-00	RES, ADJ, METAL GLAZE	47K
RV307	1-226-703-00	RES, ADJ, METAL GLAZE	10K
RV308	1-226-703-00	RES, ADJ, METAL GLAZE	10K
RV309	1-226-703-00	RES, ADJ, METAL GLAZE	10K
RV310	1-226-703-00	RES, ADJ, METAL GLAZE	10K
RV314	1-226-753-00	RES, ADJ, SOLID	47K
RV315	1-226-701-00	RES, ADJ, METAL GLAZE	220
RV316	1-226-701-00	RES, ADJ, METAL GLAZE	220
RV317	1-226-753-00	RES, ADJ, SOLID	47K

THERMISTOR

TH001	1-800-200-00	THERMISTOR S-3K
TH301	1-800-200-00	THERMISTOR S-3K

CRYSTAL

X601	1-527-726-00	VIBRATOR, CRYSTAL

Ref.No	Part No	Description	Remark
♦	A-6717-225-A	FU-3 BOARD, COMPLETE **********	
♦	3-670-094-02	HOLDER, LED, 6 GANG	
♦	3-670-095-00	HOLDER, LED	
♦	3-674-312-00	COVER, 3 GANG LED	
♦	3-674-313-00	COVER, LED	
♦	3-674-314-00	PROTECTOR (A)	
♦	3-674-315-00	PROTECTOR (B)	
♦	3-674-316-00	RETAINER, HARNESS	

CAPACITOR

C001	1-161-013-00	CERAMIC	0.01MF	10%	25V
C002	1-123-617-00	ELECT	10MF	20%	16V
C003	1-161-321-00	CERAMIC	680PF	10%	50V

DIODE

D001	8-719-812-30	DIODE TL0123
D002	8-719-914-02	DIODE BR3402S
D003	8-719-914-33	DIODE PG3432SY
D004	8-719-812-32	DIODE TLY123
D005	8-719-812-32	DIODE TLY123
D006	8-719-812-32	DIODE TLY123
D008	8-719-914-02	DIODE BR3402S
D009	8-719-932-22	DIODE GL-9NG922B
D010	8-719-932-22	DIODE GL-9NG922B
D011	8-719-932-22	DIODE GL-9NG922B
D012	8-719-932-22	DIODE GL-9NG922B
DD13	8-719-932-22	DIODE GL-9NG922B
D014	8-719-932-22	DIODE GL-9NG922B
D015	8-719-914-33	DIODE PG3432SY
D016	8-719-914-33	DIODE PG3432SY
D017	8-719-914-33	DIODE PG3432SY
D018	8-719-914-33	DIODE PG3432SY
D019	8-719-914-33	DIODE PG3432SY
D020	8-719-914-33	DIODE PG3432SY
D021	8-719-914-33	DIODE PG3432SY
D022	8-719-914-33	DIODE PG3432SY
D023	8-719-914-33	DIODE PG3432SY
D024	8-719-812-32	DIODE TLY123
D026	8-719-812-32	DIODE TLY123
D027	8-719-812-32	DIODE TLY123
D028	8-719-812-32	DIODE TLY123
D029	8-719-911-06	DIODE 1SS106
D030	8-719-911-06	DIODE 1SS106
D031	8-719-911-06	DIODE 1SS106

IC

IC001	8-759-987-58	IC MB8758

TRANSISTOR

Q001	8-729-178-54	TRANSISTOR 2SC2785
Q002	8-729-178-54	TRANSISTOR 2SC2785

NOTE:

The components identified by shading and mark ⚠ are critical for safety. Replace only with part number specified.

Les composants identifiés par une trame et une marque ⚠ sont critiques pour la sécurité. Ne les remplacer que par une pièce portant le numéro spécifié.

When indicating parts by reference number, please include the board name.

- =>: Due to standardization, interchangeable replacements may be substituted for parts specified in the diagrams.
- Items marked " ♦ " are not stocked since they are seldom required for routine service. Some delay should be anticipated when ordering these items.
- All variable and adjustable resistors have characteristic curve B, unless otherwise noted.

CAPACITORS
- MF : μF, PF : μμF

RESISTORS
- All resistors are in ohms
- F : nonflammable

COILS
- MMH : mH, UH : μH

Ref.No	Part No	Description			Remark
Q003	8-729-178-54	TRANSISTOR 2SC2785			
Q004	8-729-178-54	TRANSISTOR 2SC2785			
Q005	8-729-178-54	TRANSISTOR 2SC2785			
Q006	8-729-178-54	TRANSISTOR 2SC2785			
Q007	8-729-178-54	TRANSISTOR 2SC2785			
Q008	8-729-178-54	TRANSISTOR 2SC2785			
		RESISTOR			
R001	1-246-776-00	CARBON	270	1/8W	
R002	1-246-776-00	CARBON	270	1/8W	
R003	1-246-773-00	CARBON	150	1/8W	
R005	1-246-776-00	CARBON	270	1/8W	
R006	1-246-795-00	CARBON	10K	1/8W	
R007	1-246-795-00	CARBON	10K	1/8W	
R008	1-246-795-00	CARBON	10K	1/8W	
R015	1-246-773-00	CARBON	150	1/8W	
R016	1-246-773-00	CARBON	150	1/8W	
R018	1-246-776-00	CARBON	270	1/8W	
R019	1-246-773-00	CARBON	150	1/8W	
R020	1-246-773-00	CARBON	150	1/8W	
		SWITCH			
S001	1-553-766-00	SWITCH, KEY BOARD			
S002	1-553-766-00	SWITCH, KEY BOARD			
S003	1-553-766-00	SWITCH, KEY BOARD			
S004	1-553-766-00	SWITCH, KEY BOARD			
S005	1-553-766-00	SWITCH, KEY BOARD			
S006	1-553-766-00	SWITCH, KEY BOARD			
S007	1-553-766-00	SWITCH, KEY BOARD			
S008	1-553-766-00	SWITCH, KEY BOARD			
S009	1-553-766-00	SWITCH, KEY BOARD			
S010	1-553-766-00	SWITCH, KEY BOARD			
S011	1-553-766-00	SWITCH, KEY BOARD			
S012	1-553-766-00	SWITCH, KEY BOARD			
S013	1-553-766-00	SWITCH, KEY BOARD			
S014	1-553-766-00	SWITCH, KEY BOARD			
S016	1-553-766-00	SWITCH, KEY BOARD			
S017	1-553-766-00	SWITCH, KEY BOARD			
S018	1-553-766-00	SWITCH, KEY BOARD			
S019	1-553-766-00	SWITCH, KEY BOARD			
S020	1-553-766-00	SWITCH, KEY BOARD			
S021	1-553-766-00	SWITCH, KEY BOARD			
S022	1-553-766-00	SWITCH, KEY BOARD			
S023	1-553-766-00	SWITCH, KEY BOARD			

****

♦:1-606-231-00 MB-3 BOARD
****

		CAPACITOR			
C329	1-161-057-00	CERAMIC	0.033MF	10%	50V
C802	1-123-611-00	ELECT	1MF	20%	50V

Ref.No	Part No	Description			Remark
		DIODE			
D319	8-719-911-19	DIODE 1SS119			
		TRANSISTOR			
Q803	8-729-117-54	TRANSISTOR 2SA1175			
		RESISTOR			
R395	1-246-804-00	CARBON	56K	1/8W	
R805	1-246-807-00	CARBON	100K	1/8W	

****

♦:A-6717-236-A RR-1A BOARD, COMPLETE
****

3-572-085-00 WASHER, FIBER
♦:3-670-059-00 BRACKET (RIGHT), RR
♦:3-670-060-00 BRACKET (LEFT), RR
♦:3-671-850-00 CASE, SHIELD, RR-1
3-701-822-00 HOLDER, WIRE

		CAPACITOR			
C001	1-123-613-00	ELECT	3.3MF	20%	50V
C002	1-161-021-00	CERAMIC	0.047MF	10%	25V
C003	1-102-973-00	CERAMIC	100PF	5%	50V
C101	1-161-021-00	CERAMIC	0.047MF	10%	25V
C103	1-102-111-00	CERAMIC	270PF	10%	50V
C104	1-102-824-00	CERAMIC	470PF	5%	50V
C201	1-161-021-00	CERAMIC	0.047MF	10%	25V
C202	1-102-824-00	CERAMIC	470PF	5%	50V
C203	1-102-111-00	CERAMIC	270PF	10%	50V
C205	1-123-617-00	ELECT	10MF	20%	16V
C206	1-123-821-00	ELECT	47MF	20%	16V
C207	1-161-039-00	CERAMIC	0.001MF	10%	25V
C208	1-161-039-00	CERAMIC	0.001MF	10%	25V
C209	1-102-112-00	CERAMIC	330PF	10%	50V
C301	1-123-839-00	ELECT	1000MF	20%	16V
C302	1-123-820-00	ELECT	33MF	20%	16V
C303	1-123-611-00	ELECT	1MF	20%	50V

CONNECTOR

CN101♦	1-560-463-00	PIN, CONNECTOR 8P
CN102♦	1-560-469-00	PIN, CONNECTOR 6P
CN103♦	1-560-464-00	PIN, CONNECTOR 10P
CN201♦	1-560-466-00	PIN, CONNECTOR 3P
CN202♦	1-560-467-00	PIN, CONNECTOR 4P
CN203♦	1-560-470-00	PIN, CONNECTOR 8P
CN301♦	1-560-471-00	PIN, CONNECTOR 10P
CN302♦	1-560-456-00	PIN, CONNECTOR 2P
CN303♦	1-560-470-00	PIN, CONNECTOR 8P

DIODE

D001	8-719-911-19	DIODE 1SS119

NOTE:

The components identified by shading and mark ⚠ are critical for safety. Replace only with part number specified.

Les composants identifiés par une trame et une marque ⚠ sont critiques pour la sécurité. Ne les remplacer que par une pièce portant le numéro spécifié.

When indicating parts by reference number, please include the board name.

- =>: Due to standardization, interchangeable replacements may be substituted for parts specified in the diagrams.
- Items marked " ♦ " are not stocked since they are seldom required for routine service. Some delay should be anticipated when ordering these items.
- All variable and adjustable resistors have characteristic curve B, unless otherwise noted.

CAPACITORS
- MF : μF, PF : μμF

RESISTORS
- All resistors are in ohms
- F : nonflammable

COILS
- MMH : mH, UH : μH

RR-1A BOARD

Ref.No	Part No	Description	Remark
D102	8-719-911-19	DIODE 1SS119	
D201	8-719-100-30	DIODE RD5.1E-B2	
D301	8-719-911-19	DIODE 1SS119	
D302	8-719-911-19	DIODE 1SS119	
D305	8-719-200-02	DIODE 10E-2	
D306	8-719-200-02	DIODE 10E-2	
D307	8-719-200-02	DIODE 10E-2	
D308	8-719-200-02	DIODE 10E-2	
D309	8-719-200-02	DIODE 10E-2	
D310	8-719-200-02	DIODE 10E-2	
D311	8-719-200-02	DIODE 10E-2	
D312	8-719-200-02	DIODE 10E-2	
D313	8-719-200-02	DIODE 10E-2	
D314	8-719-200-02	DIODE 10E-2	
D315	8-719-200-02	DIODE 10E-2	
D316	8-719-200-02	DIODE 10E-2	
D317	8-719-911-19	DIODE 1SS119	
D318	8-719-911-19	DIODE 1SS119	
D319	8-719-200-02	DIODE 10E-2	
		IC	
IC001	8-759-103-93	IC UPC393C	
IC101	8-759-115-18	IC UPD651G-518	
IC201	8-759-115-17	IC UPD651G-517	
		TRANSISTOR	
Q101	8-729-178-54	TRANSISTOR 2SC2785	
Q102	8-729-178-54	TRANSISTOR 2SC2785	
Q103	8-729-178-54	TRANSISTOR 2SC2785	
Q104	8-729-178-54	TRANSISTOR 2SC2785	
Q105	8-729-178-54	TRANSISTOR 2SC2785	
Q106	8-729-178-54	TRANSISTOR 2SC2785	
Q108	8-729-178-54	TRANSISTOR 2SC2785	
Q203	8-729-178-54	TRANSISTOR 2SC2785	
Q204	8-729-178-54	TRANSISTOR 2SC2785	
Q301	8-729-177-32	TRANSISTOR 2SD773	
Q302	8-729-177-32	TRANSISTOR 2SD773	
Q303	8-729-113-32	TRANSISTOR 2SB733	
Q304	8-729-113-32	TRANSISTOR 2SB733	
Q305	8-729-177-32	TRANSISTOR 2SD773	
Q306	8-729-177-32	TRANSISTOR 2SD773	
Q307	8-729-113-32	TRANSISTOR 2SB733	
Q308	8-729-113-32	TRANSISTOR 2SB733	
Q309	8-729-116-42	TRANSISTOR 2SD1164	
Q310	8-729-116-42	TRANSISTOR 2SD1164	
Q311	8-729-116-42	TRANSISTOR 2SD1164	
Q312	8-729-116-42	TRANSISTOR 2SD1164	
Q313	8-729-178-54	TRANSISTOR 2SC2785	
Q314	8-729-178-54	TRANSISTOR 2SC2785	
Q315	8-729-178-54	TRANSISTOR 2SC2785	
Q316	8-729-178-54	TRANSISTOR 2SC2785	
Q332	8-729-117-54	TRANSISTOR 2SA1175	

Ref.No	Part No	Description			Remark
		RESISTOR			
R001	1-246-799-00	CARBON	22K	1/8W	
R002	1-246-807-00	CARBON	100K	1/8W	
R003	1-246-795-00	CARBON	10K	1/8W	
R004	1-246-788-00	CARBON	2.7K	1/8W	
R005	1-246-795-00	CARBON	10K	1/8W	
R006	1-246-805-00	CARBON	68K	1/8W	
R101	1-246-854-00	CARBON	7.5K	1/8W	
R102	1-246-854-00	CARBON	7.5K	1/8W	
R103	1-246-854-00	CARBON	7.5K	1/8W	
R104	1-246-854-00	CARBON	7.5K	1/8W	
R105	1-246-854-00	CARBON	7.5K	1/8W	
R106	1-246-854-00	CARBON	7.5K	1/8W	
R114	1-247-049-00	CARBON	470K	1/8W	
R115	1-246-795-00	CARBON	10K	1/8W	
R118	1-246-795-00	CARBON	10K	1/8W	
R119	1-246-807-00	CARBON	100K	1/8W	
R120	1-246-807-00	CARBON	100K	1/8W	
R130	1-246-773-00	CARBON	150	1/8W	
R131	1-246-773-00	CARBON	150	1/8W	
R132	1-246-773-00	CARBON	150	1/8W	
R133	1-246-773-00	CARBON	150	1/8W	
R134	1-246-773-00	CARBON	150	1/8W	
R135	1-246-773-00	CARBON	150	1/8W	
R201	1-246-781-00	CARBON	680	1/8W	
R203	1-246-805-00	CARBON	68K	1/8W	
R204	1-246-795-00	CARBON	10K	1/8W	
R205	1-247-049-00	CARBON	470K	1/8W	
R208	1-246-799-00	CARBON	22K	1/8W	
R209	1-246-795-00	CARBON	10K	1/8W	
R211	1-246-795-00	CARBON	10K	1/8W	
R212	1-246-795-00	CARBON	10K	1/8W	
R213	1-246-795-00	CARBON	10K	1/8W	
R214	1-246-795-00	CARBON	10K	1/8W	
R215	1-246-795-00	CARBON	10K	1/8W	
R216	1-246-795-00	CARBON	10K	1/8W	
R217	1-246-795-00	CARBON	10K	1/8W	
R218	1-246-807-00	CARBON	100K	1/8W	
R219	1-246-795-00	CARBON	10K	1/8W	
R220	1-246-795-00	CARBON	10K	1/8W	
R223	1-246-795-00	CARBON	10K	1/8W	
R224	1-246-795-00	CARBON	10K	1/8W	
R225	1-246-807-00	CARBON	100K	1/8W	
R226	1-246-795-00	CARBON	10K	1/8W	
R227	1-246-789-00	CARBON	3.3K	1/8W	
R228	1-246-780-00	CARBON	560	1/8W	
R229	1-246-795-00	CARBON	10K	1/8W	
R230	1-246-783-00	CARBON	1K	1/8W	
R231	1-246-783-00	CARBON	1K	1/8W	
R232	1-246-807-00	CARBON	100K	1/8W	
R234	1-246-795-00	CARBON	10K	1/8W	
R235	1-246-776-00	CARBON	270	1/8W	

NOTE:

The components identified by shading and mark ⚠ are critical for safety. Replace only with part number specified.

Les composants identifiés par une trame et une marque ⚠ sont critiques pour la sécurité. Ne les remplacer que par une pièce portant le numéro spécifié.

When indicating parts by reference number, please include the board name.

- =>: Due to standardization, interchangeable replacements may be substituted for parts specified in the diagrams.
- Items marked " ♦ " are not stocked since they are seldom required for routine service. Some delay should be anticipated when ordering these items.
- All variable and adjustable resistors have characteristic curve B, unless otherwise noted.

CAPACITORS
- MF : μF, PF : μμF

RESISTORS
- All resistors are in ohms
- F : nonflammable

COILS
- MMH : mH, UH : μH

Ref.No	Part No	Description				Remark
R236	1-246-803-00	CARBON	47K		1/8W	
R240	1-246-787-00	CARBON	2.2K		1/8W	
R301	1-246-783-00	CARBON	1K		1/8W	
R302	1-246-783-00	CARBON	1K		1/8W	
R303	1-246-789-00	CARBON	3.3K		1/8W	
R304	1-246-789-00	CARBON	3.3K		1/8W	
R305	1-246-843-00	CARBON	910		1/8W	
R306	1-246-843-00	CARBON	910		1/8W	
R307	1-246-783-00	CARBON	1K		1/8W	
R308	1-246-783-00	CARBON	1K		1/8W	
R309	1-246-789-00	CARBON	3.3K		1/8W	
R310	1-246-789-00	CARBON	3.3K		1/8W	
R311	1-246-843-00	CARBON	910		1/8W	
R312	1-246-843-00	CARBON	910		1/8W	
R313	1-246-783-00	CARBON	1K		1/8W	
R314	1-246-783-00	CARBON	1K		1/8W	
R315	1-246-783-00	CARBON	1K		1/8W	
R316	1-246-783-00	CARBON	1K		1/8W	
R317	1-246-789-00	CARBON	3.3K		1/8W	
R320	1-246-787-00	CARBON	2.2K		1/8W	
R321	1-246-807-00	CARBON	100K		1/8W	
R322	1-246-807-00	CARBON	100K		1/8W	
R323	1-246-787-00	CARBON	2.2K		1/8W	
R324	1-246-787-00	CARBON	2.2K		1/8W	
R325	1-246-807-00	CARBON	100K		1/8W	
R326	1-246-807-00	CARBON	100K		1/8W	
R327	1-246-787-00	CARBON	2.2K		1/8W	
R328	1-246-793-00	CARBON	6.8K		1/8W	
R329	1-246-791-00	CARBON	4.7K		1/8W	
R330	1-246-791-00	CARBON	4.7K		1/8W	
R331	1-246-791-00	CARBON	4.7K		1/8W	
R332	1-246-797-00	CARBON	15K		1/8W	
R333⚠	1-247-587-00	CARBON	0.47	5%	1/4W	
R334	1-246-795-00	CARBON	10K		1/8W	
R335	1-206-640-00	METAL	100	5%	2W	F
R336	1-206-640-00	METAL	100	5%	2W	F
R337	1-246-794-00	CARBON	8.2K		1/8W	

CRYSTAL

X101	1-527-532-31	OSCILLATOR, CERAMIC
X201	1-527-532-31	OSCILLATOR, CERAMIC

****

♦:1-605-575-00 TU-22 BOARD
****

****

♦:A-6721-086-A TU-21 BOARD, COMPLETE
****

♦	1-555-716-00	CABLE, PIN
	1-555-798-00	CORD (WITH DC PLUG)
♦	3-671-841-00	CASE (1) (MAIN), SHIELD, TU
♦	3-671-842-00	LID, CASE (1), SHIELD, TU
♦	3-671-843-00	LID, REAR, CASE (1), SHIELD, TU
♦	3-671-844-00	CASE (2) (MAIN), SHIELD, TU
♦	3-671-845-00	LID, CASE (2), SHIELD, TU
♦	3-671-846-00	LID, REAR, CASE (2), SHIELD, TU
♦	3-671-847-00	CASE (3) (MAIN), SHIELD, TU
♦	3-671-848-00	LID, CASE (3), SHIELD, TU
♦	3-671-849-00	LID, REAR, CASE (3), SHIELD, TU

BATTERY

BT491	1-528-074-00	BATTERY, NICKEL CADMIUM	

CAPACITOR

C064	1-123-330-00	ELECT	22MF	20%	16V
C101	1-102-074-00	CERAMIC	0.001MF	10%	50V
C102	1-123-380-00	ELECT	1MF	20%	50V
C103	1-102-121-00	CERAMIC	0.0022MF	10%	50V
C104	1-102-074-00	CERAMIC	0.001MF	10%	50V
C105	1-102-513-00	CERAMIC	18PF	5%	50V
C106	1-102-074-00	CERAMIC	0.001MF	10%	50V
C107	1-123-330-00	ELECT	22MF	20%	16V
C108	1-123-333-00	ELECT	100MF	20%	16V
C109	1-108-242-00	MYLAR	0.022MF	10%	50V
C110	1-131-404-00	ELECT(SOLID)	0.22MF	10%	25V
C111	1-131-404-00	ELECT(SOLID)	0.22MF	10%	25V
C112	1-102-526-00	CERAMIC	75PF	5%	50V
C113	1-101-004-00	CERAMIC	0.01MF		50V
C114	1-101-884-00	CERAMIC	56PF	5%	50V
C115	1-101-884-00	CERAMIC	56PF	5%	50V
C116	1-102-121-00	CERAMIC	0.0022MF	10%	50V
C117	1-102-953-00	CERAMIC	18PF	5%	50V
C119	1-123-333-00	ELECT	100MF	20%	16V
C120	1-123-330-00	ELECT	22MF	20%	16V
C121	1-108-567-00	MYLAR	0.0033MF	5%	50V
C122	1-123-328-00	ELECT	4.7MF	20%	25V
C123	1-123-330-00	ELECT	22MF	20%	16V
C124	1-102-960-00	CERAMIC	24PF	5%	50V
C125	1-102-971-00	CERAMIC	82PF	5%	50V
C126	1-161-059-00	CERAMIC	0.047MF	10%	50V
C127	1-102-526-00	CERAMIC	75PF	5%	50V
C128	1-123-330-00	ELECT	22MF	20%	16V
C129	1-123-380-00	ELECT	1MF	20%	50V
C130	1-108-583-00	MYLAR	0.015MF	5%	50V
C131	1-123-379-00	ELECT	0.47MF	20%	50V
C132	1-102-074-00	CERAMIC	0.001MF	10%	50V
C151	1-123-839-00	ELECT	1000MF	20%	16V
C152	1-123-330-00	ELECT	22MF	20%	16V
C153	1-123-330-00	ELECT	22MF	20%	16V
C155	1-130-495-00	MYLAR	0.1MF	5%	50V
C156	1-123-330-00	ELECT	22MF	20%	16V
C157	1-123-330-00	ELECT	22MF	20%	16V
C201	1-101-004-00	CERAMIC	0.01MF		50V
C202	1-123-330-00	ELECT	22MF	20%	16V

NOTE:

The components identified by shading and mark ⚠ are critical for safety. Replace only with part number specified.

Les composants identifiés par une trame et une marque ⚠ sont critiques pour la sécurité. Ne les remplacer que par une pièce portant le numéro spécifié.

When indicating parts by reference number, please include the board name.

- =>: Oue to standardization, interchangeable replacements may be substituted for parts specified in the diagrams.
- Items marked " ♦ " are not stocked since they are seldom required for routine service. Some delay should be anticipated when ordering these items.

- All variable and adjustable resistors have characteristic curve B, unless otherwise noted.

CAPACITORS
- MF : μF, PF : μμF

RESISTORS
- All resistors are in ohms
- F : nonflammable

COILS
- MMH : mH, UH : μH

TU-21 BOARD

Ref.No	Part No	Description			Remark
C203	1-161-059-00	CERAMIC	0.047MF	10%	50V
C204	1-123-379-00	ELECT	0.47MF	20%	50V
C205	1-102-973-00	CERAMIC	100PF	5%	50V
C206	1-108-555-00	MYLAR	0.001MF	5%	50V
C207	1-108-555-00	MYLAR	0.001MF	5%	50V
C208	1-108-559-00	MYLAR	0.0015MF	5%	50V
C209	1-123-381-00	ELECT	2.2MF	20%	50V
C210	1-102-973-00	CERAMIC	100PF	5%	50V
C211	1-102-959-00	CERAMIC	22PF	5%	50V
C212	1-130-499-51	MYLAR	0.22MF	5%	50V
C214	1-130-489-51	MYLAR	0.033MF	5%	50V
C217	1-130-483-51	MYLAR	0.01MF	5%	50V
C219	1-123-321-00	ELECT	220MF	20%	16V
C221	1-102-973-00	CERAMIC	100PF	5%	50V
C421	1-101-004-00	CERAMIC	0.01MF		50V
C422	1-123-252-00	ELECT	1MF		160V
C423	1-123-383-00	ELECT	4.7MF	20%	100V
C424	1-123-369-00	ELECT	4.7MF	20%	50V
C425	1-106-367-00	MYLAR	0.01MF	5%	200V
C426	1-123-622-00	ELECT	22MF	20%	16V
C427	1-161-059-00	CERAMIC	0.047MF	10%	50V
C428	1-161-059-00	CERAMIC	0.047MF	10%	50V
C429	1-123-622-00	ELECT	22MF	20%	16V

FILTER

CF101	1-409-332-00	CERAMIC TRAP (4.5MHZ)
CF102	1-527-260-00	FILTER, CERAMIC (4.5MHZ)
CF103	1-409-332-00	CERAMIC TRAP (4.5MHZ)

CONNECTOR

CN001♠	1-560-469-00	PIN, CONNECTOR 6P
CN002♠	1-560-468-00	PIN, CONNECTOR 5P
CN004♠	1-560-467-00	PIN, CONNECTOR 4P
CN005♠	1-560-470-00	PIN, CONNECTOR 8P
CN006♠	1-560-467-00	PIN, CONNECTOR 4P
CN007♠	1-560-467-00	PIN, CONNECTOR 4P
CN008♠	1-560-467-00	PIN, CONNECTOR 4P
CN009♠	1-560-472-00	PIN, CONNECTOR 12P
CN010♠	1-560-468-00	PIN, CONNECTOR 5P
CN012♠	1-560-470-00	PIN, CONNECTOR 8P
CN013♠	1-560-468-00	PIN, CONNECTOR 5P

COMPOSITION CIRCUIT BLOCK

CP201	1-232-154-00	COMPOSITION CIRCUIT BLOCK
CP501	1-232-160-00	COMPOSITION CIRCUIT BLOCK
CP502	1-232-160-00	COMPOSITION CIRCUIT BLOCK
CP503	1-232-161-00	COMPOSITION CIRCUIT BLOCK

DIODE

D101	8-719-911-19	DIODE 1SS119
D102	8-719-911-19	DIODE 1SS119
D103	8-719-911-19	DIODE 1SS119
D201	8-719-911-19	DIODE 1SS119
D202	8-719-911-19	DIODE 1SS119
D203	8-719-911-19	DIODE 1SS119
D204	8-719-911-19	DIODE 1SS119
D205	8-719-911-19	DIODE 1SS119
D206	8-719-911-19	DIODE 1SS119
D207	8-719-911-19	DIODE 1SS119
D210	8-719-911-19	DIODE 1SS119
D211	8-719-911-19	DIODE 1SS119
D212	8-719-911-19	DIODE 1SS119
D213	8-719-911-19	DIODE 1SS119
D214	8-719-911-19	DIODE 1SS119
D215	8-719-911-19	DIODE 1SS119
D421	=>8-719-305-15	DIODE GH-3F
D422	8-719-305-15	DIODE GH-3F
D423	8-719-305-15	DIODE GH-3F
D424	8-719-124-07	DIODE RD24E-B
D425	8-719-911-19	DIODE 1SS119
D426	8-719-911-19	DIODE 1SS119
D501	8-719-911-19	DIODE 1SS119
D502	8-719-911-19	DIODE 1SS119
D503	8-719-911-19	DIODE 1SS119
D504	8-719-911-19	DIODE 1SS119
D505	8-719-911-19	DIODE 1SS119
0506	8-719-911-19	DIODE 1SS119
D507	8-719-911-19	DIODE 1SS119
D508	8-719-911-19	DIODE 1SS119
D509	8-719-911-19	DIODE 1SS119
D510	8-719-911-19	DIODE 1SS119
D511	8-719-911-19	DIODE 1SS119
D512	8-719-911-19	DIODE 1SS119
D513	8-719-911-19	DIODE 1SS119
D514	8-719-911-19	DIODE 1SS119

IC

IC101	8-758-851-00	IC CX-885A
IC201	=>8-757-605-00	IC CX-760E
IC202	8-757-611-00	IC CX-761A
IC203	8-758-040-00	IC CX-804
IC204	8-759-157-40	IC UPC574J
IC501	8-759-240-71	IC TC4071BP
IC502	8-759-240-71	IC TC4071BP

COIL

L101	1-408-408-00	MICRO INDUCTOR 8.2UH
L102	1-408-411-00	MICRO INDUCTOR 15UH
L103	1-408-399-00	MICRO INDUCTOR 1.5UH
L104	1-408-403-00	MICRO INDUCTOR 3.3UH
L105	1-408-414-00	MICRO INDUCTOR 27UH
L106	1-408-420-00	MICRO INDUCTOR 82UH
L108	1-408-410-00	MICRO INDUCTOR 12UH
L109	1-407-510-00	MICRO INDUCTOR 33MMH
L110	1-408-421-00	MICRO INDUCTOR 100UH
L201	1-408-421-00	MICRO INDUCTOR 100UH

NOTE:

The components identified by shading and mark ⚠ are critical for safety. Replace only with part number specified.

Les composants identifiés par une trame et une marque ⚠ sont critiques pour la sécurité. Ne les remplacer que par une pièce portant le numéro spécifié.

When indicating parts by reference number, please include the board name.

- =>: Due to standardization, interchangeable replacements may be substituted for parts specified in the diagrams.
- Items marked " ♠ " are not stocked since they are seldom required for routine service. Some delay should be anticipated when ordering these items.
- All variable and adjustable resistors have characteristic curve B, unless otherwise noted.

CAPACITORS
- MF : μF, PF : μμF

RESISTORS
- All resistors are in ohms
- F : nonflammable

COILS
- MMH : mH, UH : μH

Ref.No	Part No	Description	Remark
L421	1-408-421-00	MICRO INOUCTOR 100UH	
		CONNECTOR	
PJ101♦	1-526-575-00	SOCKET, PLUG	
PJ102♦	1-526-575-00	SOCKET, PLUG	
		TRANSISTOR	
Q053	8-729-178-54	TRANSISTOR 2SC2785	
Q101	8-729-178-54	TRANSISTOR 2SC2785	
Q103	8-729-178-54	TRANSISTOR 2SC2785	
Q104	8-729-178-54	TRANSISTOR 2SC2785	
Q105	8-729-117-54	TRANSISTOR 2SA1175	
Q106	8-729-117-54	TRANSISTOR 2SA1175	
Q151	8-729-178-54	TRANSISTOR 2SC2785	
Q201	8-729-178-54	TRANSISTOR 2SC2785	
Q202	8-729-178-54	TRANSISTOR 2SC2785	
Q203	8-729-178-54	TRANSISTOR 2SC2785	
Q204	8-729-178-54	TRANSISTOR 2SC2785	
Q205	8-729-178-54	TRANSISTOR 2SC2785	
Q206	8-729-178-54	TRANSISTOR 2SC2785	
Q207	8-729-178-54	TRANSISTOR 2SC2785	
Q208	8-729-139-04	TRANSISTOR 2N3904	
Q209	8-724-375-01	TRANSISTOR 2SC403C	
Q213	8-729-117-54	TRANSISTOR 2SA1175	
Q214	8-729-117-54	TRANSISTOR 2SA1175	
Q215	8-729-117-54	TRANSISTOR 2SA1175	
Q216	8-729-178-54	TRANSISTOR 2SC2785	
Q401	8-729-178-54	TRANSISTOR 2SC2785	
Q402	8-729-117-54	TRANSISTOR 2SA1175	
Q403	8-729-178-54	TRANSISTOR 2SC2785	
Q405	8-729-178-54	TRANSISTOR 2SC2785	
Q406	8-729-117-54	TRANSISTOR 2SA1175	
Q421	8-729-177-43	TRANSISTOR 2SD774	
Q422	8-729-194-12	TRANSISTOR 2SC1941	
Q501	8-729-178-54	TRANSISTOR 2SC2785	
Q502	8-729-117-54	TRANSISTOR 2SA1175	
		RESISTOR	
R060	1-246-789-00	CARBON 3.3K 1/8W	
R061	1-246-783-00	CARBON 1K 1/8W	
R062	1-246-848-00	CARBON 2.4K 1/8W	
R063	1-246-791-00	CARBON 4.7K 1/8W	
R101	1-246-787-00	CARBON 2.2K 1/8W	
R102	1-246-790-00	CARBON 3.9K 1/8W	
R103	1-246-787-00	CARBON 2.2K 1/8W	
R104	1-246-800-00	CARBON 27K 1/8W	
R105	1-246-785-00	CARBON 1.5K 1/8W	
R106	1-246-790-00	CARBON 3.9K 1/8W	
R107	1-246-789-00	CARBON 3.3K 1/8W	
R108	1-246-783-00	CARBON 1K 1/8W	
R109	1-246-804-00	CARBON 56K 1/8W	
R110	1-246-807-00	CARBON 100K 1/8W	
R111	1-246-802-00	CARBON 39K 1/8W	

Ref.No	Part No	Description			Remark
R112	1-246-782-00	CARBON	820	1/8W	
R113	1-247-047-00	CARBON	330K	1/8W	
R114	1-246-777-00	CARBON	330	1/8W	
R115	1-246-850-00	CARBON	3.6K	1/8W	
R116	1-246-850-00	CARBON	3.6K	1/8W	
R119	1-246-778-00	CARBON	390	1/8W	
R121	1-246-776-00	CARBON	270	1/8W	
R122	1-246-807-00	CARBON	100K	1/8W	
R123	1-246-786-00	CARBON	1.8K	1/8W	
R124	1-246-776-00	CARBON	270	1/8W	
R125	1-246-852-00	CARBON	5.1K	1/8W	
R126	1-246-795-00	CARBON	10K	1/8W	
R127	1-246-787-00	CARBON	2.2K	1/8W	
R128	1-246-789-00	CARBON	3.3K	1/8W	
R129⚠	1-247-107-00	CARBON	100 5%	1/4W	F
R130	1-246-783-00	CARBON	1K	1/8W	
R131	1-246-786-00	CARBON	1.8K	1/8W	
R132	1-246-791-00	CARBON	4.7K	1/8W	
R133	1-246-779-00	CARBON	470	1/8W	
R134	1-246-807-00	CARBON	100K	1/8W	
R135	1-246-777-00	CARBON	330	1/8W	
R151	1-246-807-00	CARBON	100K	1/8W	
R153	1-246-799-00	CARBON	22K	1/8W	
R154⚠	1-247-082-00	CARBON	8.2 5%	1/4W	F
R201	1-246-783-00	CARBON	1K	1/8W	
R203	1-246-803-00	CARBON	47K	1/8W	
R204	1-246-796-00	CARBON	12K	1/8W	
R205	1-246-801-00	CARBON	33K	1/8W	
R206	1-246-803-00	CARBON	47K	1/8W	
R207	1-246-806-00	CARBON	82K	1/8W	
R208	1-246-795-00	CARBON	10K	1/8W	
R209	1-246-799-00	CARBON	22K	1/8W	
R210	1-246-795-00	CARBON	10K	1/8W	
R211	1-246-795-00	CARBON	10K	1/8W	
R212	1-246-859-00	CARBON	20K	1/8W	
R213	1-246-795-00	CARBON	10K	1/8W	
R214	1-246-795-00	CARBON	10K	1/8W	
R215	1-246-859-00	CARBON	20K	1/8W	
R216	1-246-795-00	CARBON	10K	1/8W	
R217	1-246-795-00	CARBON	10K	1/8W	
R218	1-246-811-00	CARBON	220K	1/8W	
R219	1-246-795-00	CARBON	10K	1/8W	
R220	1-246-795-00	CARBON	10K	1/8W	
R221	1-244-885-00	CARBON	3.3K 5%	1/2W	
R222	1-246-795-00	CARBON	10K	1/8W	
R223	1-246-801-00	CARBON	33K	1/8W	
R224	1-246-806-00	CARBON	82K	1/8W	
R225	1-246-783-00	CARBON	1K	1/8W	
R226	1-246-807-00	CARBON	100K	1/8W	
R227	1-246-811-00	CARBON	220K	1/8W	
R228	1-244-873-00	CARBON	1K 5%	1/2W	
R229	1-246-795-00	CARBON	10K	1/8W	
R230	1-247-047-00	CARBON	330K	1/8W	

NOTE:

The components identified by shading and mark ⚠ are critical for safety. Replace only with part number specified.

Les composants identifiés par une trame et une marque ⚠ sont critiques pour la sécurité. Ne les remplacer que par une pièce portant le numéro spécifié.

When indicating parts by reference number, please include the board name.

- =>: Oue to standardization, interchangeable replacements may be substituted for parts specified in the diagrams.
- Items marked " ♦ " are not stocked since they are seldom required for routine service. Some delay should be anticipated when ordering these items.
- All variable and adjustable resistors have characteristic curve B, unless otherwise noted.

CAPACITORS
- MF : μF, PF : μμF

RESISTORS
- All resistors are in ohms
- F : nonflammable

COILS
- MMH : mH, UH : μH

TU-21 BOARD | SW-12 BOARD

Ref.No	Part No	Description			Remark
R231	1-246-801-00	CARBON	33K	1/8W	
R232	1-246-777-00	CARBON	330	1/8W	
R233	1-246-783-00	CARBON	1K	1/8W	
R234	1-246-799-00	CARBON	22K	1/8W	
R235	1-246-795-00	CARBON	10K	1/8W	
R236	1-246-795-00	CARBON	10K	1/8W	
R237	1-246-807-00	CARBON	100K	1/8W	
R238	1-246-795-00	CARBON	10K	1/8W	
R239	1-246-795-00	CARBON	10K	1/8W	
R241	1-246-798-00	CARBON	18K	1/8W	
R242	1-246-788-00	CARBON	2.7K	1/8W	
R243	1-246-475-00	CARBON	1.2K 5%	1/4W	
R244	1-246-801-00	CARBON	33K	1/8W	
R245	1-202-667-00	COMPOSITION	8.2M 5%	1/2W	
R247	1-246-805-00	CARBON	68K	1/8W	
R249	1-246-521-00	CARBON	100K 5%	1/4W	
R259	1-246-807-00	CARBON	100K	1/8W	
R260	1-246-807-00	CARBON	100K	1/8W	
R261	1-246-799-00	CARBON	22K	1/8W	
R262	1-246-787-00	CARBON	2.2K	1/8W	
R263	1-246-799-00	CARBON	22K	1/8W	
R264	1-246-787-00	CARBON	2.2K	1/8W	
R265	1-246-799-00	CARBON	22K	1/8W	
R267	1-246-807-00	CARBON	100K	1/8W	
R269	1-246-787-00	CARBON	2.2K	1/8W	
R275	1-246-795-00	CARBON	10K	1/8W	
R276	1-246-789-00	CARBON	3.3K	1/8W	
R277	1-246-794-00	CARBON	8.2K 5%	1/8W	
R277	1-247-053-00	CARBON	1M	1/8W	
R278	1-246-805-00	CARBON	68K	1/8W	
R401	1-246-852-00	CARBON	5.1K	1/8W	
R402	1-246-795-00	CARBON	10K	1/8W	
R407	1-246-795-00	CARBON	10K	1/8W	
R408	1-246-795-00	CARBON	10K	1/8W	
R421	1-246-783-00	CARBON	1K	1/8W	
R422	1-246-775-00	CARBON	220	1/8W	
R423	1-244-909-00	CARBON	33K 5%	1/2W	
R424	1-244-905-00	CARBON	22K 5%	1/2W	
R425	1-246-795-00	CARBON	10K	1/8W	
R426	1-246-795-00	CARBON	10K	1/8W	
R427	1-246-787-00	CARBON	2.2K	1/8W	
R428	1-246-801-00	CARBON	33K	1/8W	
R429	1-247-047-00	CARBON	330K 5%	1/8W	
R491 ⚠	1-212-850-00	FUSIBLE	5.1 5%	1/4W	F
R501	1-246-803-00	CARBON	47K	1/8W	
R502	1-246-803-00	CARBON	47K	1/8W	
R503	1-246-795-00	CARBON	10K	1/8W	
R504	1-246-801-00	CARBON	33K	1/8W	
R505	1-246-803-00	CARBON	47K	1/8W	
R506	1-246-803-00	CARBON	47K	1/8W	
R507	1-246-788-00	CARBON	2.7K	1/8W	

Ref.No	Part No	Description	Remark
		RF UNIT	
RF101	1-464-151-00	UNIT, COLOR RF (RF-7W(M))	
		VARIABLE RESISTOR	
RV101	1-224-251-XX	RES, ADJ, METAL GLAZE 4.7K	
RV102	1-224-251-XX	RES, ADJ, METAL GLAZE 4.7K	
		FILTER	
SF101	1-404-227-41	SAWF	
		TRANSFORMER	
T101	1-404-153-00	VIFT	
T102	1-404-321-00	VIFT	
T103	1-404-352-00	COIL, VIF	
T104	1-404-318-00	SIFT	
T105	1-404-352-00	COIL, VIF	
T201	1-409-193-00	COIL 3.58MHZ TRAP	
T421	1-421-436-00	TRANSFORMER, FERRITE	
		THERMISTOR	
TH101	1-800-626-00	THERMISTOR	
		TUNER	
TU101	1-463-377-00	TUNER (BT-864)	
**********			
♦	1-605-410-00	SW-12 BOARD **********	
	3-701-822-00	HOLDER, WIRE	
		DIODE	
D501	8-719-911-06	DIODE 1SS106	
D502	8-719-911-06	DIODE 1SS106	
D503	8-719-911-06	DIODE 1SS106	
D504	8-719-168-07	DIODE RD6.8E-B	
D505	8-719-168-07	DIODE RD6.8E-B	
		VARIABLE RESISTOR	
RV501	1-228-244-00	RES, VAR, SOLID 100K	
RV502	1-228-359-00	RES, VAR, SOLID 5K	
		SWITCH	
S501	1-553-766-00	SWITCH, KEY BOARD	
S502	1-553-766-00	SWITCH, KEY BOARD	
S503	1-553-716-00	SWITCH, SLIDE	
S504	1-553-754-00	SWITCH, SLIDE	

NOTE:

The components identified by shading and mark ⚠ are critical for safety. Replace only with part number specified.

Les composants identifiés par une trame et une marque ⚠ sont critiques pour la sécurité. Ne les remplacer que par une pièce portant le numéro spécifié.

When indicating parts by reference number, please include the board name.

- =>: Due to standardization, interchangeable replacements may be substituted for parts specified in the diagrams.
- Items marked " ♦ " are not stocked since they are seldom required for routine service. Some delay should be anticipated when ordering these items.
- All variable and adjustable resistors have characteristic curve B, unless otherwise noted.

CAPACITORS
- MF : μF, PF : μμF

RESISTORS
- All resistors are in ohms
- F : nonflammable

COILS
- MMH : mH, UH : μH

CH-22 BOARD | **CH-21 BOARD** | **CI-3 BOARD**

CI-2 BOARD | **RL-4 BOARD** | **LM-9 BOARD** | **LM-8 BOARD**

Ref.No	Part No	Description			Remark
	A-6728-243-A	LM-8 BOARD, COMPLETE **********			
		CAPACITOR			
C101	1-161-057-00	CERAMIC	0.033MF	10% 50V	
C102	1-161-057-00	CERAMIC	0.033MF	10% 50V	
		COIL			
L101	1-408-120-00	MICRO INDUCTOR 18UH			
L102	1-408-120-00	MICRO INDUCTOR 18UH			
**********					
	1-605-109-00	LM-9 BOARD **********			
		CAPACITOR			
C001	1-161-057-00	CERAMIC	0.033MF	10% 50V	
C002	1-161-057-00	CERAMIC	0.033MF	10% 50V	
		DIODE			
D001	8-719-911-06	DIODE 1SS106			
D002	8-719-911-06	DIODE 1SS106			
D003	8-719-911-06	DIODE 1SS106			
		COIL			
L001	1-407-696-00	MICRO INDUCTOR 18UH			
L002	1-407-696-00	MICRO INDUCTOR 18UH			
		SWITCH			
S001	1-552-664-00	SWITCH, MICRO			
**********					
	♦:1-605-110-00	RL-4 BOARD **********			
**********					
	A-6728-248-A	CI-2 BOARD, COMPLETE **********			
	1-553-719-00	SWITCH, MICRO			
	♦:3-670-039-00	HOLDER (R), CSW			
**********					
	A-6728-249-A	CI-3 BOARD, COMPLETE **********			
	1-553-719-00	SWITCH, MICRO			
	♦:3-670-038-00	HOLDER (L), CSW			

Ref.No	Part No	Description			Remark
	1-605-581-00	CH-21 BOARD **********			
	♦:3-662-227-00	HOLDER (R-3), LED			
		CAPACITOR			
C701	1-161-021-00	CERAMIC	0.047MF	10% 25V	
		DIODE			
D751	8-719-812-31	DIODE TLR123			
D752	8-719-812-32	DIODE TLY123			
D753	8-719-812-33	DIODE TLG123			
D754	8-719-911-19	DIODE 1SS119			
D755	8-719-812-31	DIODE TLR123			
D756	8-719-812-31	DIODE TLR123			
D757	8-719-812-31	DIODE TLR123			
D758	8-719-812-31	DIODE TLR123			
D759	8-719-812-31	DIODE TLR123			
		IC			
IC701	8-759-619-03	IC M51903L			
		RESISTOR			
R752	1-246-782-00	CARBON	820	1/8W	
R753	1-246-783-00	CARBON	1K	1/8W	
R754	1-246-795-00	CARBON	10K	1/8W	
R755	1-246-787-00	CARBON	2.2K	1/8W	
R756	1-246-787-00	CARBON	2.2K	1/8W	
R757	1-246-787-00	CARBON	2.2K	1/8W	
R758	1-246-787-00	CARBON	2.2K	1/8W	
R759	1-246-787-00	CARBON	2.2K	1/8W	
		SWITCH			
S751	1-553-766-00	SWITCH, KEY BOARD			
S752	1-553-766-00	SWITCH, KEY BOARD			
S753	1-553-766-00	SWITCH, KEY BOARD			
S754	1-553-716-00	SWITCH, SLIDE			
S755	1-553-716-00	SWITCH, SLIDE			
**********					
	1-605-895-00	CH-22 BOARD **********			
		NEON LAMP			
NL701	1-519-204-00	LAMP, NEON			
NL702	1-519-204-00	LAMP, NEON			
NL703	1-519-204-00	LAMP, NEON			
NL704	1-519-204-00	LAMP, NEON			
NL705	1-519-204-00	LAMP, NEON			
NL706	1-519-204-00	LAMP, NEON			
NL707	1-519-204-00	LAMP, NEON			
NL708	1-519-204-00	LAMP, NEON			
NL709	1-519-204-00	LAMP, NEON			

NOTE:

The components identified by shading and mark ⚠ are critical for safety. Replace only with part number specified.

Les composants identifiés par une trame et une marque ⚠ sont critiques pour la sécurité. Ne les remplacer que par une pièce portant le numéro spécifié.

When indicating parts by reference number, please include the board name.

- =>: Due to standardization, interchangeable replacements may be substituted for parts specified in the diagrams.
- Items marked " ♦ " are not stocked since they are seldom required for routine service. Some delay should be anticipated when ordering these items.
- All variable and adjustable resistors have characteristic curve B, unless otherwise noted.

CAPACITORS
- MF : μF, PF : μμF

RESISTORS
- All resistors are in ohms
- F : nonflammable

COILS
- MMH : mH, UH : μH

CH-22 BOARD | RL-7 BOARD | N BOARD | TIMER BLOCK

Ref.No	Part No	Description	Remark
NL710	1-519-204-00	LAMP, NEON	
NL711	1-519-204-00	LAMP, NEON	
NL712	1-519-204-00	LAMP, NEON	
NL713	1-519-204-00	LAMP, NEON	
NL714	1-519-204-00	LAMP, NEON	
		SWITCH	
S701	1-553-766-00	SWITCH, KEY BOARD	
S702	1-553-766-00	SWITCH, KEY BOARD	
S703	1-553-766-00	SWITCH, KEY BOARD	
S704	1-553-766-00	SWITCH, KEY BOARD	
S705	1-553-766-00	SWITCH, KEY BOARD	
S706	1-553-766-00	SWITCH, KEY BOARD	
S707	1-553-766-00	SWITCH, KEY BOARD	
S708	1-553-766-00	SWITCH, KEY BOARD	
S709	1-553-766-00	SWITCH, KEY BOARD	
S710	1-553-766-00	SWITCH, KEY BOARD	
S711	1-553-766-00	SWITCH, KEY BOARD	
S712	1-553-766-00	SWITCH, KEY BOARD	
S713	1-553-766-00	SWITCH, KEY BOARD	
S714	1-553-766-00	SWITCH, KEY BOARD	
**********			
♦	1-606-001-00	RL-7 BOARD **********	
♦	3-670-167-00	INSULATOR	
		CONNECTOR	
CN001	♦:1-560-472-00	PIN, CONNECTOR 12P	
CN002	♦:1-560-470-00	PIN, CONNECTOR 8P	
		DIODE	
D201	8-719-911-06	DIODE 1SS106	
D202	8-719-911-06	DIODE 1SS106	
D203	8-719-911-06	DIODE 1SS106	
**********			
	1-603-976-00	N BOARD *******	
	1-232-004-00	COMPOSITION CIRCUIT BLOCK	
♦	4-348-551-00	PLATE, SHIELD	
		CAPACITOR	
C001	1-123-617-00	ELECT 10MF 20% 16V	
C002	1-123-617-00	ELECT 10MF 20% 16V	
C003	1-123-617-00	ELECT 10MF 20% 16V	
C004	1-161-019-00	CERAMIC 0.033MF 10% 25V	
C005	1-108-567-00	MYLAR 0.0033MF 5% 50V	
		DIODE	
D001	=>8-719-110-32	DIODE PH302B	

Ref.No	Part No	Description	Remark
		IC	
IC001	8-759-113-73	IC UPC1373H	
		COIL	
L001	1-404-310-00	COIL	
**********			
	1-548-552-00	TIMER BLOCK **********	
	9-982-255-00	FLOURECENT DISPLAY	
		CAPACITOR	
C1	1-123-333-00	ELECT 100MF 20% 25V	
C2	1-101-006-00	CERAMIC 0.047MF Z% 50V	
C3	1-102-074-00	CERAMIC 0.001MF 10% 50V	
C4	1-123-359-00	ELECT 47MF 20% 50V	
C5	1-102-074-00	CERAMIC 0.001MF 10% 50V	
C6	1-123-306-00	ELECT 47MF 20% 10V	
C7	1-123-381-00	ELECT 2.2MF 20% 100V	
C8	1-102-121-00	CERAMIC 0.0022MF 10% 50V	
C9	1-123-306-00	ELECT 47MF 20% 10V	
C10	1-123-382-00	ELECT 3.3MF 20% 100V	
C11	1-102-508-00	CERAMIC 10PF 5% 50V	
C12	9-982-056-00	TRIMMER 4PF TO 28PF	
C13	1-123-382-00	ELECT 3.3MF 20% 50V	
C15	1-102-129-00	CERAMIC 0.01MF 10% 50V	
C16	1-102-038-00	CERAMIC 0.001MF 500V	
C17	1-101-006-00	CERAMIC 0.047MF Z% 50V	
C18	1-102-038-00	CERAMIC 0.001MF 500V	
		COMPOSITION CIRCUIT BLOCK	
CP1	9-982-069-00	COMPOSITION CIRCUIT BLOCK 220Kx4	
		DIODE	
D1	8-719-911-19	DIODE 1SS119	
D2	8-719-100-29	DIODE RD5.1EB1	
D3	8-719-106-07	DIODE RD36E-B	
D4	8-719-911-19	DIODE 1SS119	
D5	8-719-100-29	DIODE RD5.1EB1	
D6	8-719-911-19	DIODE 1SS119	
D7	8-719-911-19	DIODE 1SS119	
D8	8-719-100-31	DIODE RD5.1EB3	
D9	8-719-911-19	DIODE 1SS119	
D10	8-719-100-22	DIODE RD4.3EB1	
D11	9-982-258-00	DIODE TLS-123	
D12	8-719-911-19	DIODE 1SS119	
D13	8-719-911-19	DIODE 1SS119	
D15	8-719-911-19	DIODE 1SS119	
D16	8-719-911-19	DIODE 1SS119	
D17	8-719-911-19	DIODE 1SS119	

NOTE:

The components identified by shading and mark ⚠ are critical for safety. Replace only with part number specified.

Les composants identifiés par une trame et une marque ⚠ sont critiques pour la sécurité. Ne les remplacer que par une pièce portant le numéro spécifié.

When indicating parts by reference number, please include the board name.

- =>: Due to standardization, interchangeable replacements may be substituted for parts specified in the diagrams.
- Items marked " ♦ " are not stocked since they are seldom required for routine service. Some delay should be anticipated when ordering these items.
- All variable and adjustable resistors have characteristic curve B, unless otherwise noted.

CAPACITORS
- MF : μF, PF : μμF

RESISTORS
- All resistors are in ohms
- F : nonflammable

COILS
- MMH : mH, UH : μH

POWER BLOCK **TIMER BLOCK**

Ref.No	Part No	Description	Remark
D18	8-719-911-19	DIODE 1SS119	
D19	8-719-911-19	DIODE 1SS119	
D20	8-719-911-19	DIODE 1SS119	
D21	8-719-911-19	DIODE 1SS119	
D22	8-719-911-19	DIODE 1SS119	
D23	8-719-911-19	DIODE 1SS119	
		IC	
IC1	9-982-051-00	IC MSL915RS	
IC2	9-982-051-00	IC MSL915RS	
IC3	9-982-051-00	IC MSL915RS	
IC4	9-982-071-00	IC MB8845-495M	
		COIL	
L1	9-982-059-00	MICRO INDUCTOR 100UH	
		TRANSISTOR	
Q1	8-764-803-00	TRANSISTOR 2SC1816-3	
Q2	8-763-314-00	TRANSISTOR 2SC1760-14	
Q3	8-763-314-00	TRANSISTOR 2SC1760-14	
Q4	8-729-853-63	TRANSISTOR 2SC536SP	
Q5	8-729-853-63	TRANSISTOR 2SC536SP	
Q6	8-729-853-63	TRANSISTOR 2SC536SP	
Q7	8-729-853-63	TRANSISTOR 2SC536SP	
Q8	8-729-853-63	TRANSISTOR 2SC536SP	
Q9	8-729-853-63	TRANSISTOR 2SC536SP	
		RESISTOR	
R1	1-246-485-00	CARBON 3.3K 5% 1/4W	
R2	1-246-449-00	CARBON 100 5% 1/4W	
R3	1-246-489-00	CARBON 4.7K 5% 1/4W	
R4	1-246-469-00	CARBON 680 5% 1/4W	
R5	1-246-473-00	CARBON 1K 5% 1/4W	
R6	1-246-453-00	CARBON 150 5% 1/4W	
R7	1-246-433-00	CARBON 22 5% 1/4W	
R8	1-246-473-00	CARBON 1K 5% 1/4W	
R9	1-246-513-00	CARBON 47K 5% 1/4W	
R10	1-246-513-00	CARBON 47K 5% 1/4W	
R11	1-246-459-00	CARBON 270 5% 1/4W	
R12	1-246-465-00	CARBON 470 5% 1/4W	
R13	1-246-521-00	CARBON 100K 5% 1/4W	
R14	1-246-521-00	CARBON 100K 5% 1/4W	
R15	1-246-482-00	CARBON 2.4K 5% 1/4W	
R16	9-982-057-00	SOLID 10M 5% 1/4W	
R17	1-246-513-00	CARBON 47K 5% 1/4W	
R18	1-246-481-00	CARBON 2.2K 5% 1/4W	
R19	1-246-451-00	CARBON 120 5% 1/4W	
R20	1-246-513-00	CARBON 47K 5% 1/4W	
R21	1-246-513-00	CARBON 47K 5% 1/4W	
R22	1-246-485-00	CARBON 3.3K 5% 1/4W	
R23	1-246-485-00	CARBON 3.3K 5% 1/4W	
R24	1-212-849-00	FUSIBLE 4.7 5% 1/4W	F

Ref.No	Part No	Description	Remark
		SWITCH	
S1	1-553-766-00	SWITCH, KEY BOARD	
S2	1-553-766-00	SWITCH, KEY BOARD	
S3	1-553-766-00	SWITCH, KEY BOARD	
S4	1-553-766-00	SWITCH, KEY BOARD	
S5	1-553-766-00	SWITCH, KEY BOARD	
S6	1-553-766-00	SWITCH, KEY BOARD	
S7	1-553-716-00	SWITCH, SLIDE	
S8	1-553-716-00	SWITCH, SLIDE	
		TRANSFORMER	
T1	9-982-073-00	TRANSFORMER, CONVERTER	
T2	9-982-074-00	TRANSFORMER, CONVERTER	
**********			
⚠	.1-413-081-11	POWER BLOCK (SR-11A) **********	
⚠	.1-551-964-00	CORD, POWER	
⚠	.1-561-347-00	SOCKET, AC	
		CAPACITOR	
C1	⚠ .1-130-680-00	POLYPRO 0.1MF 20% 125V	
C2	⚠ .1-130-680-00	POLYPRO 0.1MF 20% 125V	
C3	⚠ .1-161-747-00	CERAMIC 0.0022MF 20% 125V	
C4	⚠ .1-161-747-00	CERAMIC 0.0022MF 20% 125V	
C5	⚠ .1-161-747-00	CERAMIC 0.0022MF 20% 125V	
C6	⚠ .1-123-665-00	ELECT 330MF 20% 200V	
C7	⚠ .1-123-580-00	ELECT 4.7MF 20% 350V	
C8	⚠ .1-123-580-00	ELECT 4.7MF 20% 350V	
C9	⚠ .1-123-336-00	ELECT 470MF 20% 25V	
C10	⚠ .1-106-188-00	MYLAR 0.0047MF 5% 100V	
C11	⚠ .1-106-180-00	MYLAR 0.0022MF 5% 100V	
C12	⚠ .1-106-180-00	MYLAR 0.0022MF 5% 100V	
C13	⚠ .9-982-264-00	POLYPRO 0.0047MF 5% 100V	
C14	⚠ .1-106-188-00	MYLAR 0.0047MF 5% 100V	
C15	⚠ .1-106-188-00	MYLAR 0.0047MF 5% 100V	
C16	⚠ .1-108-595-00	MYLAR 0.047MF 5% 50V	
C17	⚠ .9-982-187-00	ELECT 2200MF 20% 16V	
C18	⚠ .1-123-335-00	ELECT 330MF 20% 25V	
C20	⚠ .1-123-323-00	ELECT 470MF 20% 16V	
C21	⚠ .1-108-595-00	MYLAR 0.047MF 5% 50V	
C22	⚠ .9-982-188-00	ELECT 100MF 20% 16V	
C23	⚠ .1-108-587-00	MYLAR 0.022MF 5% 50V	
C24	⚠ .1-123-323-00	ELECT 470MF 20% 16V	
C25	⚠ .1-123-333-00	ELECT 100MF 20% 25V	
C26	⚠ .1-123-356-00	ELECT 10MF 20% 50V	
C27	⚠ .1-123-332-00	ELECT 47MF 20% 25V	
C28	⚠ .1-123-318-00	ELECT 33MF 20% 16V	
C29	⚠ .1-161-747-00	CERAMIC 0.0022MF 20% 125V	
C30	⚠ .1-108-579-00	MYLAR 0.01MF 5% 50V	
C31	⚠ .1-123-380-00	ELECT 1MF 20% 100V	

NOTE:

The components identified by shading and mark ⚠ are critical for safety. Replace only with part number specified.

Les composants identifiés par une trame et une marque ⚠ sont critiques pour la sécurité. Ne les remplacer que par une pièce portant le numéro spécifié.

When indicating parts by reference number, please include the board name.

- =>: Due to standardization, interchangeable replacements may be substituted for parts specified in the diagrams.
- Items marked " ♦ " are not stocked since they are seldom required for routine service. Some delay should be anticipated when ordering these items.
- All variable and adjustable resistors have characteristic curve B, unless otherwise noted.

CAPACITORS
- MF : μF, PF : μμF

RESISTORS
- All resistors are in ohms
- F : nonflammable

COILS
- MMH : mH, UH : μH

POWER BLOCK

Ref.No	Part No	Description				Remark
C32 ⚠	.9-982-191-00	ELECT	22MF	20%	50V	
C33 ⚠	.1-123-380-00	ELECT	1MF	20%	100V	
C34 ⚠	.1-102-114-00	CERAMIC	470PF	10%	50V	
C35 ⚠	.1-106-180-00	MYLAR	0.0022MF	5%	100V	
C36 ⚠	.1-106-180-00	MYLAR	0.0022MF	5%	100V	
C37 ⚠	.1-161-747-00	CERAMIC	0.0022MF	20%	125V	

CONNECTER

CN1	1-560-676-00	PIN, CONNECTOR 3P	

DIODE

D1 ⚠	.8-719-503-40	DIODE S3V40	
D2 ⚠	.8-719-503-40	DIODE S3V40	
D3 ⚠	.8-719-503-40	DIODE S3V40	
D4 ⚠	.8-719-503-40	DIODE S3V40	
D5 ⚠	.8-719-500-01	DIODE S1WB10	
D6 ⚠	.8-719-550-02	DIODE S5KC20	
D7 ⚠	.8-719-923-48	DIODE 1S2348H	
D8 ⚠	.8-719-981-01	DIODE ERA81-004	
D9 ⚠	.8-719-100-72	DIODE RD15EB3	
D10 ⚠	.8-719-815-85	DIODE 1S1585	
D11 ⚠	.8-719-981-01	DIODE ERA81-004	
D12 ⚠	.8-719-815-85	DIODE 1S1585	
D13 ⚠	.8-719-815-85	DIODE 1S1585	

FUSE

F1 ⚠	.1-532-403-XX	FUSE, 3.15A 125V	

IC

IC1 ⚠	.8-759-937-59	IC MB3759	
IC2 ⚠	.8-759-133-90	IC UPC339C	
IC3 ⚠	.8-759-170-08	IC UPC78M08H	

TRANSISTOR

Q1 ⚠	.8-729-925-02	TRANSISTOR 2SC2502	
Q2 ⚠	.8-729-925-02	TRANSISTOR 2SC2502	
Q3 ⚠	.8-729-663-47	TRANSISTOR 2SC1364-7	
Q4 ⚠	.8-729-177-23	TRANSISTOR 2SB772-P	
Q5 ⚠	.8-729-177-23	TRANSISTOR 2SB772-P	

RESISTOR

R1 ⚠	.9-982-261-00	WIREWOUND	1	10%	5W	F
R2 ⚠	.1-244-929-00	CARBON	220K	5%	1/2W	
R3 ⚠	.1-202-727-00	SOLID	4.7M	10%	1/2W	
R4 ⚠	.1-246-441-00	CARBON	47	5%	1/4W	
R5 ⚠	.1-246-441-00	CARBON	47	5%	1/4W	
R6 ⚠	.1-246-483-00	CARBON	2.7K	5%	1/4W	
R7 ⚠	.1-244-841-00	CARBON	47	5%	1/2W	
R8 ⚠	.1-244-835-00	CARBON	27	5%	1/2W	
R9 ⚠	.1-217-596-00	METAL PLATE	0.05	10%	2W	
R10 ⚠	.1-246-491-00	CARBON	5.6K	5%	1/4W	
R11 ⚠	.1-246-529-00	CARBON	220K	5%	1/4W	
R12 ⚠	.1-246-535-00	CARBON	390K	5%	1/4W	
R13 ⚠	.1-246-491-00	CARBON	5.6K	5%	1/4W	
R14 ⚠	.1-246-511-00	CARBON	39K	5%	1/4W	
R15 ⚠	.1-246-493-00	CARBON	6.8K	5%	1/4W	
R16 ⚠	.1-246-483-00	CARBON	2.7K	5%	1/4W	
R17 ⚠	.1-246-489-00	CARBON	4.7K	5%	1/4W	
R18 ⚠	.1-246-487-00	CARBON	3.9K	5%	1/4W	
R19 ⚠	.1-246-481-00	CARBON	2.2K	5%	1/4W	
R20 ⚠	.1-246-491-00	CARBON	5.6K	5%	1/4W	
R21 ⚠	.1-246-521-00	CARBON	100K	5%	1/4W	
R22 ⚠	.1-246-497-00	CARBON	10K	5%	1/4W	
R24 ⚠	.1-246-473-00	CARBON	1K	5%	1/4W	
R25 ⚠	.1-246-489-00	CARBON	4.7K	5%	1/4W	
R26 ⚠	.1-246-491-00	CARBON	5.6K	5%	1/4W	
R27 ⚠	.1-244-853-00	CARBON	150	5%	1/2W	
R28 ⚠	.1-246-501-00	CARBON	15K	5%	1/4W	
R29 ⚠	.1-246-497-00	CARBON	10K	5%	1/4W	
R30 ⚠	.1-246-469-00	CARBON	680	5%	1/4W	
R31 ⚠	.1-246-481-00	CARBON	2.2K	5%	1/4W	
R32 ⚠	.1-246-477-00	CARBON	1.5K	5%	1/4W	
R33 ⚠	.1-246-401-00	CARBON	1	5%	1/4W	
R34 ⚠	.1-246-401-00	CARBON	1	5%	1/4W	
R35 ⚠	.1-246-497-00	CARBON	10K	5%	1/4W	
R36 ⚠	.1-246-497-00	CARBON	10K	5%	1/4W	
R37 ⚠	.1-246-481-00	CARBON	2.2K	5%	1/4W	
R38 ⚠	.1-246-473-00	CARBON	1K	5%	1/4W	
R39 ⚠	.1-246-497-00	CARBON	10K	5%	1/4W	
R40 ⚠	.9-982-262-00	FUSIBLE	3.3	5%	1/2W	F
R41 ⚠	.9-982-185-00	METAL PLATE	1	10%	2W	
R42 ⚠	.9-982-263-00	FUSIBLE	2.2	5%	1/4W	F
R43 ⚠	.1-246-497-00	CARBON	10K	5%	1/4W	
R44 ⚠	.1-244-835-00	CARBON	27	5%	1/2W	
R45 ⚠	.1-244-849-00	CARBON	100	5%	1/2W	

VARIABLE RESISTOR

RV1 ⚠	.1-226-707-00	SOLID 1K
RV2 ⚠	.1-226-707-00	SOLID 1K
RV3 ⚠	.1-226-770-00	METAL GLAZE 470

RELAY

RL1 ⚠	.9-982-184-00	RELAY MR31-12U

TRANSFOMER

T1 ⚠	.1-421-439-00	CHOKE COIL, NORMAL
T2 ⚠	.1-421-439-00	CHOKE COIL, NORMAL
T3 ⚠	.1-421-438-00	CHOKE COIL, COMMON
T4 ⚠	.1-413-073-00	TRANSFORMER, SWITCHING
T5 ⚠	.1-437-097-00	TRANSFORMER, DRIVE
T6 ⚠	.1-447-197-00	TRANSFORMER, AC
T7 ⚠	.9-982-193-00	CHOKE COIL (C)
T8 ⚠	.9-982-194-00	CHOKE CIOL, POWER
T9 ⚠	.9-982-195-00	CHOKE COIL (A)
T10 ⚠	.9-982-196-00	CHOKE COIL (B)

NOTE:

The components identified by shading and mark ⚠ are critical for safety. Replace only with part number specified.

Les composants identifiés par une trame et une marque ⚠ sont critiques pour la sécurité. Ne les remplacer que par une pièce portant le numéro spécifié.

When indicating parts by reference number, please include the board name.

- =>: Due to standardization, interchangeable replacements may be substituted for parts specified in the diagrams.
- Items marked " ♦ " are not stocked since they are seldom required for routine service. Some delay should be anticipated when ordering these items.
- All variable and adjustable resistors have characteristic curve B, unless otherwise noted.

CAPACITORS
- MF : μF, PF : μμF

RESISTORS
- All resistors are in ohms
- F : nonflammable

COILS
- MMH : mH, UH : μH

Ref.No	Part No	Description	Remark
T11 ⚠	.9-982-196-00	CHOKE COIL (B)	
T12 ⚠	.9-982-194-00	CHOKE COIL, POWER	

****

MISCELLANEOUS
****

A-6761-043-A ACE ASSY (M-2)

****

ACCESSORIES AND PACKING MATERIALS
****

Part.No	Description	Remark
A-6701-177-A	COMMANDER ASSY	
1-417-063-00	TRANSFORMER, ANTENNA (EAC-24)	
1-513-379-00	CONVERTER (EAC-25)	
1-551-139-00	CORD, CONNECTION	
1-551-644-41	CORD, CONNECTION	
3-660-986-00	SHEET, PROTECTION	
3-671-402-00	INDICATOR, ACCESSORY	
3-671-832-00	BAG, PROTECTION	
3-671-873-00	CASE, ACCESSORY	
3-674-305-00	CUSHION (LOWER FRONT)	
3-674-306-00	CUSHION (LOWER REAR)	
3-674-307-00	CUSHION (UPPER FRONT)	
3-674-308-00	CUSHION (UPPER REAR)	
3-674-309-00	INDIVIDUAL CARTON	
3-674-317-00	LID, ACCESSORY CASE	
3-703-338-01	LABEL, UL (570F)	
3-783-869-21	MANUAL, INSTRUCTION (US/CANADIAN MODEL)	
3-783-869-31	MANUAL, INSTRUCTION (CANADIAN MODEL)	
3-795-338-21	MANUAL, INSTRUCTION (US/CANADIAN MODEL)	
3-795-338-31	MANUAL, INSTRUCTION (CANADIAN MODEL)	
3-783-869-51	MANUAL, INSTRUCTION (E MODEL)	
3-795-338-51	MANUAL, INSTRUCTION (E MODEL)	
4-491-302-31	CARD, WARRANTY (CANADIAN MODEL)	
4-491-335-21	CARD, WARRANTY (US, E MODEL)	
4-491-336-21	REGISTRATION (US, E MODEL)	

NOTE:

The components identified by shading and mark ⚠ are critical for safety. Replace only with part number specified.

Les composants identifiés par une trame et une marque ⚠ sont critiques pour la sécurité. Ne les remplacer que par une pièce portant le numéro spécifié.

When indicating parts by reference number, please include the board name.

- =>: Due to standardization, interchangeable replacements may be substituted for parts specified in the diagrams.
- Items marked " ♦ " are not stocked since they are seldom required for routine service. Some delay should be anticipated when ordering these items.

- All variable and adjustable resistors have characteristic curve B, unless otherwise noted.

CAPACITORS
- MF : μF, PF : μμF

RESISTORS
- All resistors are in ohms
- F : nonflammable

COILS
- MMH : mH, UH : μH

MEMO

RMT-312

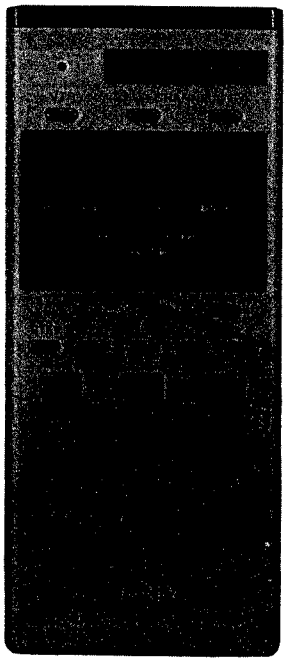

REMOTE CONTROL UNIT

SPECIFICATIONS

Remote control unit	
Remote control system	Infrared control
Power requirements	3V dc, 2 size AA batteries (IEC designation R6)
Dimensions	Approx. 65 × 150 × 16 mm (w/h/d) ($2\frac{5}{8} \times 6 \times \frac{3}{4}$ inches) incl. projecting parts and controls
Weight	Approx. 140 g (5 oz) incl. batteries

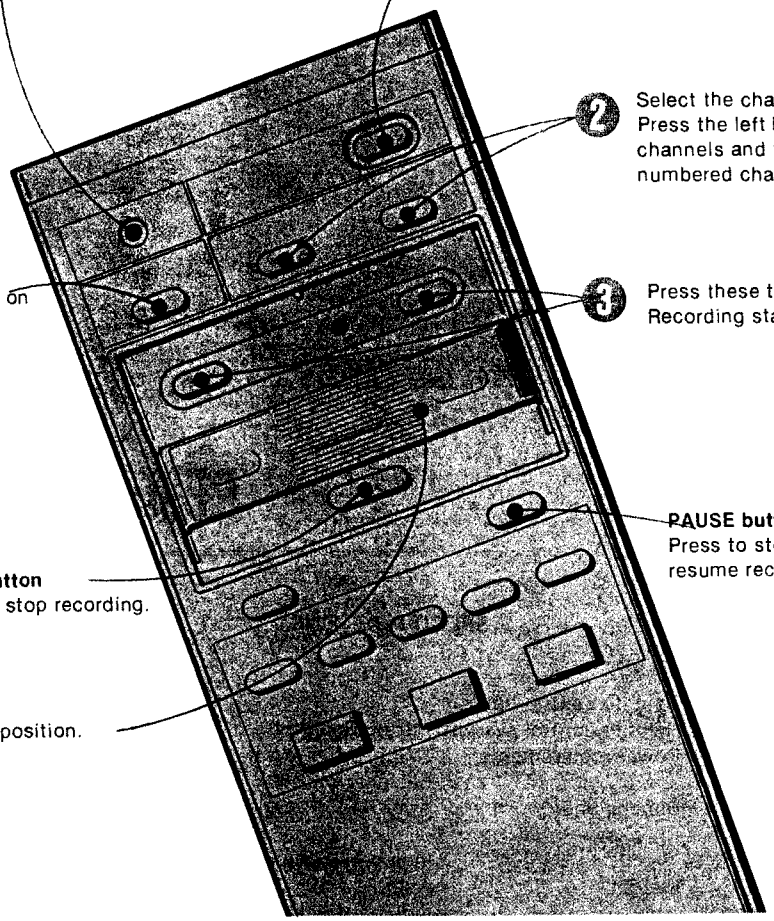

- The unused channels can be skipped during channel selection with the remote control unit if you have cleared the memory of these channels as described in "Clearing unused channels" on page 9 of the accompaning "SET-UP GUIDE".
- Recording will start immediately when the RECORD buttons on the remote control unit are pressed, even if a camera is connected to the recorder.

Playbaok
The buttons on the remote control unit perform the same function as the corresponding buttons on the video recorder.

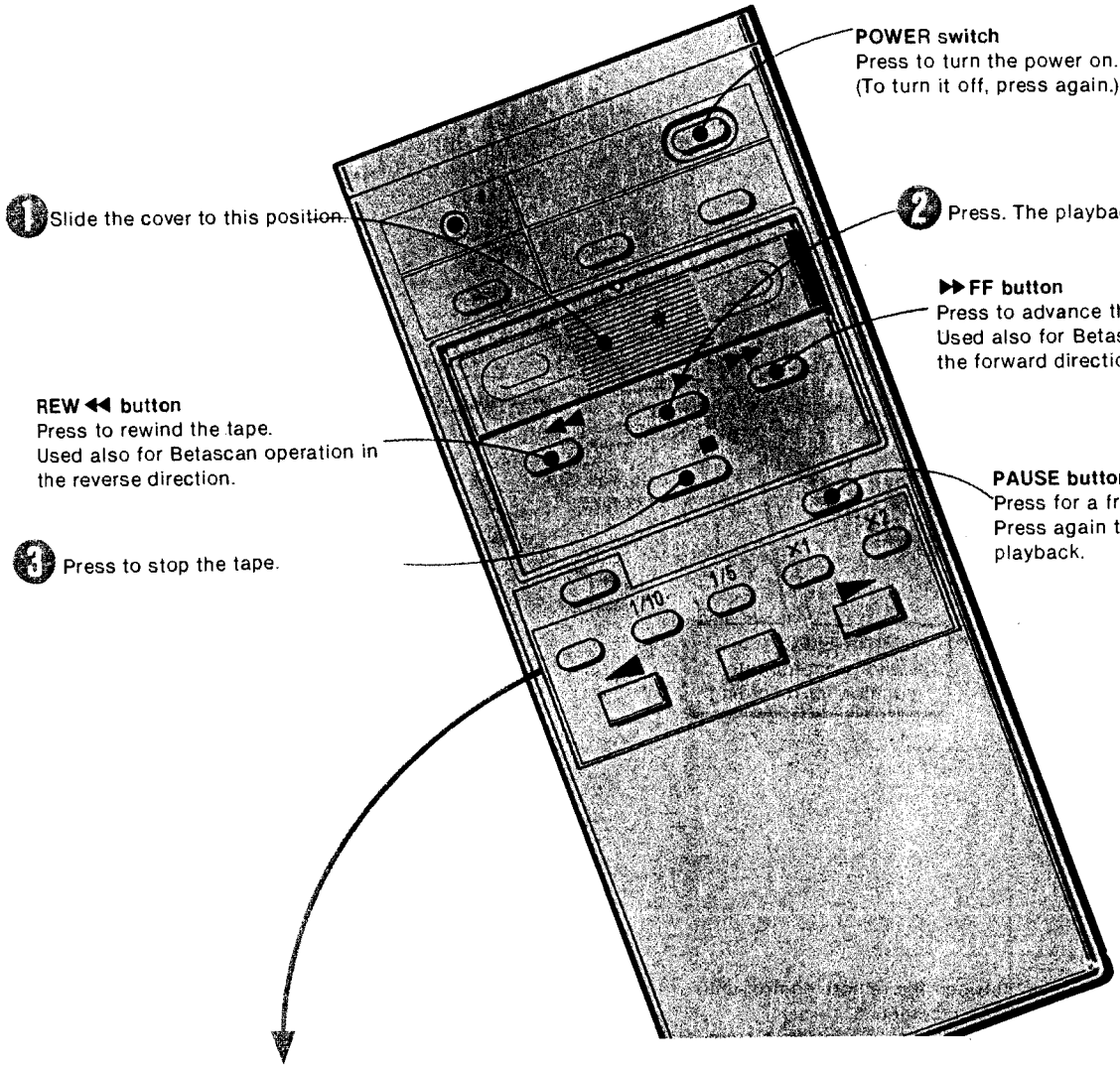

To see the playback picture at various speeds

❶ Press the SWING SEARCH button during playback.

❶ Select the playback speed.

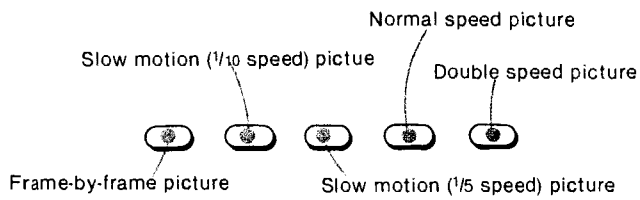

❶ Select the playback direction.

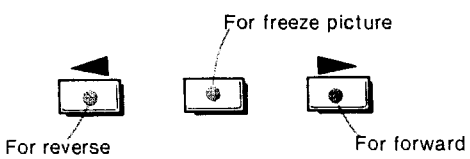

● For frame-by-frame playback, press and release the ◀ or ▶ button reepeatedly. Keep the button depressed for continous frame-by-frame playback.

● Back and forth playback is also possible in the same way as with the buttons on the recorder.

To resume normal playback, press the PLAY ▶ button.

HOW TO USE THE REMOTE CONTROL UNIT

Preparation

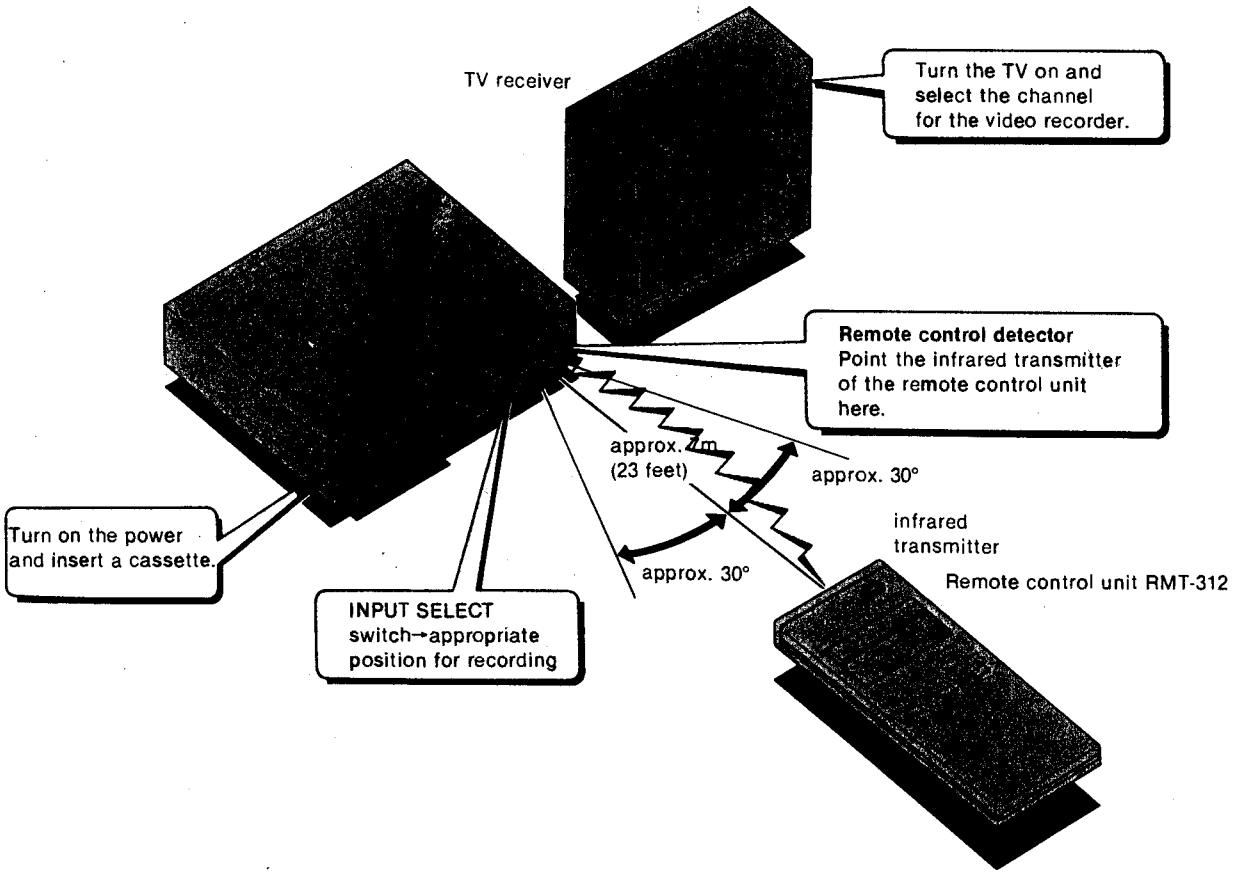

Notes

- There should be no obstacles between the remote control unit and the remote control detector of the recorder.
- The shorter the distance between the remote control unit and the recorder, the wider the angle within which the recorder can be controlled.

5. EXPLODED VIEW

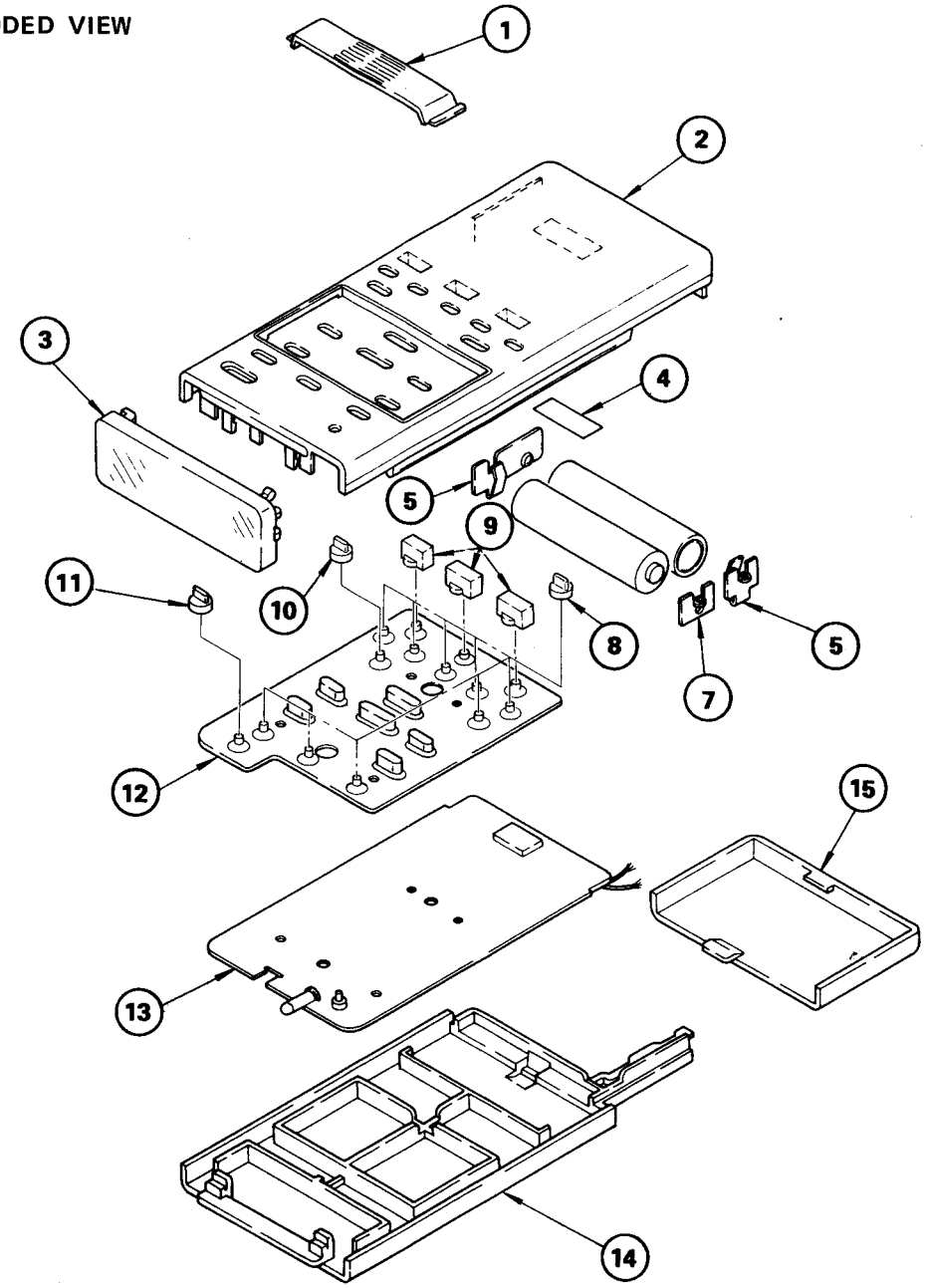

No.	Part No	Description	Remark
1	2-290-603-00	CURSOR	
2	X-3670-033-2	CASE (D) ASSY, UPPER	
3	2-290-608-00	PLATE, FROSTED	
4	♦ :3-703-159-00	LABEL, DESTINATION	
5	4-350-925-00	TERMINAL (C), BATTERY	
6	2-290-601-00	TERMINAL (A), BATTERY	
7	2-290-602-00	TERMINAL (B), BATTERY	
8	2-294-403-00	PUSH BUTTON (S)	
9	2-290-604-11	PUSH BUTTON	
10	2-294-403-11	PUSH BUTTON (S)	
11	2-294-401-00	BUTTON (S), POWER	
12	3-671-806-00	SHEET (D), RUBBER	
13	♦ :1-605-972-12	IR-6 BOARD	
14	2-290-611-00	CASE, LOWER	
15	2-290-606-00	COVER, BATTERY	

NOTE:
- Items with no part number and no description are not stocked because they are seldom required for routine service.
- The construction parts of an assembled part are indicated with a collation number in the remark column.
- As to the part numbered with E-, refer to the electrical parts list.
- Items marked " ♦ " are not stocked since they are seldom required for routine service. Some delay should be anticipated when ordering these items.

The components identified by shading and mark ⚠ are critical for safety. Replace only with part number specified.

Les composants identifiés par une trame et une marque ⚠ sont critiques pour la sécurité. Ne les remplacer que par une pièce portant le numéro spécifié.

STANDARD PARTS LIST

ELECTROLYTIC CAPACITORS

CAP. (μF)	RATING → : Use the high voltege rated one.						
	6.3 VOLT.	10 VOLT.	16 VOLT.	25 VOLT.	35 VOLT.	50 VOLT.	63 VOLT.
	PART No.	PART No.	PART No.	PART No.	PART No.	PART No.	PART No.
0.47						→	→
1.0						→	→
2.2						→	→
3.3						→	→
4.7				→	→	→	1-123-369-00
10			→	→	→	1-123-356-00	1-123-370-00
22			→	1-123-330-00	→	1-123-357-00	1-123-371-00
33	→	→	1-123-318-00	→	1-123-343-00	→	1-123-372-00
47	→	1-123-306-00	→	1-123-332-00	→	1-123-359-00	1-123-373-00
100	→	1-123-307-00	→	1-123-333-00	1-123-345-00	1-123-360-00	1-123-374-00
220	→	1-123-308-00	1-123-321-00	1-123-334-00	1-123-346-00	1-123-361-00	1-123-375-00
330	→	1-123-309-00	1-123-322-00	1-123-335-00	1-123-347-00	1-123-362-00	1-123-376-00
470	1-123-298-00	1-123-310-00	1-123-323-00	1-123-336-00	1-123-348-00	1-123-363-00	1-123-377-00
1000	1-123-299-00	1-123-311-00	1-123-324-00	1-123-337-00	1-123-349-00	1-123-364-00	1-123-378-00
2200	1-123-300-00	→	1-123-325-00	1-123-338-00	1-123-350-00		
3300	1-123-301-00	1-123-313-00	1-123-326-00	1-123-339-00			
4700	1-123-302-00	1-123-314-00	1-123-327-00				
6800	1-123-303-00	1-123-315-00					
10000	1-123-304-00						

CAP. (μF)	100 VOLT.	166 VOLT.	250 VOLT.	250 VOLT.
	PART No.	PART No.	PART No.	PART No.
0.47	1-123-379-00			
1.0	1-123-380-00	1-123-252-00	1-123-003-00	1-121-168-00
2.2	1-123-381-00	1-123-026-00	1-123-027-00	1-123-028-00
3.3	1-123-382-00	1-121-707-00	1-123-004-00	1-123-006-00
4.7	1-123-383-00	1-121-246-00	1-121-759-00	1-123-007-00
10	1-123-384-00	1-121-999-00	1-123-254-00	1-123-008-00
22	1-123-385-00	1-123-253-00	1-123-005-00	1-123-022-00
33	1-123-386-00	1-121-757-00		
47	1-123-387-00	1-121-919-00		
100	1-123-388-00			
220	1-123-389-00			
330	1-123-390-00			
470	1-123-391-00			

CERAMIC CAPACITORS

CAP. (pF)	RATING 50 VOLT.	CAP. (pF)	50 VOLT.	CAP. (pF)	50 VOLT.	CAP. (μF)	50 VOLT.
	PART No.		PART No.		PART No.		PART No.
0.5	1-101-837-00	22	1-102-959-00	150	1-101-361-00	0.001	1-102-074-00
0.75	1-101-586-00	24	1-102-960-00	160	1-101-367-00	0.0012	1-102-118-00
1.0	1-102-934-00	27	1-102-961-00	180	1-102-976-00	0.0015	1-102-119-00
1.5	1-101-576-00	30	1-102-962-00	200	1-102-977-00	0.0018	1-102-120-00
2.0	1-102-935-00	33	1-102-963-00	220	1-102-978-00	0.0022	1-102-121-00
3	1-102-936-00	36	1-102-964-00	240	1-102-979-00	0.0027	1-102-122-00
4	1-102-937-00	39	1-102-965-00	270	1-102-980-00	0.0033	1-102-123-00
5	1-102-942-00	43	1-102-966-00	300	1-102-981-00	0.0039	1-102-124-00
6	1-102-943-00	47	1-101-880-00	330	1-102-820-00	0.0047	1-102-125-00
7	1-102-944-00	51	1-101-882-00	360	1-102-821-00	0.0056	1-102-126-00
8	1-102-945-00	56	1-101-884-00	390	1-102-822-00	0.0068	1-102-127-00
9	1-102-946-00	62	1-101-886-00	430	1-102-823-00	0.0082	1-102-128-00
10	1-102-947-00	68	1-101-888-00	470	1-102-824-00	0.01	1-102-129-00
11	1-102-948-00	75	1-101-890-00	510	1-101-059-00	0.022	1-101-005-00
12	1-102-949-00	82	1-102-971-00	560	1-102-115-00	0.047	1-101-006-00
13	1-102-950-00	91	1-102-972-00	680	1-102-116-00		
15	1-102-951-00	100	1-102-973-00	820	1-102-117-00		
16	1-102-952-00	110	1-102-815-00				
18	1-102-953-00	120	1-102-816-00				
20	1-102-958-00	130	1-101-081-00				

0.001μF = 1,000pF

MYLAR CAPACITORS

CAP. (μF)	RATING 50 VOLT.	100 VOLT.	200 VOLT.	CAP. (μF)	50 VOLT.	150 VOLT.	200 VOLT.	CAP. (μF)	50 VOLT.	100 VOLT.	200 VOLT.
	PART No.	PART No.	PART No.		PART No.	PART No.	PART No.		PART No.	PART No.	PART No.
0.001	1-108-227-00	1-108-365-00	1-108-409-00	0.01	1-108-239-00	1-108-377-00	1-108-421-00	0.1	1-108-251-00	1-108-389-00	1-108-433-00
0.0012	1-108-351-00	1-108-366-00	1-108-410-00	0.012	1-108-357-00	1-108-378-00	1-108-422-00	0.12	1-108-363-00	1-108-390-00	1-108-434-00
0.0015	1-108-228-00	1-108-367-00	1-108-411-00	0.015	1-108-240-00	1-108-379-00	1-108-423-00	0.15	1-108-252-00	1-108-391-00	1-108-435-00
0.0018	1-108-352-00	1-108-368-00	1-108-412-00	0.018	1-108-358-00	1-108-380-00	1-108-424-00	0.18	1-108-364-00	1-108-392-00	1-108-436-00
0.0022	1-108-230-00	1-108-369-00	1-108-413-00	0.022	1-108-242-00	1-108-381-00	1-108-425-00	0.22	1-108-254-00	1-108-393-00	1-108-437-00
0.0027	1-108-353-00	1-108-370-00	1-108-414-00	0.027	1-108-359-00	1-108-382-00	1-108-426-00	0.27	1-108-854-00		
0.0033	1-108-232-00	1-108-371-00	1-108-415-00	0.033	1-108-244-00	1-108-383-00	1-108-427-00	0.33	1-108-855-00		
0.0039	1-108-354-00	1-108-372-00	1-108-416-00	0.039	1-108-360-00	1-108-384-00	1-108-428-00	0.39	1-108-856-00		
0.0047	1-108-234-00	1-108-373-00	1-108-417-00	0.047	1-108-246-00	1-108-385-00	1-108-429-00	0.47	1-108-857-00		
0.0056	1-108-355-00	1-108-374-00	1-108-418-00	0.056	1-108-361-00	1-108-386-00	1-108-430-00				
0.0068	1-108-237-00	1-108-375-00	1-108-419-00	0.068	1-108-249-00	1-108-387-00	1-108-431-00				
0.0082	1-108-356-00	1-108-376-00	1-108-420-00	0.082	1-108-362-00	1-108-388-00	1-108-432-00				

1/4 WATT CARBON RESISTORS

Ω	Part No.	Ω	Part No.	Ω	Part No.	Ω	Part No.	Ω	Part No.	Ω	Part No.	Ω	Part No.
1.0	1-246-401-00	10	1-246-425-00	100	1-246-449-00	1.0k	1-246-473-00	10k	1-246-497-00	100k	1-246-521-00	1.0M	1-246-545-00
1.1	1-246-402-00	11	1-246-426-00	110	1-246-450-00	1.1k	1-246-474-00	11k	1-246-498-00	110k	1-246-522-00	1.1M	1-210-814-00
1.2	1-246-403-00	12	1-246-427-00	120	1-246-451-00	1.2k	1-246-475-00	12k	1-246-499-00	120k	1-246-523-00	1.2M	1-210-815-00
1.3	1-246-404-00	13	1-246-428-00	130	1-246-452-00	1.3k	1-246-476-00	13k	1-246-500-00	130k	1-246-524-00	1.3M	1-210-816-00
1.5	1-246-405-00	15	1-246-429-00	150	1-246-453-00	1.5k	1-246-477-00	15k	1-246-501-00	150k	1-246-525-00	1.5M	1-210-817-00
1.6	1-246-406-00	16	1-246-430-00	160	1-246-454-00	1.6k	1-246-478-00	16k	1-246-502-00	160k	1-246-526-00	1.6M	1-210-818-00
1.8	1-246-407-00	18	1-246-431-00	180	1-246-455-00	1.8k	1-246-479-00	18k	1-246-503-00	180k	1-246-527-00	1.8M	1-210-819-00
2.0	1-246-408-00	20	1-246-432-00	200	1-246-456-00	2.0k	1-246-480-00	20k	1-246-504-00	200k	1-246-528-00	2.0M	1-210-820-00
2.2	1-246-409-00	22	1-246-433-00	220	1-246-457-00	2.2k	1-246-481-00	22k	1-246-505-00	220k	1-246-529-00	2.2M	1-210-821-00
2.4	1-246-410-00	24	1-246-434-00	240	1-246-458-00	2.4k	1-246-482-00	24k	1-246-506-00	240k	1-246-530-00	2.4M	1-244-754-00
2.7	1-246-411-00	27	1-246-435-00	270	1-246-459-00	2.7k	1-246-483-00	27k	1-246-507-00	270k	1-246-531-00	2.7M	1-244-755-00
3.0	1-246-412-00	30	1-246-436-00	300	1-246-460-00	3.0k	1-246-484-00	30k	1-246-508-00	300k	1-246-532-00	3.0M	1-244-756-00
3.3	1-246-413-00	33	1-246-437-00	330	1-246-461-00	3.3k	1-246-485-00	33k	1-246-509-00	330k	1-246-533-00	3.3M	1-244-757-00
3.6	1-246-414-00	36	1-246-438-00	360	1-246-462-00	3.6k	1-246-486-00	36k	1-246-510-00	360k	1-246-534-00	3.6M	1-244-758-00
3.9	1-246-415-00	39	1-246-439-00	390	1-246-463-00	3.9k	1-246-487-00	39k	1-246-511-00	390k	1-246-535-00	3.9M	1-244-759-00
4.3	1-246-416-00	43	1-246-440-00	430	1-246-464-00	4.3k	1-246-488-00	43k	1-246-512-00	430k	1-246-536-00	4.3M	1-244-760-00
4.7	1-246-417-00	47	1-246-441-00	470	1-246-465-00	4.7k	1-246-489-00	47k	1-246-513-00	470k	1-246-537-00	4.7M	1-244-761-00
5.1	1-246-418-00	51	1-246-442-00	510	1-246-466-00	5.1k	1-246-490-00	51k	1-246-514-00	510k	1-246-538-00	5.1M	1-244-762-00
5.6	1-246-419-00	56	1-246-443-00	560	1-246-467-00	5.6k	1-246-491-00	56k	1-246-515-00	560k	1-246-539-00		
6.2	1-246-420-00	62	1-246-444-00	620	1-246-468-00	6.2k	1-246-492-00	62k	1-246-516-00	620k	1-246-540-00		
6.8	1-246-421-00	68	1-246-445-00	680	1-246-469-00	6.8k	1-246-493-00	68k	1-246-517-00	680k	1-246-541-00		
7.5	1-246-422-00	75	1-246-446-00	750	1-246-470-00	7.5k	1-246-494-00	75k	1-246-518-00	750k	1-246-542-00		
8.2	1-246-423-00	82	1-246-447-00	820	1-246-471-00	8.2k	1-246-495-00	82k	1-246-519-00	820k	1-246-543-00		
9.1	1-246-424-00	91	1-246-448-00	910	1-246-472-00	9.1k	1-246-496-00	91k	1-246-520-00	910k	1-246-544-00		

HARDWARE NOMENCLATURE

Screw:

P 3 x 10
- *L: Length in mm*
- *D: Diameter in mm*
- *Type of head*
- *Indicated slotted-head only. Unless otherwise indicated, it means cross-recessed head (Phillips type).*

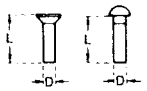

Nut, Washer, Retaining ring:

N 3
- *Diameter of usable screw or shaft*
- *Reference designation*

Reference Designation	Shape	Description	Remarks
		SCREWS	
P		pan-head screw	binding-head (B) screw for replacement
PWH		pan-head screw with washer face	binding-head (B) screw and flat washer for replacement
PS PSP		pan-head screw with spring washer	binding-head (B) screw and spring washer for replacement
PSW PSPW		pan-head screw with spring and flat washers	binding-head (B) screw and spring and flat washers for replacement
R		round-head screw	binding-head (B) screw for replacement
K		flat-countersunk-head screw	
RK		oval-countersunk-head screw	
B		binding-head screw	
T		truss-head screw	binding-head (B) screw for replacement
F		flat-fillistar-head scraw	
RF		fillister-head screw	
BV		brazier-head screw	

Reference Designation	Shape	Description	Remarks
		SELF-TAPPING SCREWS	
TA		self-tapping screw	ex: TA, P 3 x 10
PTP		pan-head self-tapping screw	binding-head self-tapping (TA, B) screw for replacement
PTPWH		pan-head self-tapping screw with washer face	binding-head self tapping (TA, B) screw and flat washer for replacement
PTTWH		pan-head thread-rolling screw with washer face	binding-head (B) screw and flat washer for replacement
		SET SCREWS	
SC		set screw	
SC		hexagon-socket set screw	ex: SC 2.6 x 4, hexagon socket
		NUT	
N		nut	
		WASHERS	
W		flat washer	
SW		spring washer	
LW		internal-tooth lock washer	ex: LW3, internal
LW		external-tooth lock washer	ex: LW3, external
		RETAINING RINGS	
E		retaining ring	
G		grip-type retaining ring	

Sony Corporation
TV & Camera Group
© 1982

9-972-144-02
03

82C0508-1
Printed in Japan

S. 15-142 lex

SECTION 5
EXPLODED VIEWS

NOTE:
- Items with no part number and no description are not stocked because they are seldom required for routine service.
- The construction parts of an assembled part are indicated with a collation number in the remark column.
- As to the part numbered with E-, refer to the electrical parts list.
- Items marked " ♠ " are not stocked since they are seldom required for routine service. Some delay should be anticipated when ordering these items.

When indicating parts by reference number, please include the board name.

The components identified by shading and mark ⚠ are critical for safety. Replace only with part number specified.

Les composants identifiés par une trame et une marque ⚠ sont critiques pour la sécurité. Ne les remplacer que par une pièce portant le numéro spécifié.

A B C D

1 2 3

(1) CABINET ASSEMBLY

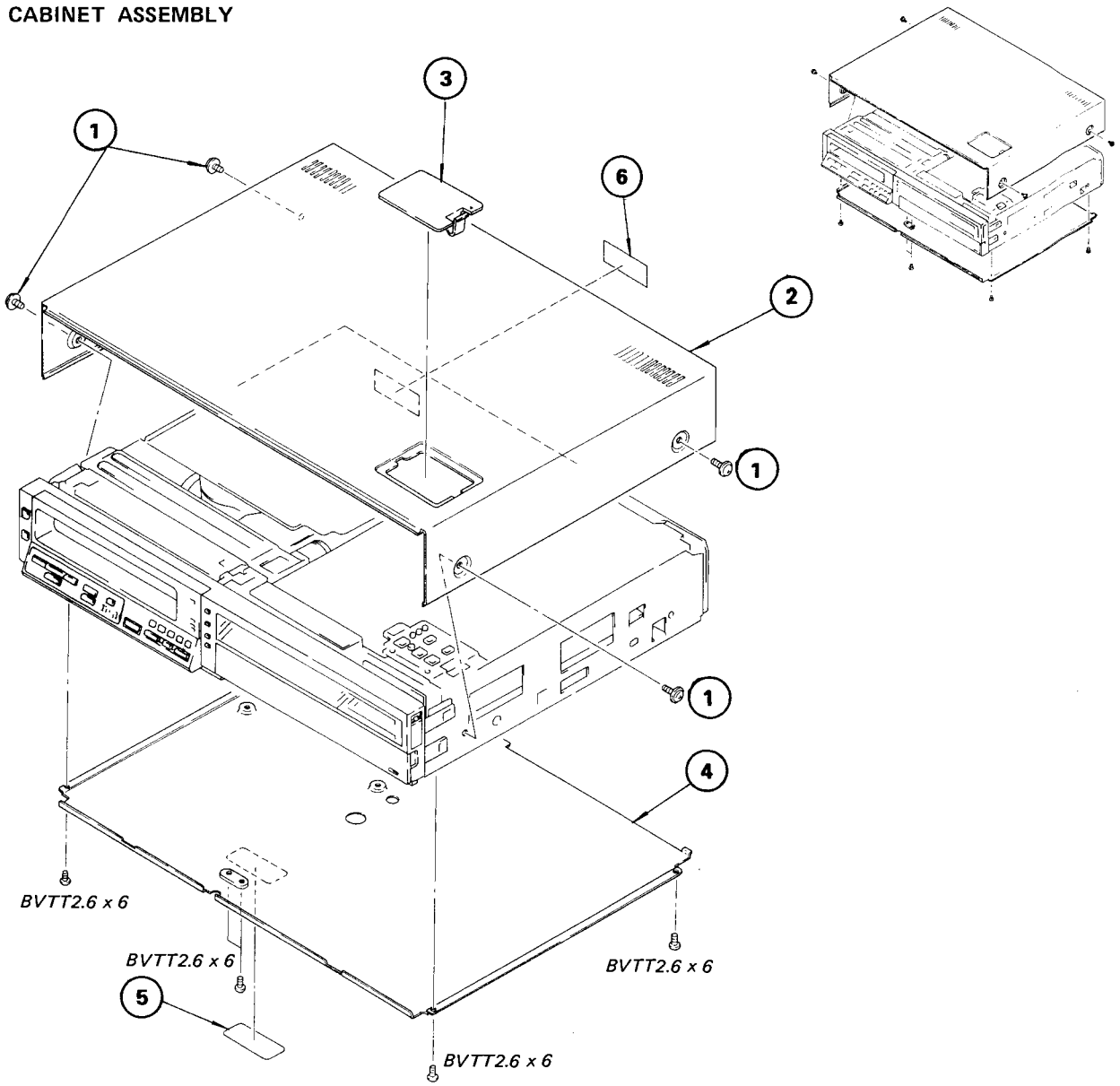

No.	Part No.	Description	Remark
1	3-703-354-11	SCREW (OS), CASE, CLAW	
2	X-3670-047-0	CASE ASSY (TYPE 1)	
2	X-3670-023-1	CASE ASSY (TYPE 2)	
3	4-342-123-00	DOOR, PRESET	
4	X-3670-039-0	PLATE ASSY, BOTTOM	5
5	3-703-043-21	LABEL, MAIN COUTION	
6	♠:3-671-881-00	LABEL, MODEL NUMBER (TYPE 1)	
6	♠:3-675-562-01	LABEL, MODEL NUMBER (TYPE 2)	

A	B	C	D

(2) FRONT ASSEMBLY

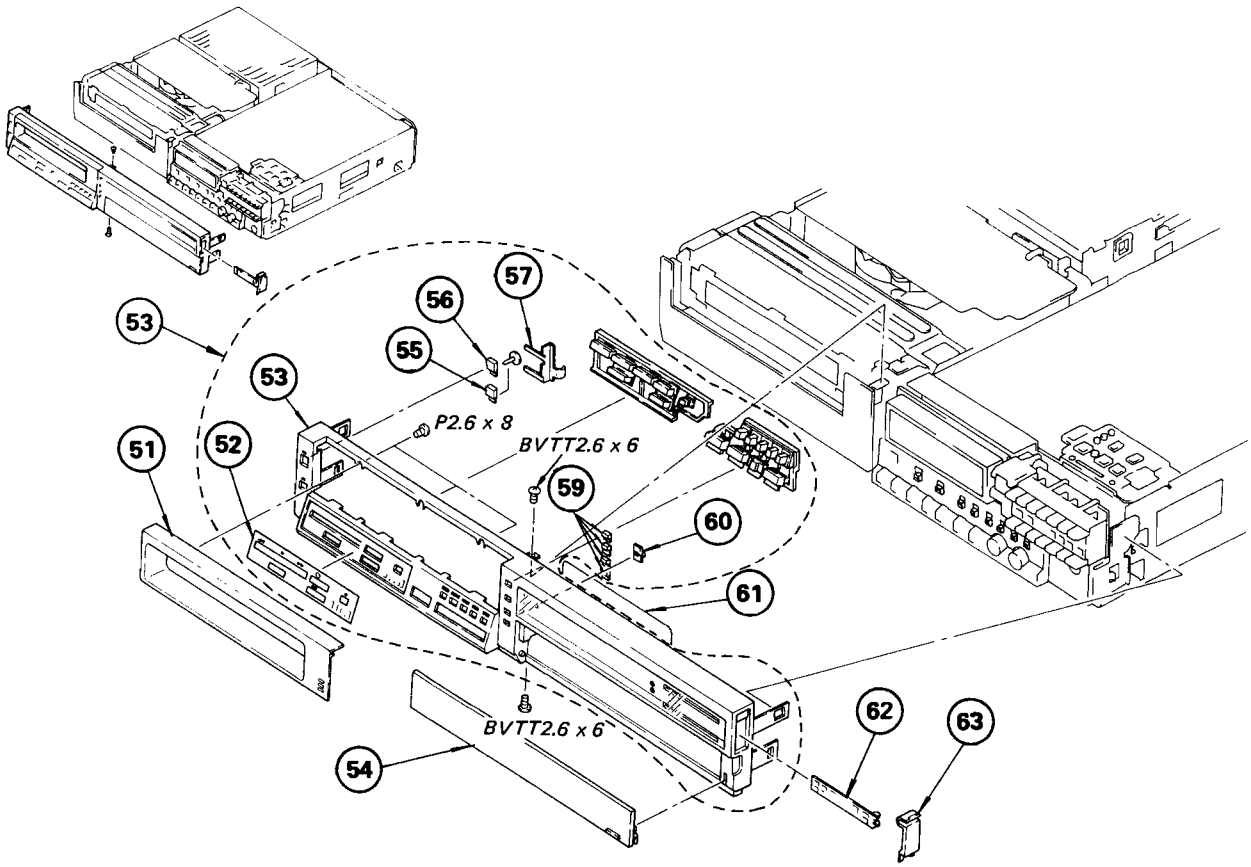

No.	Part No	Description	Remark
51	X-3670-038-0	GUIDE ASSY, ENTRANCE, CASSETTE	
52	3-670-176-00	PLATE, ORNAMENTAL, BUTTON, FU	
53	X-3670-054-0	PANEL ASSY, FRONT 52, 55—57. 59. 60	
54	X-3670-050-0	DOOR ASSY, FRONT	
55	3-670-082-11	BUTTON, PE	
56	3-670-082-00	BUTTON, PE	
57	3-670-080-00	SPRING, LEAF (PE)	

No.	Part No	Description	Remark
59	3-670-074-00	BUTTON, COUNTER	
60	♦ :3-670-075-00	LED COVER, TIMER RECORD	
61	3-671-861-00	COVER, TIMER	
62	3-670-122-00	HOLDER, INDICATOR	
63	3-670-087-00	FRONT (RIGHT)	

(3) POWER ASSEMBLY

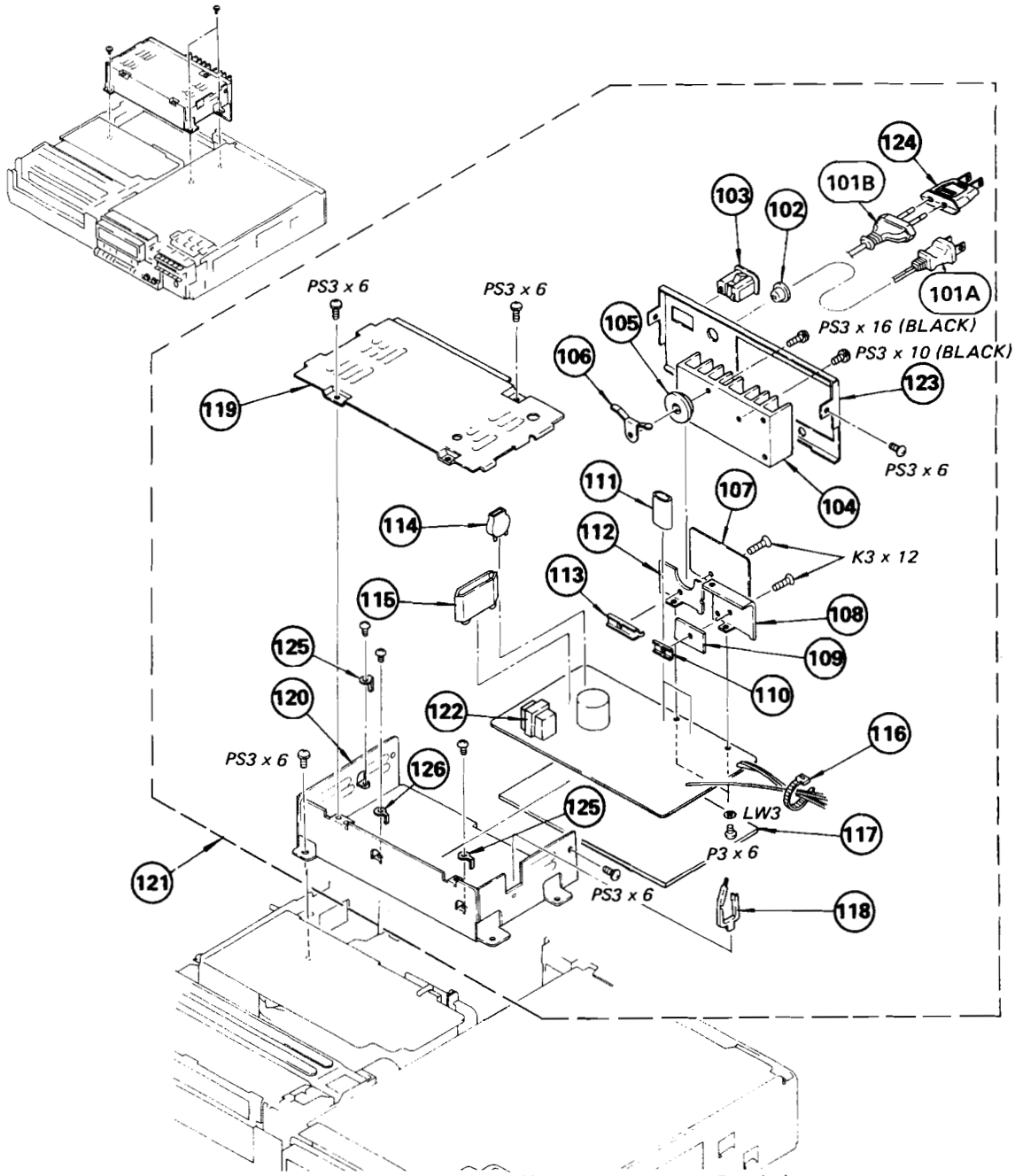

No.	Part No.	Description	Remark
101A	⚠.1-551-964-00	CORD, POWER (TYPE 1)	
101B	⚠.1-555-312-21	CORD, POWER (TYPE 2)	
102	⚠.2-231-019-00	GROMMET, STRAIN RELIEF (TYPE 1)	
102	⚠.3-663-213-01	RETAINER, CORD (TYPE 2)	
♦103	⚠.1-561-347-00	SOCKET, AC (TYPE 1)	
104	♦:9-982-200-00	HEAT SINK, FIN	
105	2-291-522-00	WASHER INSULATING	
106	♦:9-982-213-00	BRACKET, UP	
107	9-982-204-00	SHEET, INSULATING (TYPE 1)	
108	♦:9-982-202-00	HEAT SINK, SP	
109	9-982-203-00	SHEET, INSULATING (TYPE 1)	
110	♦:9-982-021-00	RETAINER, SP	
111	2-291-517-00	SHEET INSULATING, UP TO, 3	
112	♦:2-291-515-00	HEAT SINK, UP	
113	♦:2-291-519-00	RETAINER, UP	
114	♦:2-291-547-00	COVER, CAPACITOR	
115	♦:4-316-137-00	COVER, CAPACITOR (TYPE 1)	
116	♦:3-701-748-00	CLAMP, HARNESS	
117	♦:9-982-208-00	PLATE, INSULATING (TYPE 1)	
118	♦:4-316-015-00	CLAMP, HARNESS	
119	♦:9-982-197-00	CASE, UPPER	
120	♦:9-982-198-00	CASE, LOWER (TYPE 1)	
120	♦:3-677-522-01	CASE, LOWER (TYPE 2)	
121	⚠.1-413-081-11	POWER BLOCK (SR-11A)	
		101, 102, 103, 104, 105, 106, 107, 108, 109, 110, 111, 112, 113, 114, 115, 116, 117, 118, 119, 120, 122, 123	(TYPE 1)
121	⚠.1-413-116-11	POWER BLOCK (SR-11PH)	
		101, 102, 104, 105, 106, 108, 110, 111, 112, 113, 114, 116, 118, 119, 120, 122, 123, 124, 125, 126	(TYPE 2)
122	⚠.1-447-197-00	TRANSFORMER, POWER (TYPE 1)	
122	⚠.1-446-932-00	TRANSFORMER, POWER (TYPE 2)	
123	♦:9-982-265-00	PANEL, CASE (TYPE 1)	
123	♦:3-677-520-01	PANEL (TYPE 2)	
124	⚠.1-506-409-00	ADAPTOR, CONVERSION (TYPE 2)	
125	♦:9-982-214-01	LUG (A) (TYPE 2)	
126	♦:9-982-215-01	LUG (B) (TYPE 2)	

(4) MAIN BOARD ASSEMBLY

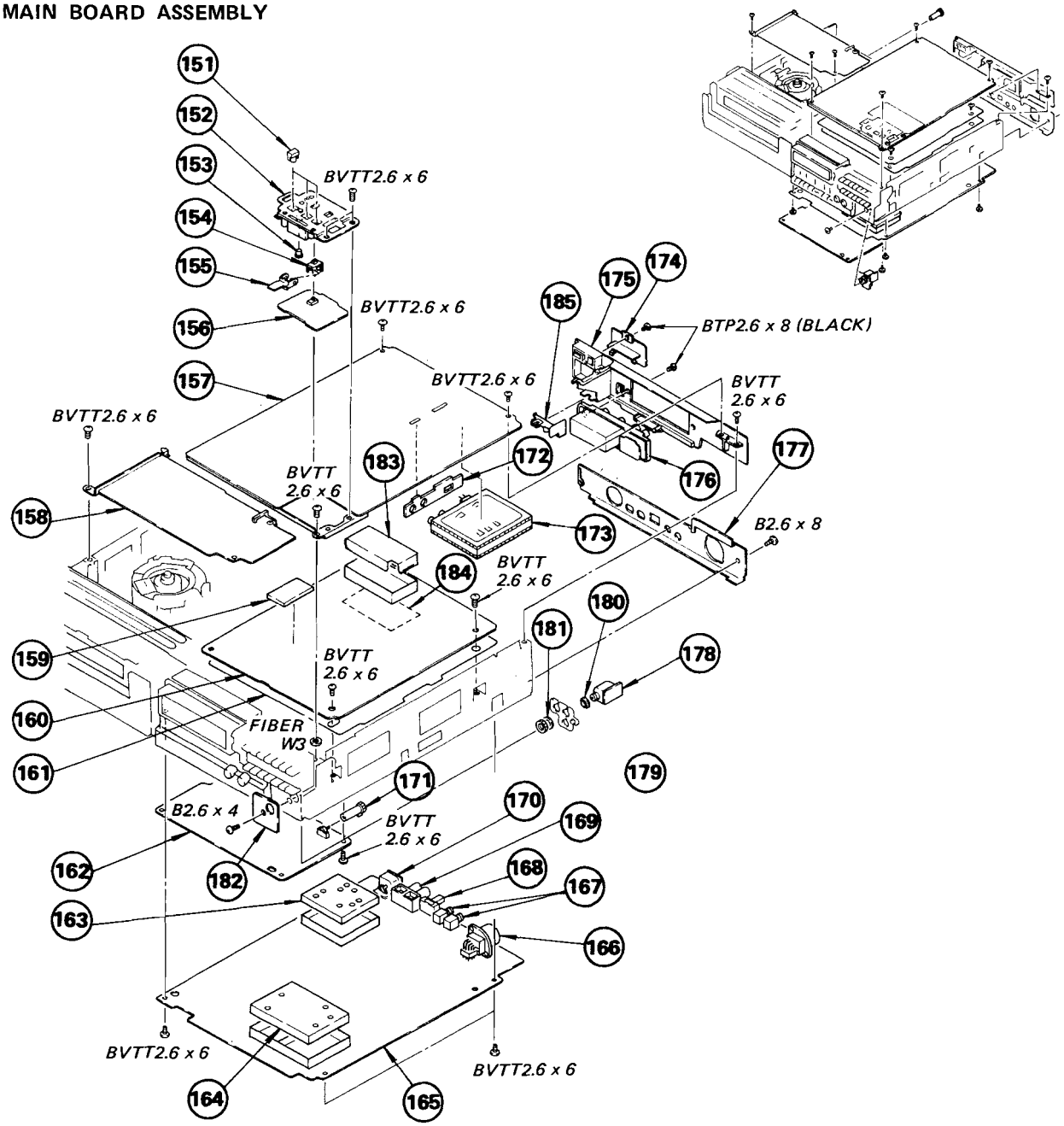

No.	Part No	Description	Remark
151	2-291-041-00	BUTTON (A), PRESET	
152	X-3670-025-0	PRESET ASSY	151,153
153	3-669-528-00	CAP, BUTTON	
154	3-670-148-00	KEY (P), SLIDE	
155	3-670-138-00	LEVER, RELEASE	
156 ♦	:1-605-581-00	CH-21 BOARD	
157 ♦	:A-6721-086-A	TU-21 BOARD, COMPLETE	
158 ♦	:A-6717-236-A	RR-1A BOARD, COMPLETE	
159 ♦	:1-606-231-00	MB-3 BOARD	
160 ♦	:A-6715-131-A	SS-10A BOARD, COMPLETE	
161 ♦	:3-670-123-00	INNER, INSULATOR	
162 ♦	:A-6711-323-A	VL-3 BOARD, COMPLETE	
163 ♦	:3-671-855-00	LID, CASE, SHIELD, VA-A	
164 ♦	:3-671-852-00	LID, CASE, SHIELD, VA-V	
165 ♦	:A-6711-314-A	VA-3Z BOARD, COMPLETE	
166	1-561-690-00	CONNECTOR, CAMERA 14P	
167	1-507-251-XX	JACK	
168	1-552-821-00	SWITCH, SLIDE	

No.	Part No	Description	Remark
169	1-507-742-00	JACK, PIN 2P	
170	1-561-703-00	CONNECTOR, DIN 8P	
171	3-670-149-00	KNOB, V SYNCHRONOUS	
172 ♦	:1-605-575-00	TU-22 BOARD	
173	1-463-377-00	TUNER (BT-864)	
174	2-291-019-00	LID, BOOSTER	
175	3-670-160-11	PANEL (UPPER), REAR	
176	1-536-672-41	TERMINAL BOARD (WITH ANT SW)	
177	3-671-808-03	PANEL (LOWER), REAR	
178 ♦	:1-606-272-00	MI-2 BOARD	
179	1-507-285-00	JACK	
180	3-670-164-00	SPACER, JACK	
181	3-701-444-11	WASHER, 6	
182 ♦	:3-670-171-00	PLATE (SMALL), ORNAMENTAL	
183 ♦	:X-3670-043-0	LID ASSY, SS-10 SHIELD CASE	
184 ♦	:X-3670-042-0	LID ASSY, REAR, SHIELD CASE	
185 ♦	:3-671-857-00	PLATE, GROUND	

(5) FRONT BOARD ASSEMBLY

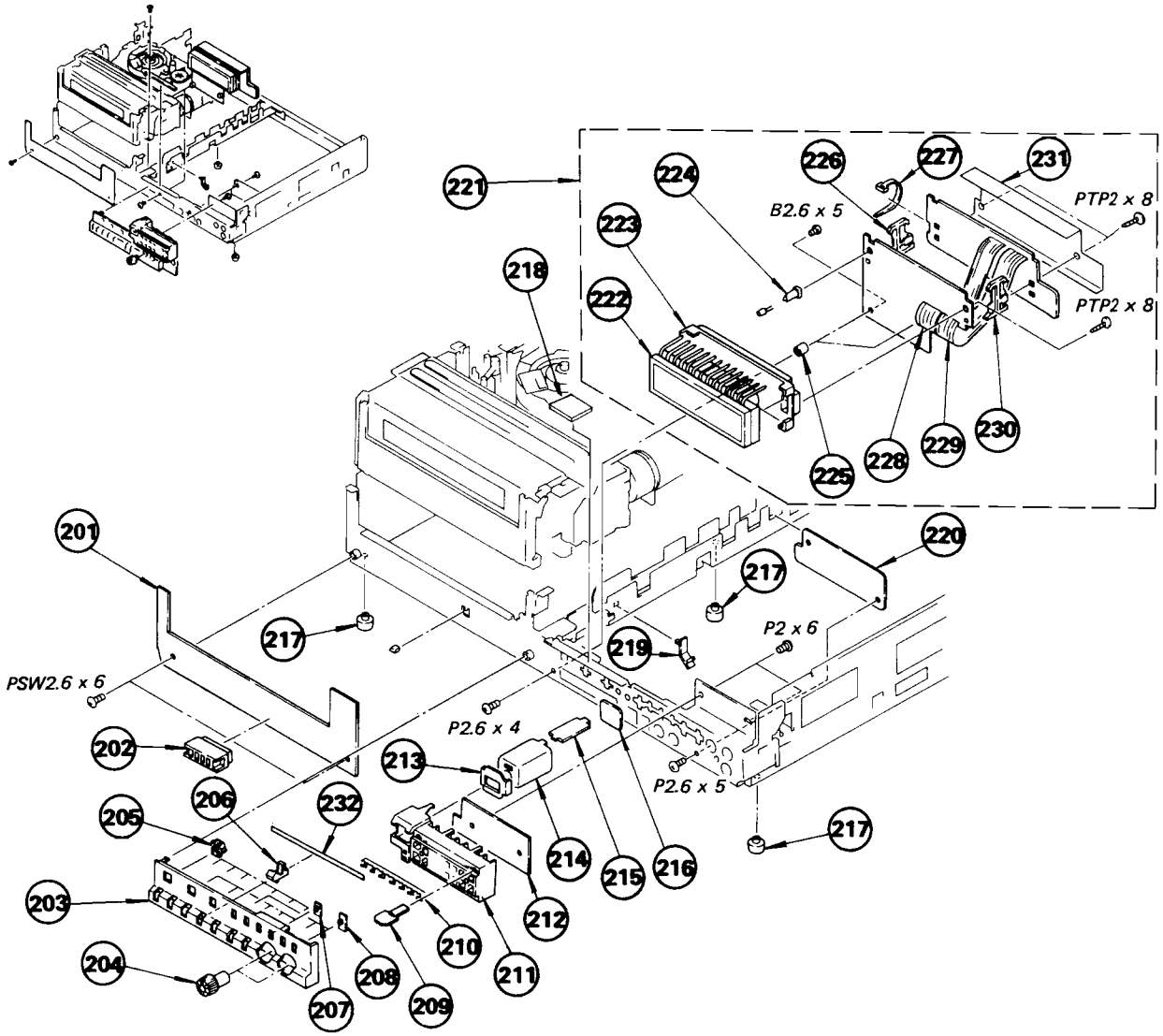

No.	Part No	Description	Remark
201	♦:A-6717-225-A	FU-3 BOARD, COMPLETE	
202	♦:3-670-094-00	HOLDER, LED, 6 GANG	
203	X-3670-051-0	PANEL ASSY, SUB, FRONT	
204	3-670-093-00	KNOB, TRACK CONTROL	
205	3-670-091-00	KEY (B), TACT	
206	3-670-090-00	KEY (A), TACT	
207	3-670-089-00	KEY (B), SLIDE	
208	3-670-088-00	KEY (A), SLIDE	
209	2-291-024-00	BUTTON, TUNER	
210	♦:2-291-025-00	SPRING, LEAF	
211	3-670-159-00	FRAME, TUNER	
212	♦:1-605-895-00	CH-22 BOARD	
213	♦:3-671-831-00	COVER, RAY CATCHER BLOCK	
214	♦:4-342-117-00	CASE, SHIELD (MAIN), R	
215	♦:1-603-976-00	N BOARD	
216	♦:4-342-118-00	LID, SHIELD CASE, R	
217	3-670-155-00	LEG	

No.	Part No.	Description	Remark
218	♦:3-675-599-01	SPACER, TIMER	
219	♦:3-701-832-00	HINGE, CIRCUIT BOARD	
220	♦:1-605-410-00	SW-12 BOARD	
221	1-548-552-12	TIMER BLOCK (TYPE 1) (222, 223, 224, 225, 226,	
221	1-548-552-21	TIMER BLOCK (TYPE 2) (227, 228, 229, 230, 231	
222	♦:9-982-255-00	FLUORESCENT DISPLAY	
223	♦:9-982-256-00	HOLDER, INDICATION TUBE	
224	♦:9-982-259-00	HOLDER, LED	
225	♦:9-982-257-00	SPACER, PC BOARD	
226	♦:9-982-245-00	HOLDER, PC BOARD	
227	3-701-748-00	CLAMP, HARNESS	
228	♦:9-982-061-00	CABLE, RIBBON 9P	
229	♦:9-982-260-00	CABLE, RIBBON 10P	
230	♦:9-982-254-00	HOLDER, PC BOARD	
231	♦:9-982-253-00	CASE ASS'Y SHIELD	
232	♦:3-671-865-00	CUSHION, BUTTON	

(6) CASSETTE LOADING ASSEMBLY 1

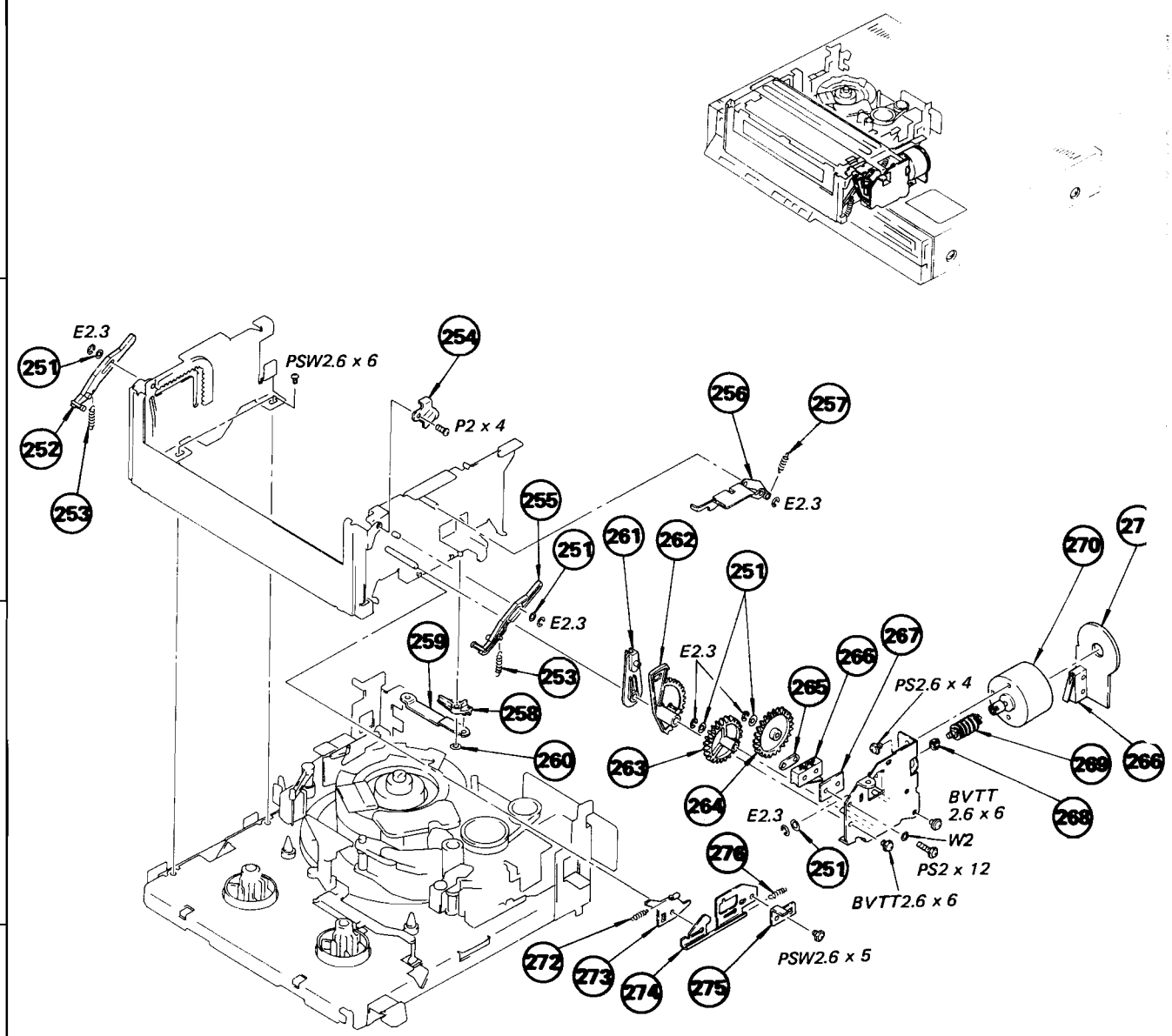

No.	Part No	Description	Remark
251	3-701-439-21	WASHER	
252	3-670-056-00	ARM (L), DOOR	
253	3-500-130-00	SPRING, TENSION	
254	♦:3-671-819-00	COVER, SECTOR GEAR	
255	3-670-057-00	ARM (R), DOOR	
256	♦:3-670-152-00	ARM, LOCK, UP	
257	3-536-767-XX	SPRING, TENSION	
258	3-670-001-00	LEVER, UNLOCK	
259	3-670-034-00	JOINT, UNLOCK	
260	3-669-465-00	WASHER (1.5), STOPPER	
261	3-670-136-00	ARM, HOLDER DRIVING	
262	3-670-151-00	GEAR, SECTOR	
263	3-670-016-00	GEAR (A)	

No.	Part No	Description	Remark
264	♦:3-670-015-00	WHEEL, WORM	
265	♦:3-646-476-00	NUT, PLATE	
266	1-552-664-00	SWITCH, MICRO	
267	3-534-263-00	INSULATOR	
268	♦:3-670-168-00	BEARING, WORM	
269	X-3670-001-0	WORM ASSY	
270	X-3670-002-0	MOTOR ASSY, FL	
271	♦:A-6728-246-A	LM-9 BOARD, COMPLETE	
272	3-530-248-XX	SPRING, TENSION	
273	♦:3-670-010-00	STOPPER, LOCK	
274	♦:3-670-009-00	PLATE, LOCK	
275	♦:3-670-011-00	PLATE, ADJUSTMENT, CD	
276	3-630-615-XX	SPRING, TENSION	

SECTION 5
EXPLODED VIEWS

NOTE:
- Items with no part number and no description are not stocked because they are seldom required for routine service.
- The construction parts of an assembled part are indicated with a collation number in the remark column.
- As to the part numbered with E-, refer to the electrical parts list.
- Items marked " ♦ " are not stocked since they are seldom required for routine service. Some delay should be anticipated when ordering these items.

When indicating parts by reference number, please include the board name.

The components identified by shading and mark ⚠ are critical for safety. Replace only with part number specified.

Les composants identifiés par une trame et une marque ⚠ sont critiques pour la sécurité. Ne les remplacer que par une pièce portant le numéro spécifié.

A | B | C | D

1
2
3

(1) CABINET ASSEMBLY

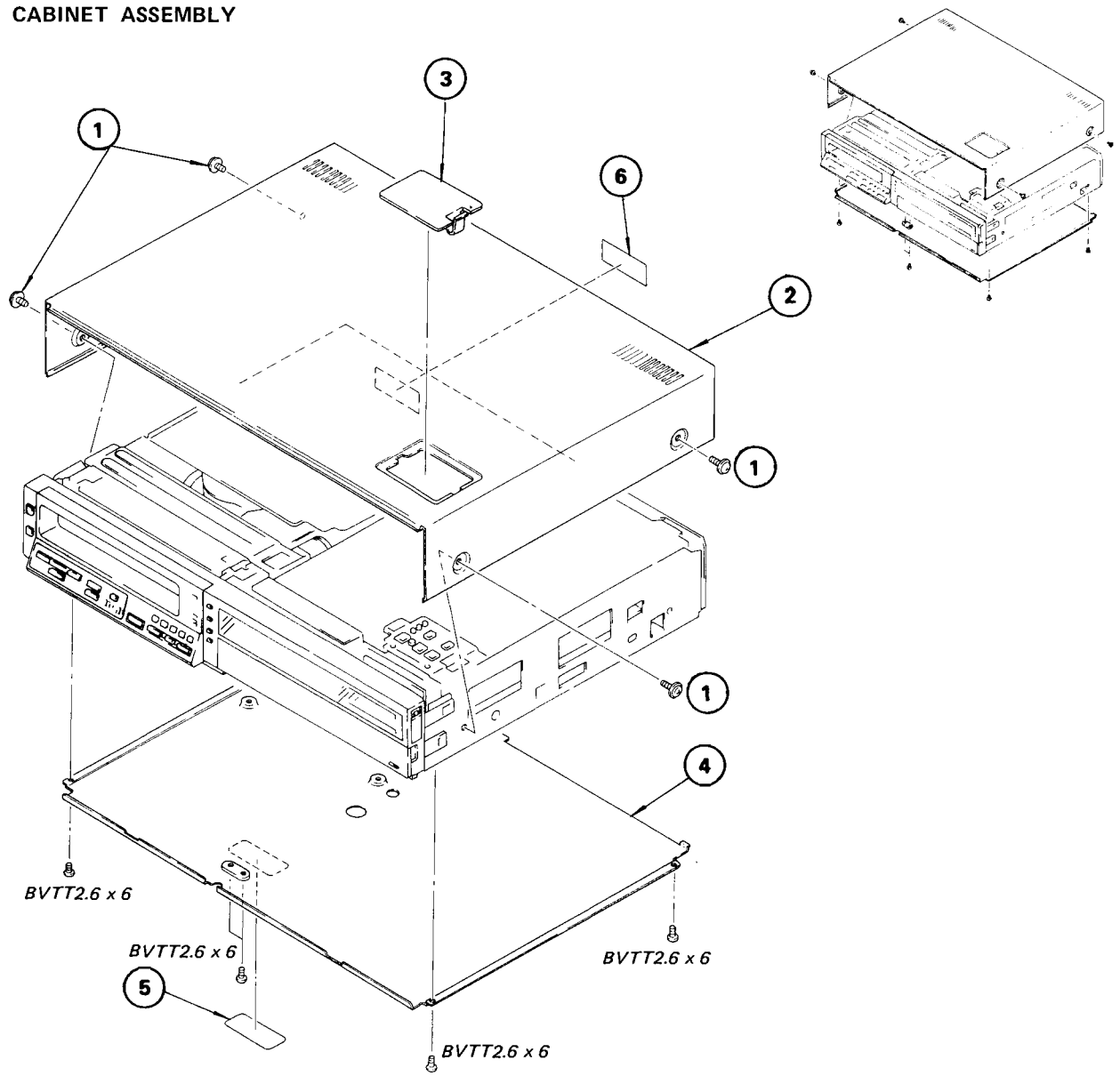

No.	Part No.	Description	Remark
1	3-703-354-11	SCREW (OS), CASE, CLAW	
2	X-3670-047-0	CASE ASSY (TYPE 1)	
2	X-3670-023-1	CASE ASSY (TYPE 2)	
3	4-342-123-00	DOOR, PRESET	
4	X-3670-039-0	PLATE ASSY, BOTTOM	5
5	3-703-043-21	LABEL, MAIN COUTION	
6	♦:3-671-881-00	LABEL, MODEL NUMBER (TYPE 1)	
6	♦:3-675-562-01	LABEL, MODEL NUMBER (TYPE 2)	

(2) FRONT ASSEMBLY

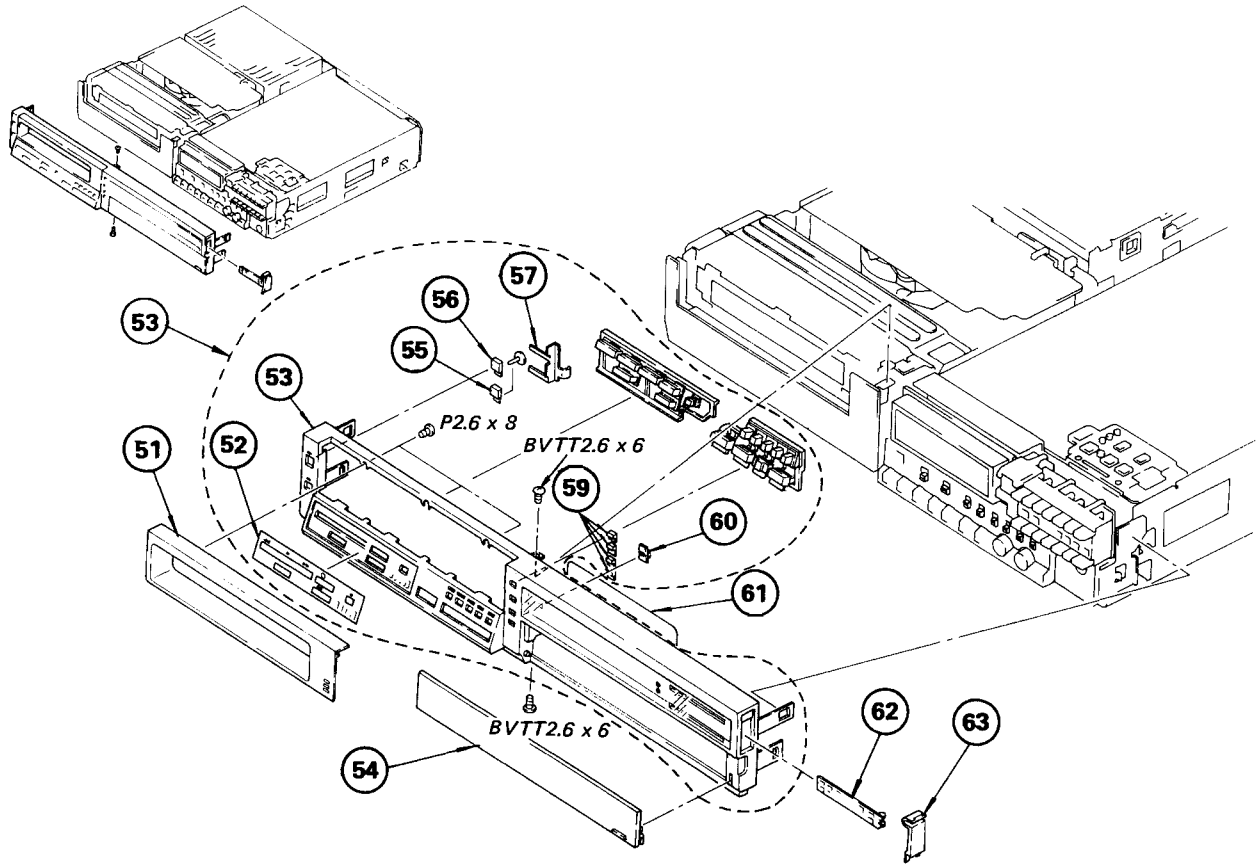

No.	Part No	Description	Remark
51	X-3670-038-0	GUIDE ASSY, ENTRANCE, CASSETTE	
52	3-670-176-00	PLATE, ORNAMENTAL, BUTTON, FU	
53	X-3670-054-0	PANEL ASSY, FRONT 52, 55—57. 59. 60	
54	X-3670-050-0	DOOR ASSY, FRONT	
55	3-670-082-11	BUTTON, PE	
56	3-670-082-00	BUTTON, PE	
57	3-670-080-00	SPRING, LEAF (PE)	
59	3-670-074-00	BUTTON, COUNTER	
60	♦ :3-670-075-00	LED COVER, TIMER RECORD	
61	3-671-861-00	COVER, TIMER	
62	3-670-122-00	HOLDER, INDICATOR	
63	3-670-087-00	FRONT (RIGHT)	

(3) POWER ASSEMBLY

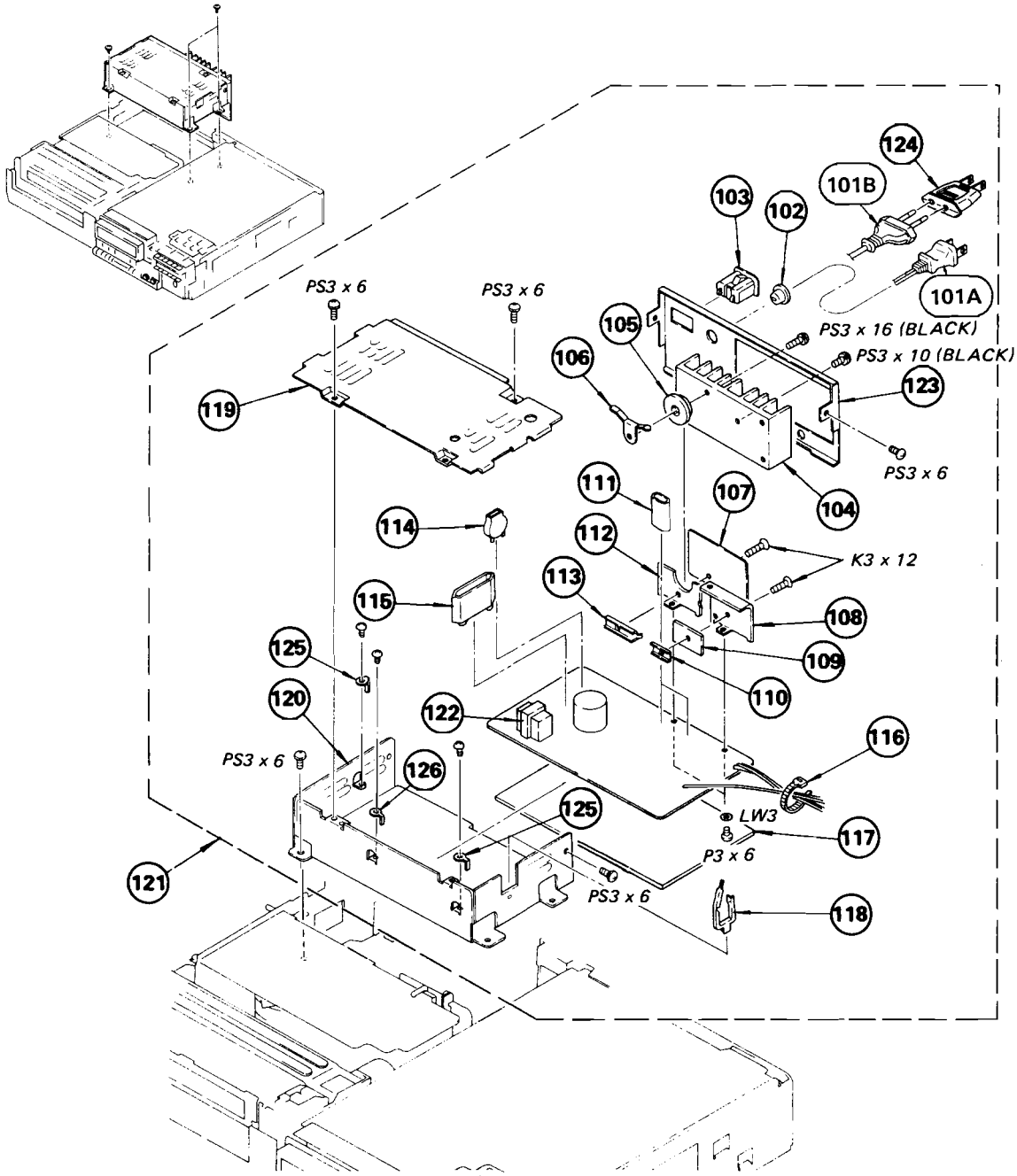

No.	Part No.	Description	Remark
101A	⚠.1-551-964-00	CORD, POWER (TYPE 1)	
101B	⚠.1-555-312-21	CORD, POWER (TYPE 2)	
102	⚠.2-231-019-00	GROMMET, STRAIN RELIEF (TYPE 1)	
102	⚠.3-663-213-01	RETAINER, CORD (TYPE 2)	
♦103	⚠.1-561-347-00	SOCKET, AC (TYPE 1)	
104	♦:9-982-200-00	HEAT SINK, FIN	
105	2-291-522-00	WASHER INSULATING	
106	♦:9-982-213-00	BRACKET, UP	
107	9-982-204-00	SHEET, INSULATING (TYPE 1)	
108	♦:9-982-202-00	HEAT SINK, SP	
109	9-982-203-00	SHEET, INSULATING (TYPE 1)	
110	♦:9-982-021-00	RETAINER, SP	
111	2-291-517-00	SHEET INSULATING, UP TO, 3	
112	♦:2-291-515-00	HEAT SINK, UP	
113	♦:2-291-519-00	RETAINER, UP	
114	♦:2-291-547-00	COVER, CAPACITOR	
115	♦:4-316-137-00	COVER, CAPACITOR (TYPE 1)	
116	♦:3-701-748-00	CLAMP, HARNESS	
117	♦:9-982-208-00	PLATE, INSULATING (TYPE 1)	
118	♦:4-316-015-00	CLAMP, HARNESS	
119	♦:9-982-197-00	CASE, UPPER	
120	♦:9-982-198-00	CASE, LOWER (TYPE 1)	
120	♦:3-677-522-01	CASE, LOWER (TYPE 2)	
121	⚠.1-413-081-11	POWER BLOCK (SR-11A)	
		101, 102, 103, 104, 105, 106, 107, 108, 109, 110, 111, 112, 113, 114, 115, 116, 117, 118, 119, 120, 122, 123	(TYPE 1)
121	⚠.1-413-116-11	POWER BLOCK (SR-11PH)	
		101, 102, 104, 105, 106, 108, 110, 111, 112, 113, 114, 116, 118, 119, 120, 122, 123, 124, 125, 126	(TYPE 2)
122	⚠.1-447-197-00	TRANSFORMER, POWER (TYPE 1)	
122	⚠.1-446-932-00	TRANSFORMER, POWER (TYPE 2)	
123	♦:9-982-265-00	PANEL, CASE (TYPE 1)	
123	♦:3-677-520-01	PANEL (TYPE 2)	
124	⚠.1-506-409-00	ADAPTOR, CONVERSION (TYPE 2)	
125	♦:9-982-214-01	LUG (A) (TYPE 2)	
126	♦:9-982-215-01	LUG (B) (TYPE 2)	

(4) MAIN BOARD ASSEMBLY

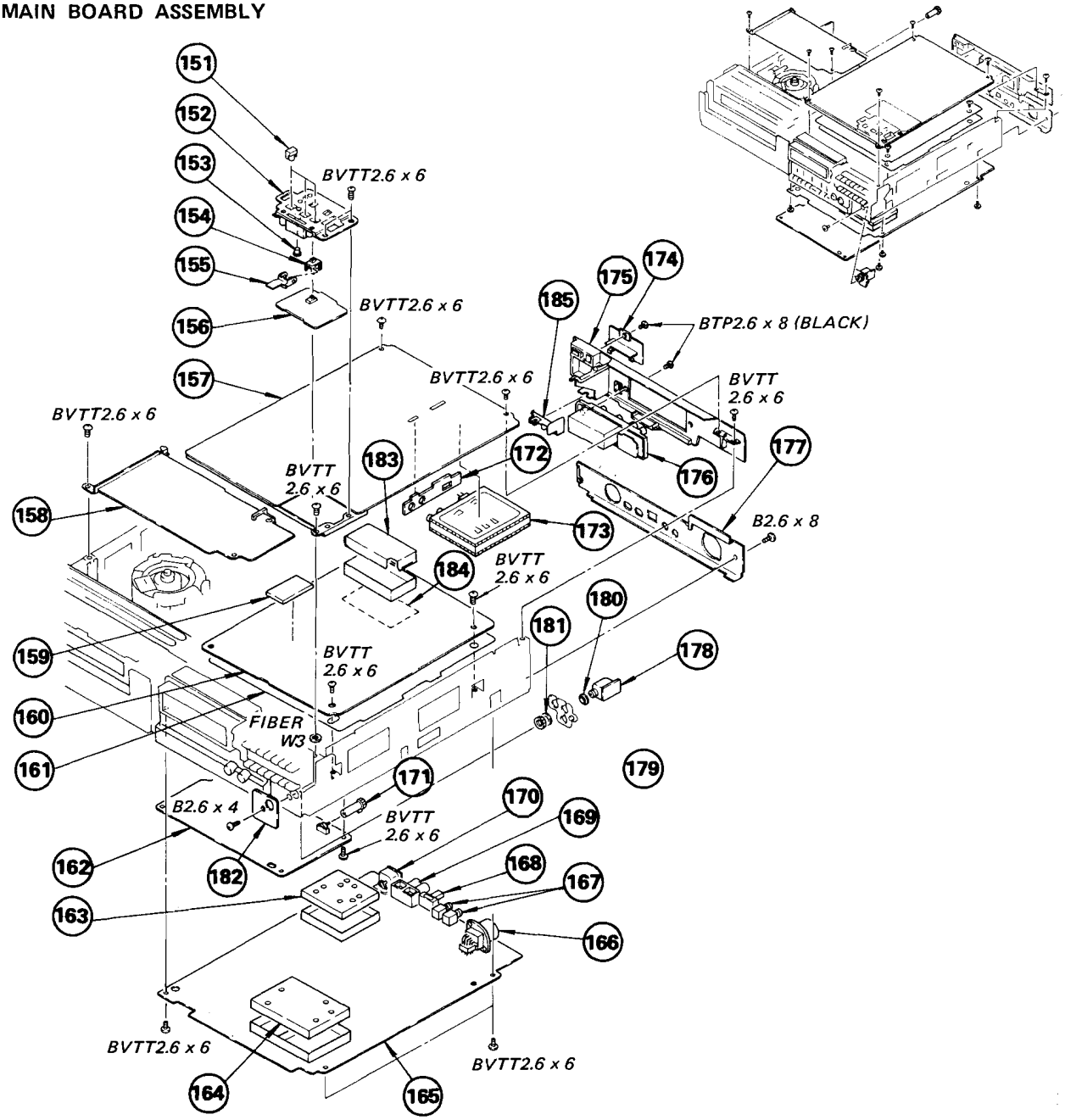

No.	Part No	Description	Remark
151	2-291-041-00	BUTTON (A), PRESET	
152	X-3670-025-0	PRESET ASSY	151,153
153	3-669-528-00	CAP, BUTTON	
154	3-670-148-00	KEY (P), SLIDE	
155	3-670-138-00	LEVER, RELEASE	
156	♦ :1-605-581-00	CH-21 BOARD	
157	♦ :A-6721-086-A	TU-21 BOARD, COMPLETE	
158	♦ :A-6717-236-A	RR-1A BOARD, COMPLETE	
159	♦ :1-606-231-00	MB-3 BOARD	
160	♦ :A-6715-131-A	SS-10A BOARD, COMPLETE	
161	♦ :3-670-123-00	INNER, INSULATOR	
162	♦ :A-6711-323-A	VL-3 BOARD, COMPLETE	
163	♦ :3-671-855-00	LID, CASE, SHIELD, VA-A	
164	♦ :3-671-852-00	LID, CASE, SHIELD, VA-V	
165	♦ :A-6711-314-A	VA-3Z BOARD, COMPLETE	
166	1-561-690-00	CONNECTOR, CAMERA 14P	
167	1-507-251-XX	JACK	
168	1-552-821-00	SWITCH, SLIDE	

No.	Part No	Description	Remark
169	1-507-742-00	JACK, PIN 2P	
170	1-561-703-00	CONNECTOR, DIN 8P	
171	3-670-149-00	KNOB, V SYNCHRONOUS	
172	♦ :1-605-575-00	TU-22 BOARD	
173	1-463-377-00	TUNER (BT-864)	
174	2-291-019-00	LID, BOOSTER	
175	3-670-160-11	PANEL (UPPER), REAR	
176	1-536-672-41	TERMINAL BOARD (WITH ANT SW)	
177	3-671-808-03	PANEL (LOWER), REAR	
178	♦ :1-606-272-00	MI-2 BOARD	
179	1-507-285-00	JACK	
180	3-670-164-00	SPACER, JACK	
181	3-701-444-11	WASHER, 6	
182	♦ :3-670-171-00	PLATE (SMALL), ORNAMENTAL	
183	♦ :X-3670-043-0	LID ASSY, SS-10 SHIELD CASE	
184	♦ :X-3670-042-0	LID ASSY, REAR, SHIELD CASE	
185	♦ :3-671-857-00	PLATE, GROUND	

(5) FRONT BOARD ASSEMBLY

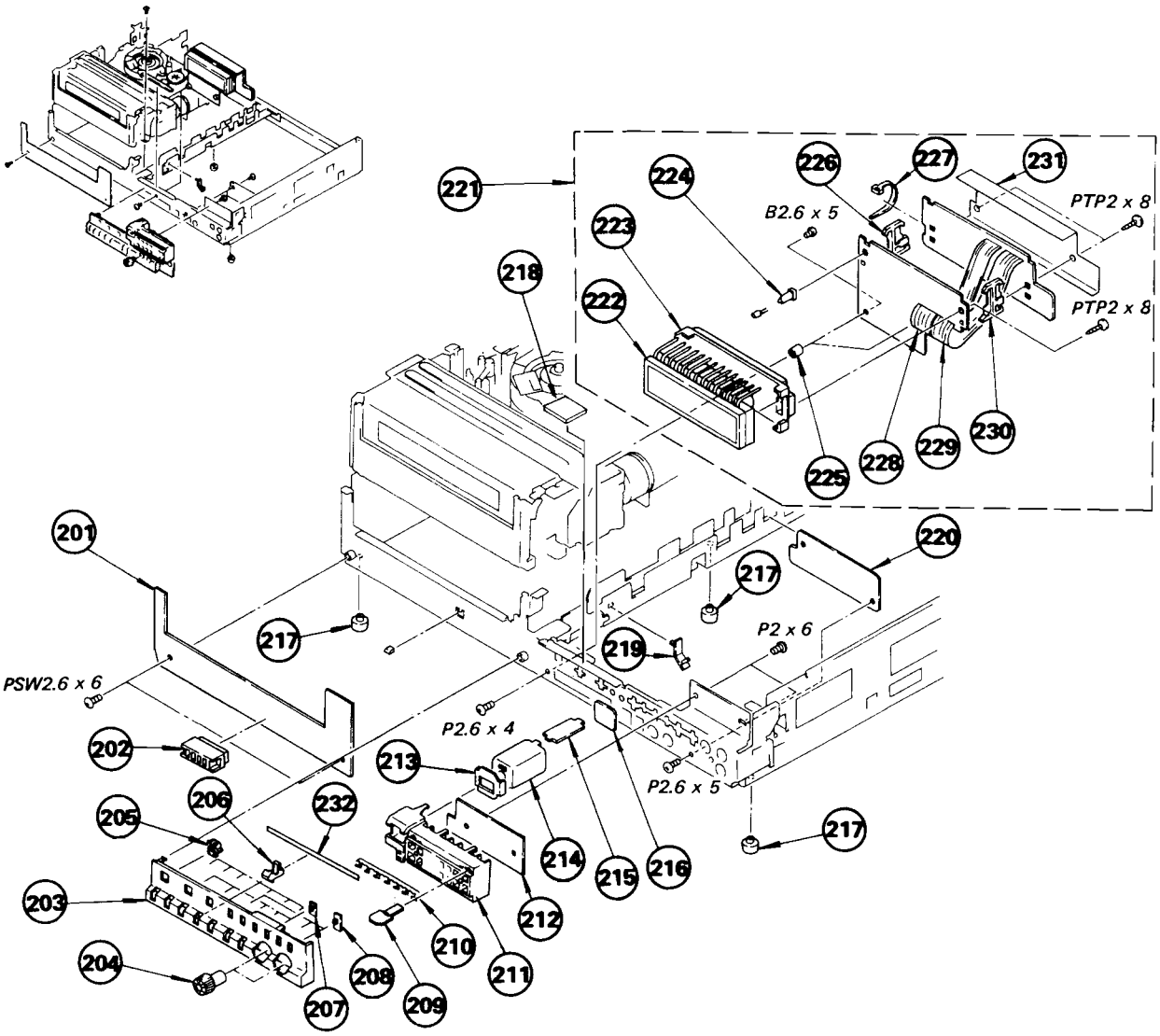

No.	Part No	Description	Remark
201	♦:A-6717-225-A	FU-3 BOARD, COMPLETE	
202	♦:3-670-094-00	HOLDER, LED, 6 GANG	
203	X-3670-051-0	PANEL ASSY, SUB, FRONT	
204	3-670-093-00	KNOB, TRACK CONTROL	
205	3-670-091-00	KEY (B), TACT	
206	3-670-090-00	KEY (A), TACT	
207	3-670-089-00	KEY (B), SLIDE	
208	3-670-088-00	KEY (A), SLIDE	
209	2-291-024-00	BUTTON, TUNER	
210	♦:2-291-025-00	SPRING, LEAF	
211	3-670-159-00	FRAME, TUNER	
212	♦:1-605-895-00	CH-22 BOARD	
213	♦:3-671-831-00	COVER, RAY CATCHER BLOCK	
214	♦:4-342-117-00	CASE, SHIELD (MAIN), R	
215	♦:1-603-976-00	N BOARD	
216	♦:4-342-118-00	LID, SHIELD CASE, R	
217	3-670-155-00	LEG	

No.	Part No.	Description	Remark
218	♦:3-675-599-01	SPACER, TIMER	
219	♦:3-701-832-00	HINGE, CIRCUIT BOARD	
220	♦:1-605-410-00	SW-12 BOARD	
221	1-548-552-12	TIMER BLOCK (TYPE 1) (222, 223, 224, 225, 226,	
221	1-548-552-21	TIMER BLOCK (TYPE 2) \ 227, 228, 229, 230, 231	
222	♦:9-982-255-00	FLUORESCENT DISPLAY	
223	♦:9-982-256-00	HOLDER, INDICATION TUBE	
224	♦:9-982-259-00	HOLDER, LED	
225	♦:9-982-257-00	SPACER, PC BOARD	
226	♦:9-982-245-00	HOLDER, PC BOARD	
227	3-701-748-00	CLAMP, HARNESS	
228	♦:9-982-061-00	CABLE, RIBBON 9P	
229	♦:9-982-260-00	CABLE, RIBBON 10P	
230	♦:9-982-254-00	HOLDER, PC BOARD	
231	♦:9-982-253-00	CASE ASS'Y SHIELD	
232	♦:3-671-865-00	CUSHION, BUTTON	

(6) CASSETTE LOADING ASSEMBLY 1

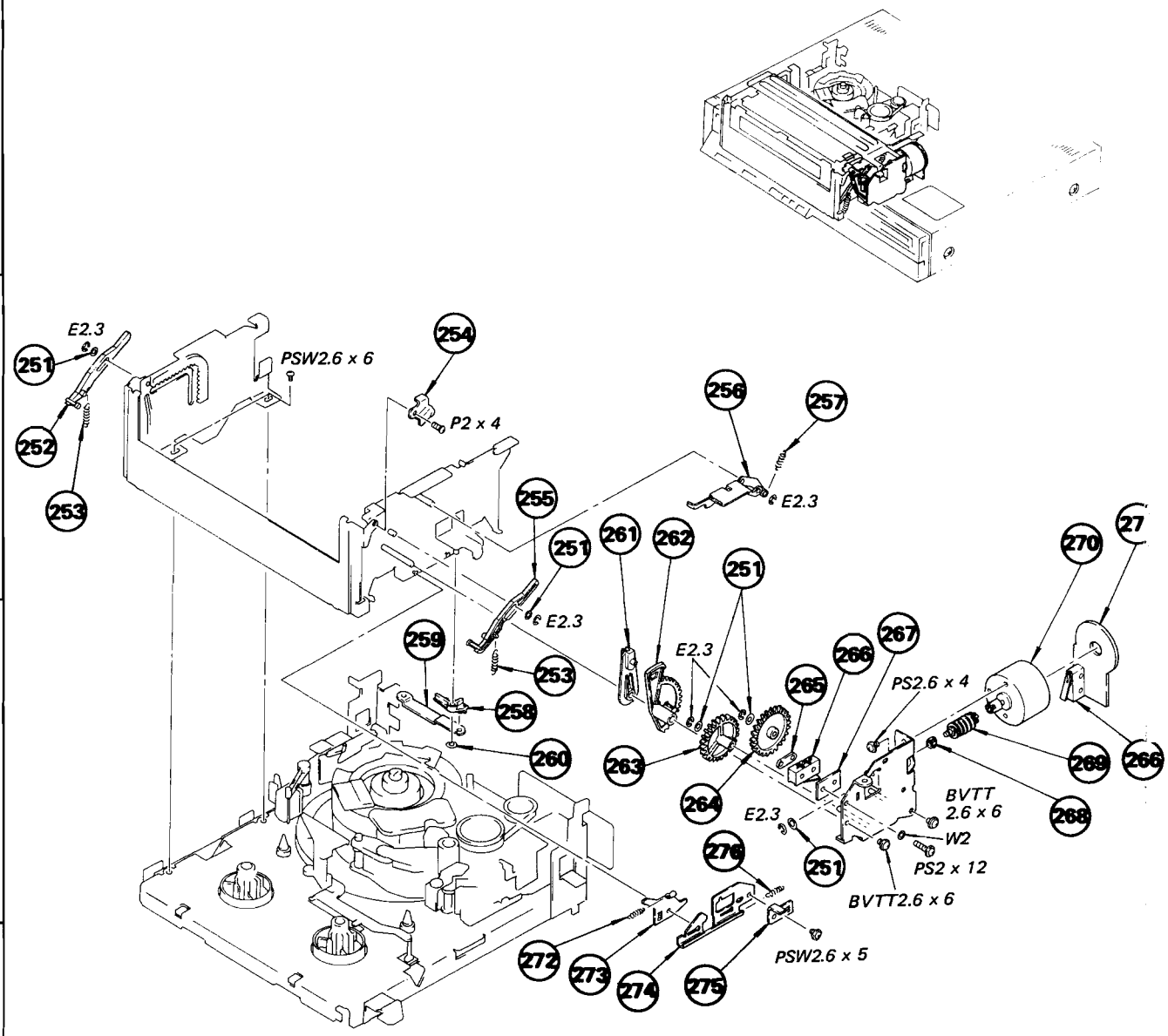

No.	Part No	Description	Remark
251	3-701-439-21	WASHER	
252	3-670-056-00	ARM (L), DOOR	
253	3-500-130-00	SPRING, TENSION	
254	♦:3-671-819-00	COVER, SECTOR GEAR	
255	3-670-057-00	ARM (R), DOOR	
256	♦:3-670-152-00	ARM, LOCK, UP	
257	3-536-767-XX	SPRING, TENSION	
258	3-670-001-00	LEVER, UNLOCK	
259	3-670-034-00	JOINT, UNLOCK	
260	3-669-465-00	WASHER (1.5), STOPPER	
261	3-670-136-00	ARM, HOLDER DRIVING	
262	3-670-151-00	GEAR, SECTOR	
263	3-670-016-00	GEAR (A)	

No.	Part No	Description	Remark
264	♦:3-670-015-00	WHEEL, WORM	
265	♦:3-646-476-00	NUT, PLATE	
266	1-552-664-00	SWITCH, MICRO	
267	3-534-263-00	INSULATOR	
268	♦:3-670-168-00	BEARING, WORM	
269	X-3670-001-0	WORM ASSY	
270	X-3670-002-0	MOTOR ASSY, FL	
271	♦:A-6728-246-A	LM-9 BOARD, COMPLETE	
272	3-530-248-XX	SPRING, TENSION	
273	♦:3-670-010-00	STOPPER, LOCK	
274	♦:3-670-009-00	PLATE, LOCK	
275	♦:3-670-011-00	PLATE, ADJUSTMENT, CD	
276	3-630-615-XX	SPRING, TENSION	

(7) CASSETTE LOADING ASSEMBLY 2

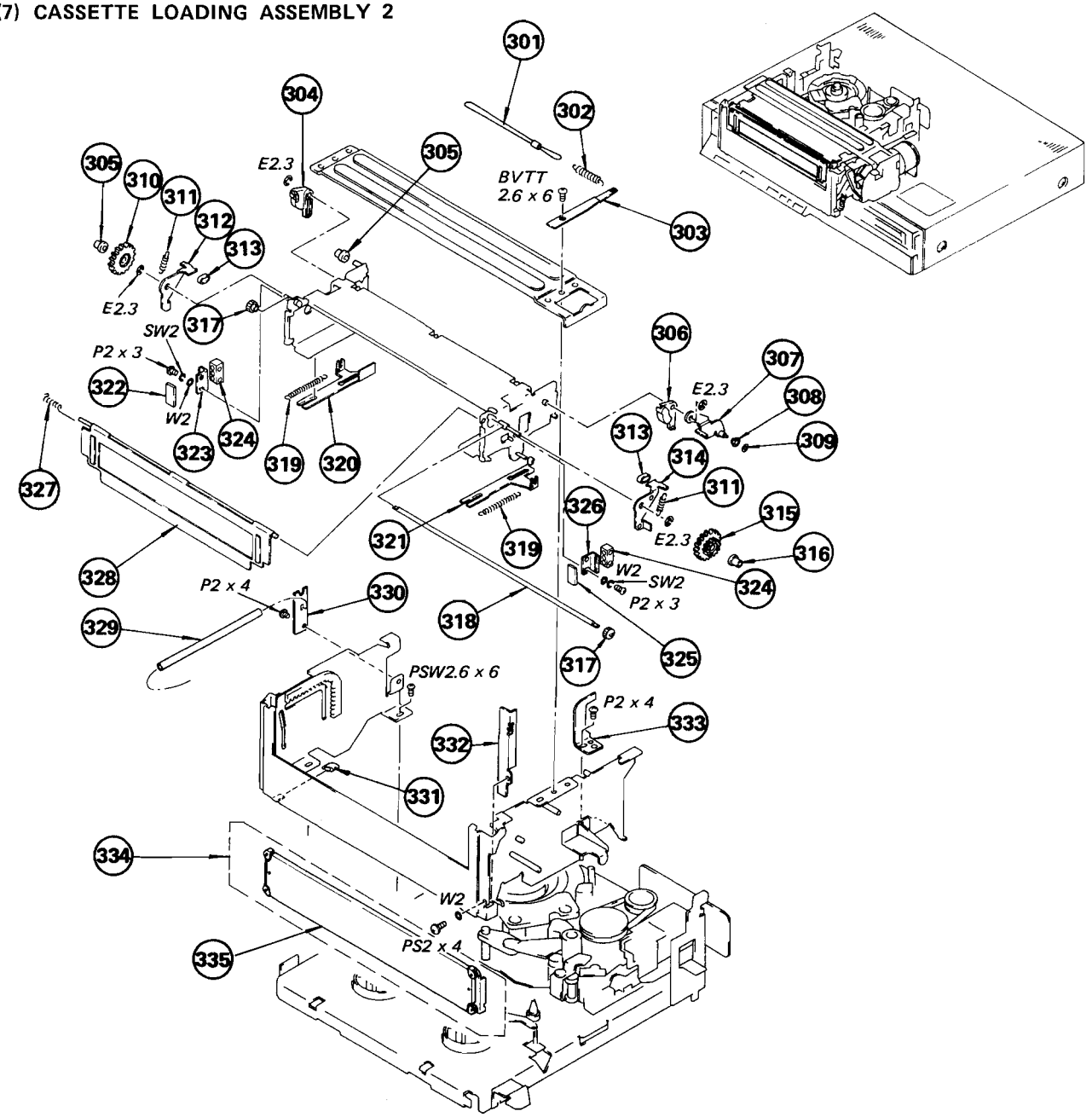

No.	Part No	Description	Remark
301	3-671-863-00	STRING, PULL, WIRE	
302	3-535-021-00	SPRING, TENSION	
303	3-671-864-00	PLATE, SPRING HOOK	
304	3-670-003-00	CAM (L), C-IN	
305	3-670-018-00	ROLLER, GUIDE	
306	3-670-004-00	CAM (R), C-IN	
307 ♦	:X-3670-005-0	ARM ASSY, OPEN LID	
308	3-670-054-00	ROLLER, OPEN LID	
309	3-669-465-00	WASHER (1.5), STOPPER	
310	3-670-006-00	GEAR (E)	
311	3-670-169-00	SPRING, TENSION	
312 ♦	:3-670-031-00	RETAINER (L), CASSETTE	
313 ♦	:3-646-334-00	CUSHION	
314 ♦	:3-670-041-00	RETAINER (R), CASSETTE	
315	3-670-005-00	GEAR (B)	
316	3-671-878-00	ROLLER (B), GUIDE	
	3-671-892-00	ROLLER (M), GUIDE	
317	3-670-007-00	GEAR (C)	

No.	Part No	Description	Remark
318 ♦	:3-670-053-00	SHAFT, JOINT	
319	3-489-310-XX	SPRING, TENSION	
320 ♦	:3-670-036-00	PLATE (L), SLIDE, C	
321 ♦	:3-670-037-00	PLATE (R), SLIDE, C	
322 ♦	:1-605-111-00	CI-2 BOARD	
323 ♦	:3-670-039-00	HOLDER (R), CSW	
324	1-553-719-00	SWITCH, MICRO	
325 ♦	:1-605-112-00	CI-3 BOARD	
326 ♦	:3-670-038-00	HOLDER (L), CSW	
327	3-670-058-00	SPRING, LEAF	
328	3-670-150-21	PLATE, BLIND	
329 ♦	:3-670-170-00	TUBE, RUBBER	
330 ♦	:A-6728-247-A	RL-4 BOARD, COMPLETE	
331	3-573-469-00	RETAINER, LEAD, SD	
332 ♦	:3-670-032-00	RAIL (R)	
333 ♦	:3-670-012-00	OPEN LID	
334	X-3670-044-0	DOOR ASSY, CASSETTE	335
335	3-670-110-11	PLATE, ORNAMENTAL, CASSETTE DOOR	

(8) CHASSIS ASSEMBLY 1

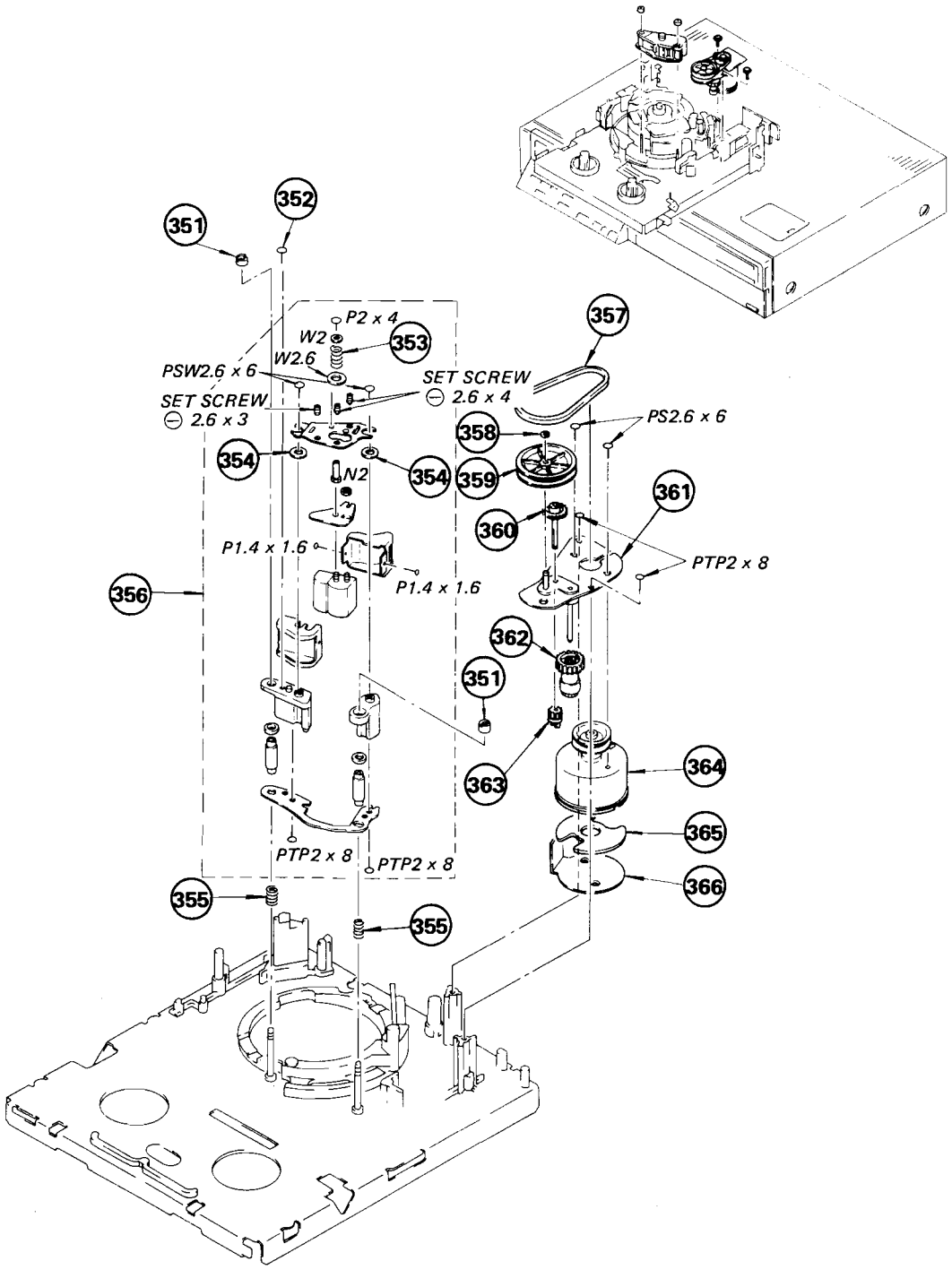

No.	Part No	Description	Remark
351	3-669-318-00	NUT, ADJUSTMENT, GUIDE	
352	3-669-480-11	+ PTPWH 2	
353	♦ :3-669-316-00	SPRING, COMPRESSION	
354	3-669-598-00	WASHER, CTL	
355	3-669-317-00	SPRING, COMPRESSION	
356	A-6761-043-A	ACE ASSY (M-2)	
357	3-669-327-00	BELT, RUBBER	
358	3-669-465-00	WASHER (1.5), STOPPER	
359	3-669-328-00	PULLEY, GEAR	
360	3-669-332-00	GEAR (BA)	
361	X-3669-324-0	CHASSIS ASSY, MOTOR, L	
362	X-3669-321-0	GEAR (C) ASSY	
363	3-669-333-00	GEAR (BC)	
364	♦ :A-6737-090-A	ASSY, L MOTOR	
365	♦ :A-6728-243-A	LM-8 BOARD, COMPLETE	
366	♦ :3-669-613-00	INSULATOR, L MOTOR	

(9) CHASSIS ASSEMBLY 2

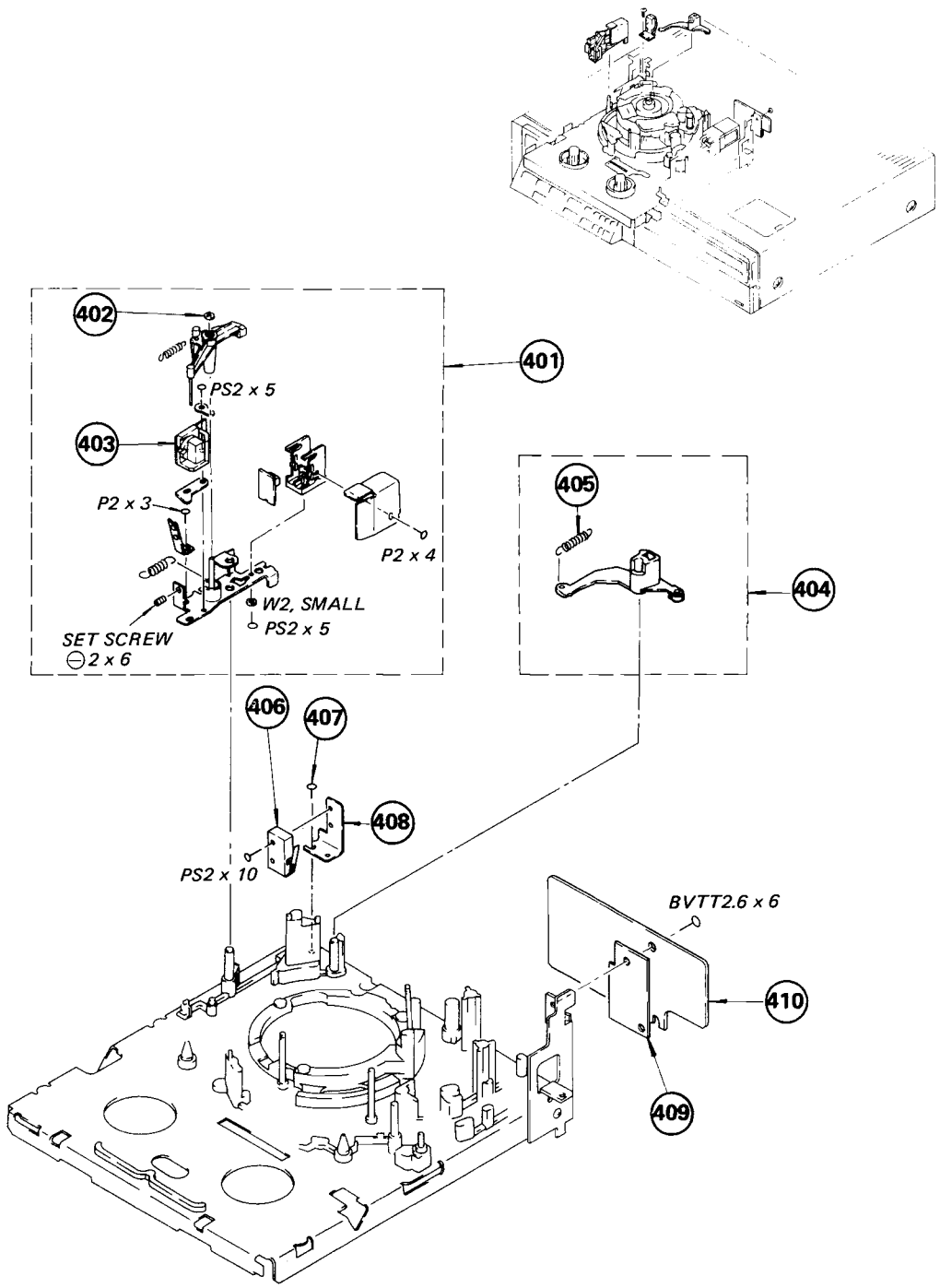

No.	Part No	Description	Remark
401	A-6742-037-A	TP ASSY	
402	3-669-465-00	WASHER (1.5), STOPPER	
403	1-235-054-21	COIL, SENSOR, S	
404	X-3669-351-0	ARM ASSY, LOCK	405
405	3-140-194-XX	SPRING, TENSION	

No.	Part No	Description	Remark
406	1-552-664-00	SWITCH, MICRO	
407	3-669-607-00	+PSW (SMALL ROUND) 2.6	
408 ♦	:3-669-354-00	BRACKET, SWITCH, LE	
409 ♦	:3-670-167-00	INSULATOR	
410 ♦	:1-606-001-00	RL-7 BOARD	

(10) CHASSIS ASSEMBLY 3

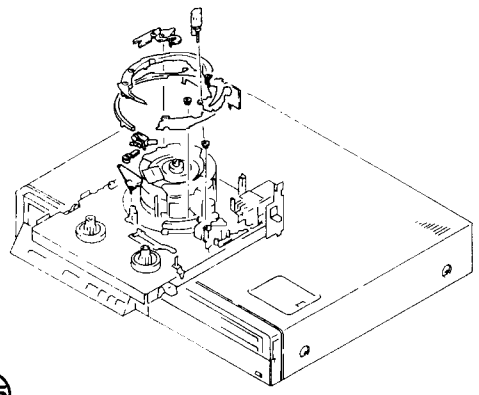

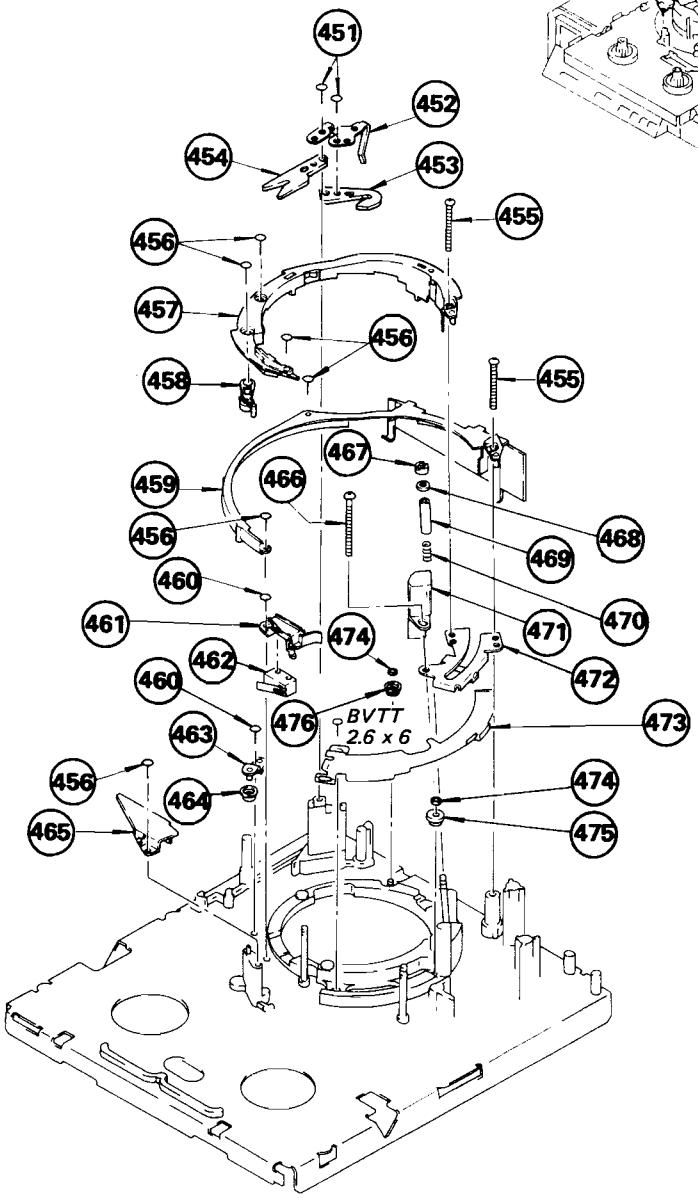

No.	Part No	Description	Remark
451	3-669-480-00	+ PTPWH 2	
452 ♦	:3-669-621-00	PLATE, GROUND, TAPE GUIDE	
453 ♦	:3-672-507-00	PLATE (3-1), ADJUSTMENT	
454 ♦	:3-669-618-00	PLATE (2), ADJUST	
455	3-669-466-00	SCREW (M 2.6)	
456	3-669-480-11	+ PTPWH 2	
457 ♦	:3-669-584-00	GUIDE (1), SHUTTLE	
458	X-3669-327-0	ARM ASSY, SWITCH, ULE	
459 ♦	:3-669-585-00	GUIDE (2), SHUTTLE	
460	3-669-607-11	+PSW (SMALL ROUND) (2.6)	
461 ♦	:3-669-355-00	HOLDER, SWITCH, ULE	
462	1-553-718-00	SWITCH, MICRO	
463 ♦	:X-3669-329-0	PLATE ASSY, ADJUSTMENT	
464	3-669-360-00	ROLLER, RING	
465 ♦	:3-669-476-04	PLATE, GUIDE	
466	3-669-606-00	SCREW (2.6)	
467	3-669-446-00	NUT, GUIDE, NO. 6	
468	3-669-447-00	FLANGE, GUIDE, NO. 6	
469	3-669-445-00	SPACER, GUIDE, NO. 6	
470	3-669-615-00	SPRING, COMPRESSION	
471	8-825-508-10	HEAD, FE	
472 ♦	:X-3669-313-0	BASE ASSY, SLANT	
473 ♦	:3-669-477-00	LINER, LINK, PIN	
474	3-669-465-00	WASHER (1.5), STOPPER	
475	3-669-597-00	ROLLER (B), RING	
476	3-669-630-00	ROLLER (C), RING	

(11) CHASSIS ASSEMBLY 4

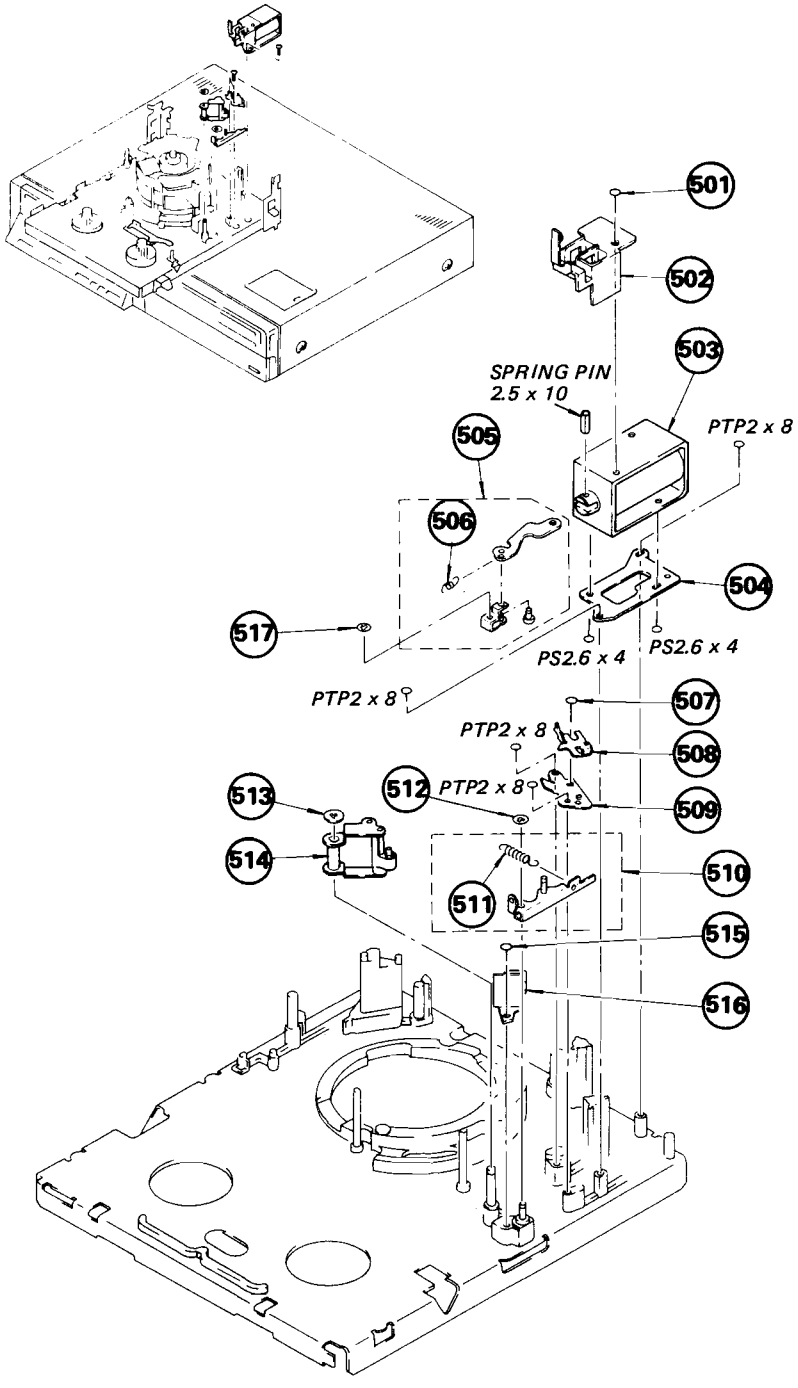

No.	Part No	Description	Remark
501	3-669-607-11	+PSW (SMALL ROUND) (2.6)	
502 ♦	:3-671-827-00	CLAMP (D), HARNESS	
503	1-454-282-00	SOLENOID, PLUNGER	
504 ♦	:3-669-459-00	BRACKET, SOLENOID	
505	X-3669-365-0	ARM ASSY, PINCH SOLENOID	506
506	3-669-440-00	SPRING, TENSION	
507	3-669-607-31	+PSW (SMALL ROUND) (2.6)	
508 ♦	:3-669-462-00	PLATE, ADJUSTMENT, LIMITER, PINCH	
509 ♦	:3-669-349-00	PLATE, LOCK, T	
510 ♦	:X-3669-379-0	ARM (P) ASSY, PINCH LIMITER	511
511	3-465-159-XX	SPRING, TENSION	
512	3-669-595-00	WASHER (2), STOPPER	
513	3-669-596-00	WASHER (2.3), STOPPER	
514 ♦	:X-3669-309-0	ARM ASSY, PRESS, PINCH	
515	3-669-480-11	+ PTPWH 2	
516	1-235-055-21	COIL SENSOR, T	
517	3-669-465-00	WASHER (1.5), STOPPER	

(12) DRUM ASSEMBLY

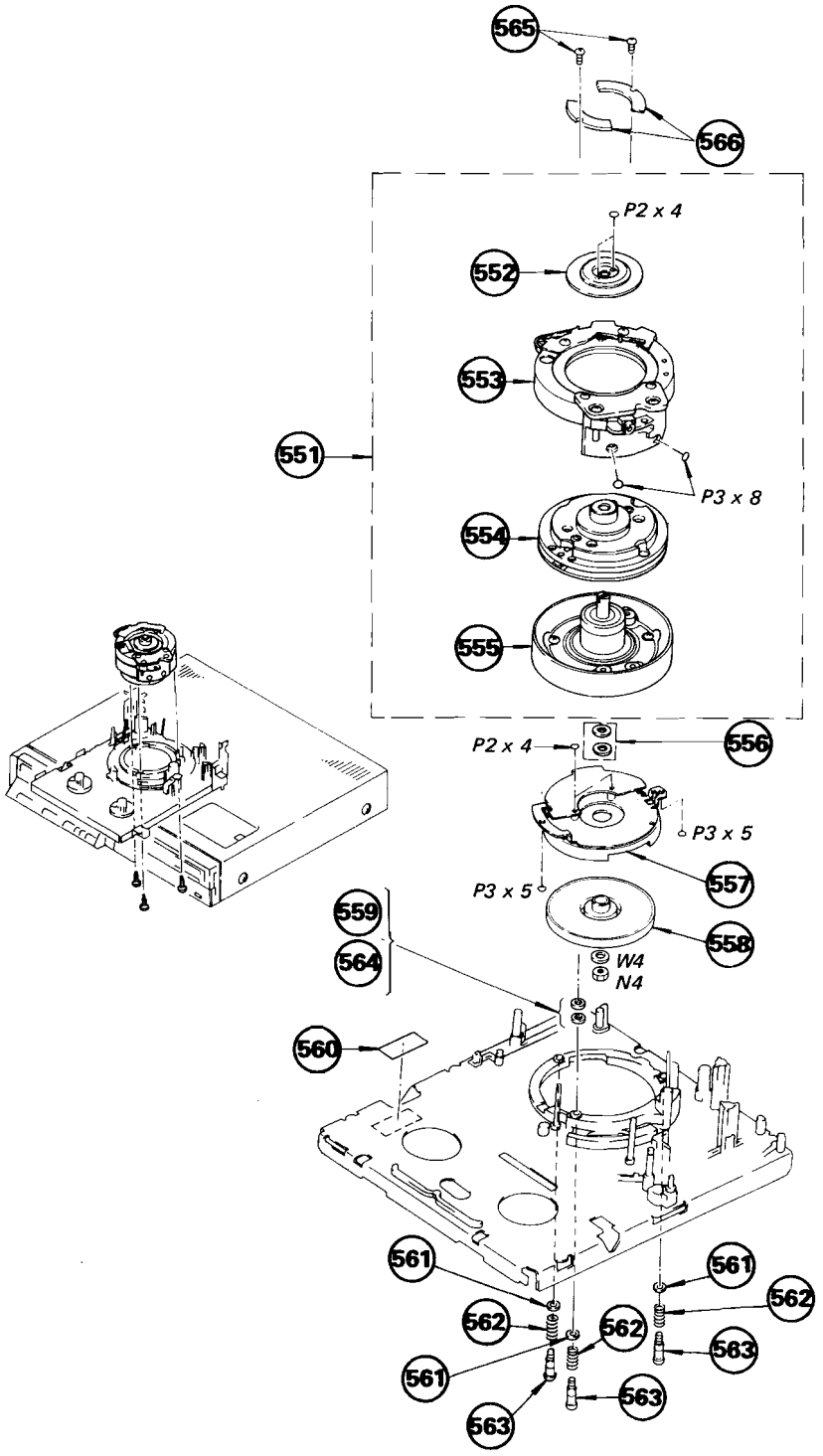

No.	Part No	Description	Remark
551	A-6050-116-A	DRUM ASS'Y DSH-16A-R	
552	X-3669-106-0	DAMPER ASS'Y	
553	A-6760-064-A	DRUM ASS'Y, UPPER	
554	A-6762-063-A	DISK ASS'Y	
555	A-6762-060-B	FLANGE ASS'Y LOWER DRUM	
556	X-3669-105-0	SPACER BLOCK ASS'Y	
557	X-2621-204-2	STATOR ASS'Y, DRUM	
558	X-2621-202-0	ROTAR ASS'Y, DRUM	

No.	Part No	Description	Remark
559 ♦	:3-669-646-00	SPACER, DRUM	
560	3-701-703-00	KODA ID MARK	
561	3-669-600-11	WASHER, FLAT (3.5)	
562	3-429-123-00	SPRING	
563	3-669-302-00	SCREW, FITTING	
564 ♦	:3-669-646-11	SPACER, DRUM	
565	3-669-696-00	SCREW, WEIGHT (M2.6X6)	
566 ♦	:3-669-684-00	WEIGHT	

(13) CHASSIS ASSEMBLY 5

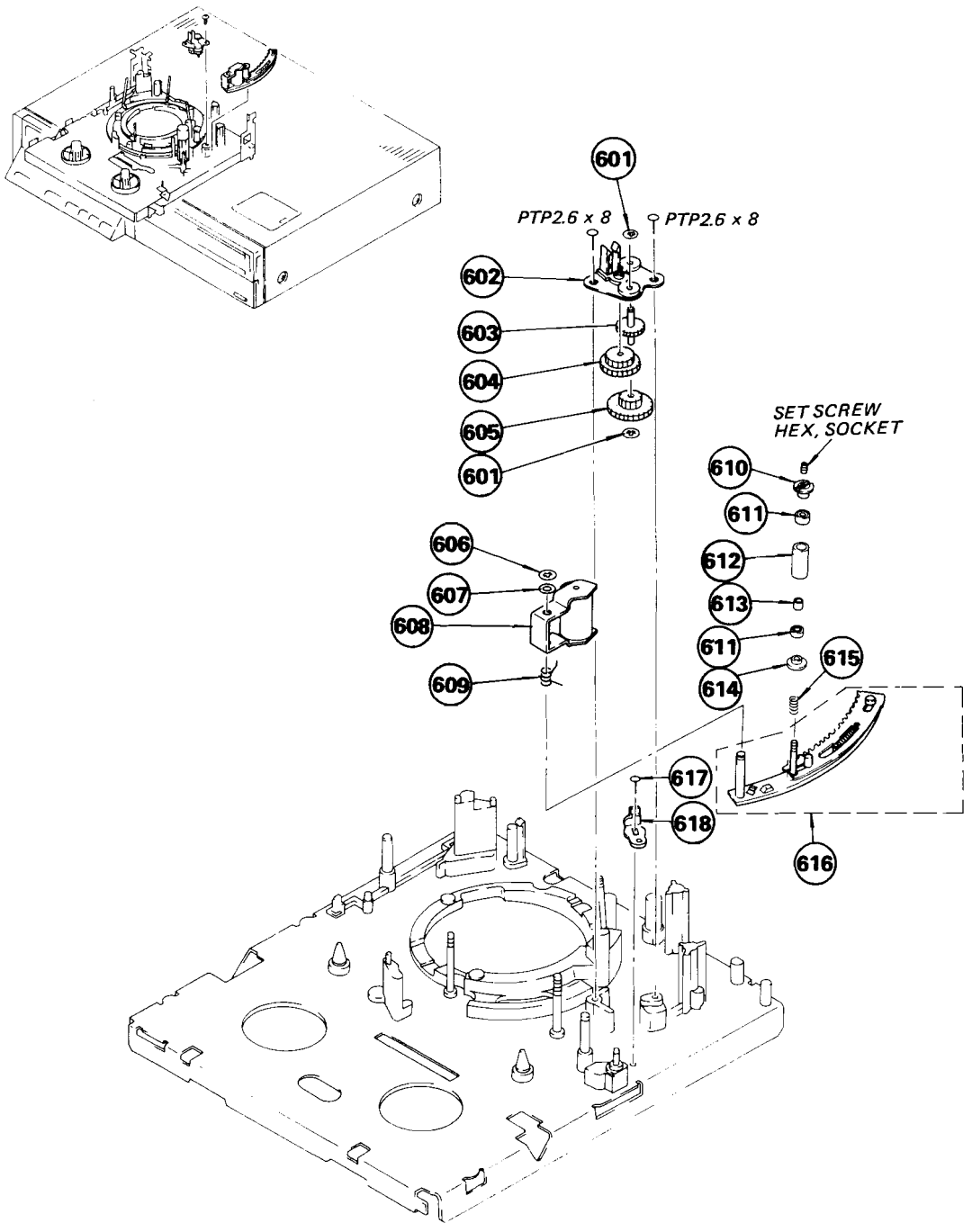

No.	Part No	Description	Remark
601	3-669-465-00	WASHER (1.5), STOPPER	
602	X-3669-326-0	CHASSIS ASSY, GEAR, DRIVE	
603	X-3669-305-0	GEAR (F) ASSY	
604	3-669-338-00	GEAR (E)	
605	3-669-337-00	GEAR (D)	
606	3-669-596-00	WASHER (2.3), STOPPER	
607	3-701-439-01	WASHER	
608	X-3669-307-0	ARM ASSY, PINCH ROLLER	
609	3-669-444-00	SPRING, TORSION	

No.	Part No	Description	Remark
610	3-669-431-00	FLANGE (UPPER), GUIDE	
611	3-669-443-00	BEARING, BALL (NO FLANGE)	
612	3-669-438-00	ROLLER, GUIDE	
613	3-657-841-31	SPACER (DIA. 2)	
614	3-669-432-00	FLANGE (LOWER), GUIDE	
615	3-669-452-00	SPRING, COMPRESSION	
616 ♦	X-3669-350-0	GEAR ASSY, SLIDER	
617	3-669-607-11	+PSW (SMALL ROUND) (2.6)	
618 ♦	3-669-350-00	STOPPER, SLIDER	

(14) CHASSIS ASSEMBLY 6

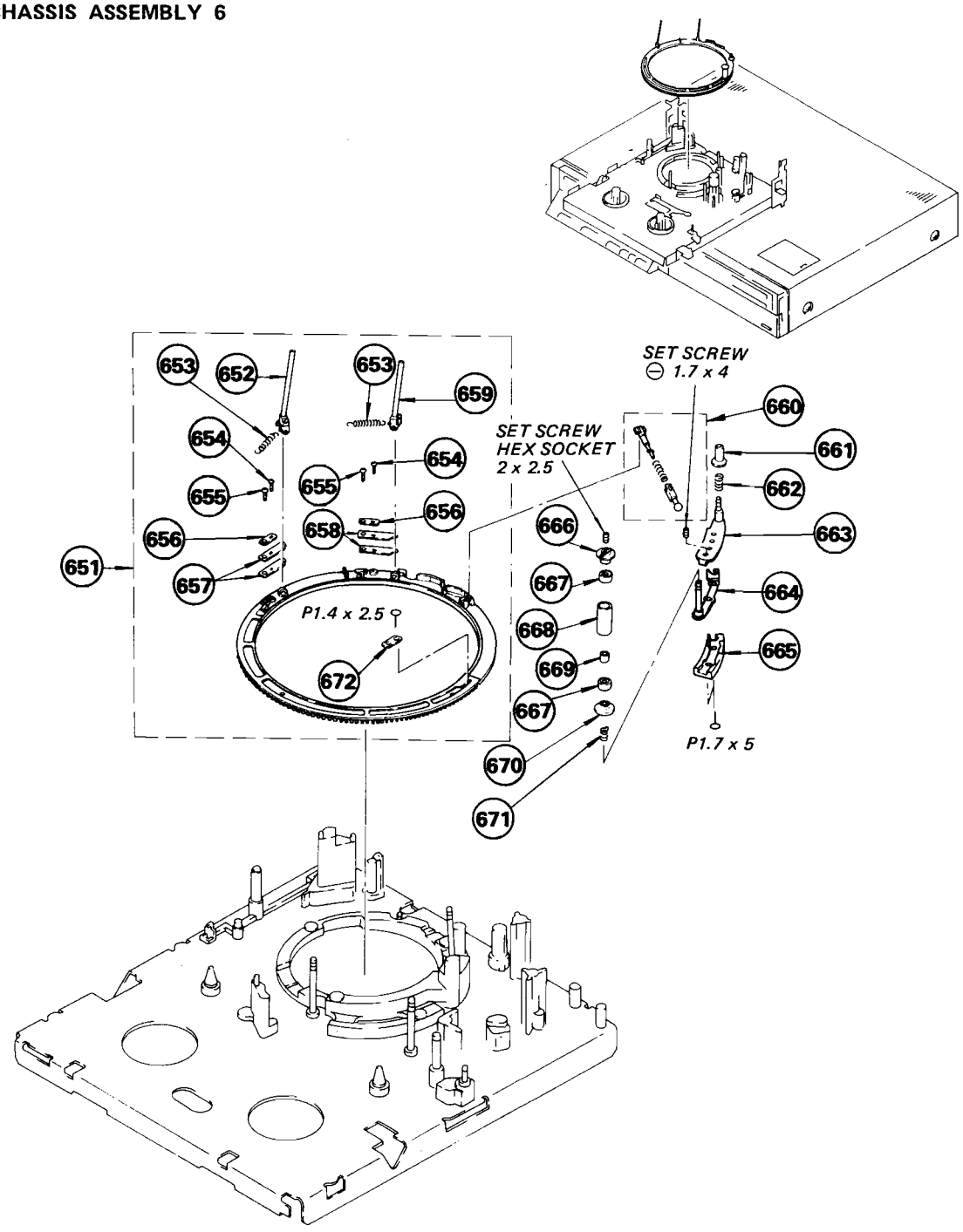

No.	Part No	Description	Remark
651	X-3669-353-0	RING ASSY, THREADING, S	652,653,654,655 656,657,658,659 672
652 ♦	:X-3669-303-0	GUIDE ASSY, NO. 2	
653	3-669-473-00	SPRING, TENSION	
654	3-669-478-00	SCREW (1X3), TAPPING	
655	3-669-479-11	SCREW (1.4X3.5), TAPPING	
656 ♦	:3-669-472-00	RETAINER, SPRING, LEAF	
657	3-669-470-00	SPRING (2), LEAF	
658	3-669-471-00	SPRING (3), LEAF, LIMITER	
659 ♦	:X-3669-304-0	GUIDE ASSY, NO. 3	
660	X-3669-316-0	ROD ASSY, PUSH	
661 ♦	:3-669-643-00	SLEEVE, GUIDE, NO. 4	
662	3-669-666-00	SPRING, COMPRESSION	
663 ♦	:X-3669-314-0	PLATE ASSY, SHUTTLE	
664 ♦	:X-3669-315-0	HEAD ASSY, TILT	
665 ♦	:3-669-540-00	BLOCK, SHUTTLE	
666	3-669-431-00	FLANGE (UPPER), GUIDE	
667	3-669-443-00	BEARING, BALL (NO FLANGE)	
668	3-669-668-00	ROLLER, GUIDE	
669	3-657-841-31	SPACER (DIA. 2)	
670	3-669-667-00	FLANGE (LOWER), GUIDE	
671	3-669-666-00	SPRING, COMPRESSION	
672 ♦	:3-669-616-00	RETAINER	

(15) CHASSIS ASSEMBLY 7

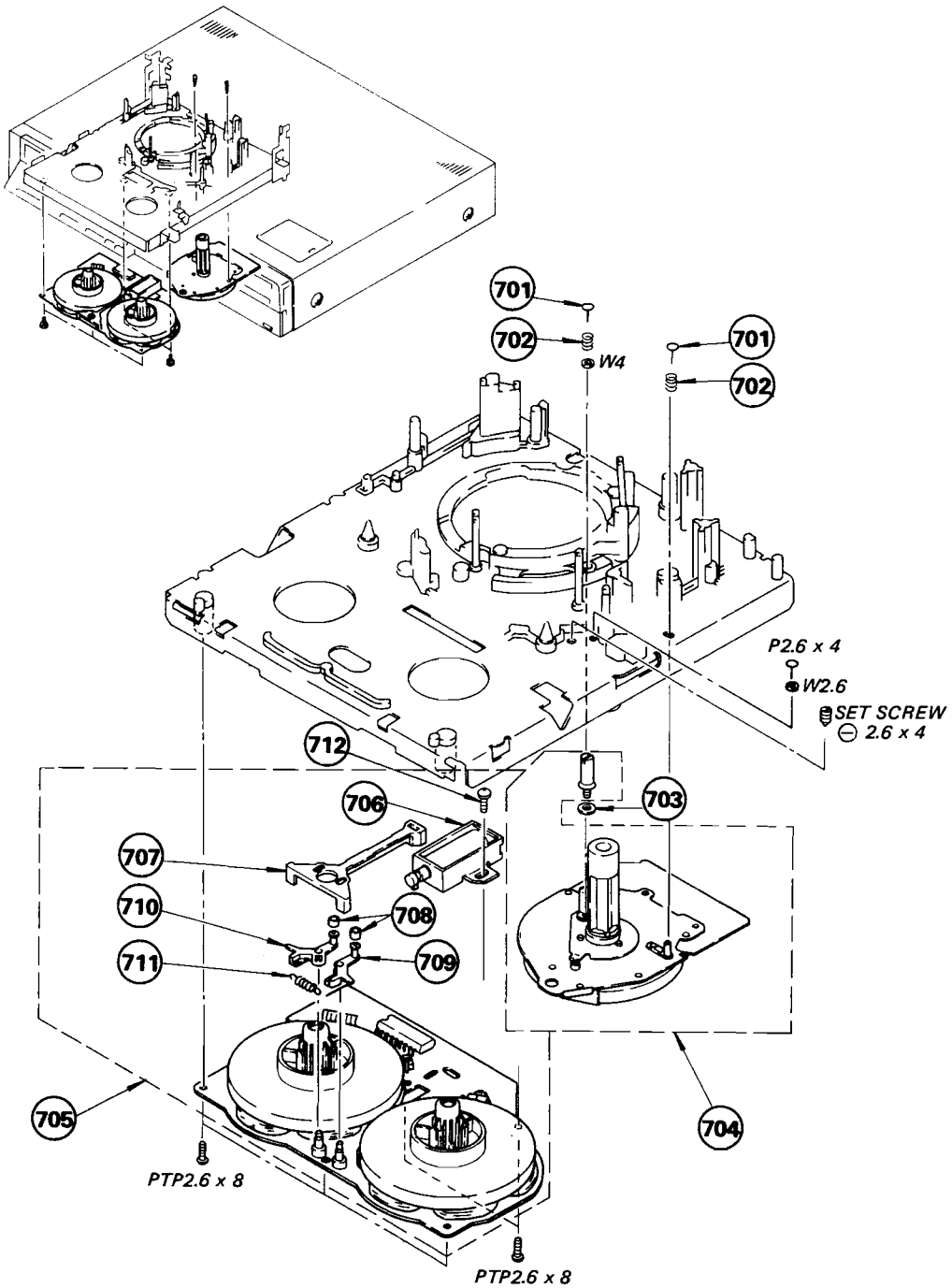

No.	Part No	Description	Remark
701	3-669-633-00	SCREW, + PW2	
702	3-669-602-00	SPRING, COMPRESSION	
703	3-669-697-00	SPACER, CAPSTAN	
704	8-838-022-11	MOTOR, DC (BHF-1900B)	
705 ♦	:A-6737-093-A	BLOCK ASSY, L MOTOR	
706	1-454-281-00	SOLENOID, PLUNGER	
707 ♦	:3-669-530-00	ARM, BRAKE	
708	3-669-305-00	BUSHING	
709 ♦	:3-669-303-00	BRAKE, T	
710 ♦	:3-669-304-00	BRAKE, S	
711	3-491-360-00	SPRING, TENSION	
712	3-669-663-00	+PSW 2.6	

(16) CHASSIS ASSEMBLY 8

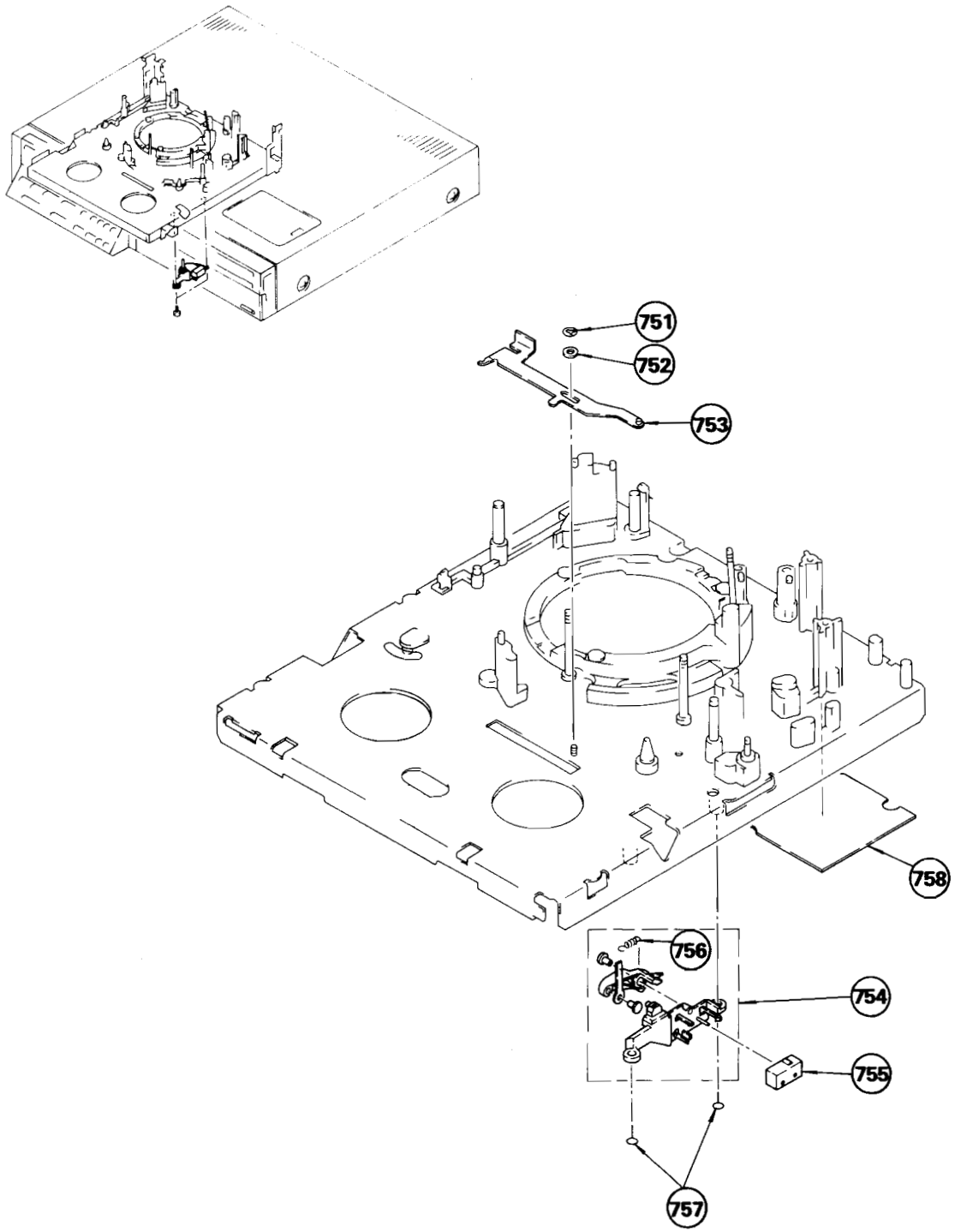

No.	Part No	Description	Remark
751	3-669-595-00	WASHER (2), STOPPER	
752	3-701-438-21	WASHER	
753 ♦	:X-3670-021-0	PLATE ASSY, UNLOCK	
754 ♦	:X-3669-323-0	MR ASSY	
755	1-553-717-00	SWITCH, MICRO	
756 ♦	:3-669-411-00	SPRING, TENSION	
757	3-669-480-11	+ PTPWH 2	
758 ♦	:3-669-599-00	INSULATOR	

SECTION 6
ELECTRICAL PARTS LIST

Ref.No	Part No	Description	Remark
	♦:A-6711-293-A	VA-3 BOARD, COMPLETE **********	
	♦:3-670-153-00	HOLDER, PCB	
	3-670-164-00	SPACER, JACK	
	♦:3-671-851-00	CASE (MAIN), SHIELD, VA-V	
	♦:3-671-853-00	LID, REAR, CASE, SHIELD, VA-V	
	♦:3-671-854-00	CASE (MAIN), SHIELD, VA-A	
	♦:3-671-856-00	LID, REAR, CASE, SHIELD, VA-A	
	3-671-893-00	CLAMP (LOW TYPE)	
	3-701-444-11	WASHER, 6	
		CAPACITOR	
C001	1-123-838-00	ELECT 1000MF 20%	6.3V
C002	1-123-838-00	ELECT 1000MF 20%	6.3V
C003	1-161-013-00	CERAMIC 0.01MF 10%	25V
C004	1-102-950-00	CERAMIC 13PF 5%	50V
C008	1-102-971-00	CERAMIC 82PF 5%	50V
C009	1-123-381-00	ELECT 2.2MF 20%	50V
C010	1-102-972-00	CERAMIC 91PF 5%	50V
C011	1-123-381-00	ELECT 2.2MF 20%	50V
C012	1-101-884-00	CERAMIC 56PF 5%	50V
C013	1-123-381-00	ELECT 2.2MF 20%	50V
C014	1-161-013-00	CERAMIC 0.01MF 10%	25V
C015	1-161-013-00	CERAMIC 0.01MF 10%	25V
C016	1-161-013-00	CERAMIC 0.01MF 10%	25V
C017	1-123-381-00	ELECT 2.2MF 20%	50V
C018	1-123-356-00	ELECT 10MF 20%	16V
C019	1-161-013-00	CERAMIC 0.01MF 10%	25V
C020	1-161-021-00	CERAMIC 0.047MF 10%	25V
C021	1-123-318-00	ELECT 33MF 20%	16V
C022	1-102-963-00	CERAMIC 33PF 5%	50V
C023	1-101-880-00	CERAMIC 47PF 5%	50V
C025	1-101-361-00	CERAMIC 150PF 5%	50V
C026	1-123-356-00	ELECT 10MF 20%	16V
C027	1-101-884-00	CERAMIC 56PF 5%	50V
C028	1-102-971-00	CERAMIC 82PF 5%	50V
C029	1-102-966-00	CERAMIC 43PF 5%	50V
C030	1-102-947-00	CERAMIC 10PF 5%	50V
C031	1-161-021-00	CERAMIC 0.047MF 10%	25V
C032	1-102-820-00	CERAMIC 330PF 5%	50V
C033	1-102-118-00	CERAMIC 0.0012MF 10%	50V
C034	1-161-021-00	CERAMIC 0.047MF 10%	25V
C035	1-102-947-00	CERAMIC 10PF 5%	50V
C036	1-123-330-00	ELECT 22MF 20%	16V
C037	1-123-356-00	ELECT 10MF 20%	16V
C038	1-161-013-00	CERAMIC 0.01MF 10%	25V
C039	1-123-380-00	ELECT 1MF 20%	50V
C040	1-123-380-00	ELECT 1MF 20%	50V
C041	1-102-965-00	CERAMIC 39PF 5%	50V
C042	1-123-340-00	ELECT 4.7MF 20%	35V
C043	1-102-074-00	CERAMIC 0.001MF 10%	50V
C044	1-123-305-00	ELECT 33MF 20%	10V
C045	1-102-074-00	CERAMIC 0.001MF 10%	50V
C046	1-102-947-00	CERAMIC 10PF 5%	50V
C047	1-123-330-00	ELECT 22MF 20%	16V
C048	1-102-947-00	CERAMIC 10PF 5%	50V
C049	1-102-947-00	CERAMIC 10PF 5%	50V
C050	1-123-330-00	ELECT 22MF 20%	16V
C051	1-123-340-00	ELECT 4.7MF 20%	35V
C052	1-123-330-00	ELECT 22MF 20%	16V
C053	1-123-330-00	ELECT 22MF 20%	16V
C054	1-123-330-00	ELECT 22MF 20%	16V
C055	1-102-962-00	CERAMIC 30PF 5%	50V
C056	1-101-888-00	CERAMIC 68PF 5%	50V
C057	1-102-936-00	CERAMIC 3PF 0.25PF	50V
C058	1-161-013-00	CERAMIC 0.01MF 10%	25V
C059	1-123-381-00	ELECT 2.2MF 20%	50V
C060	1-123-356-00	ELECT 10MF 20%	16V
C061	1-123-305-00	ELECT 33MF 20%	10V
C062	1-123-356-00	ELECT 10MF 20%	16V
C063	1-123-305-00	ELECT 33MF 20%	10V
C064	1-123-356-00	ELECT 10MF 20%	16V
C065	1-123-305-00	ELECT 33MF 20%	10V
C066	1-101-888-00	CERAMIC 68PF 5%	50V
C067	1-102-964-00	CERAMIC 36PF 5%	50V
C068	1-102-953-00	CERAMIC 18PF 5%	50V
C069	1-161-013-00	CERAMIC 0.01MF 10%	25V
C070	1-102-963-00	CERAMIC 33PF 5%	50V
C071	1-102-816-00	CERAMIC 120PF 5%	50V
C072	1-101-884-00	CERAMIC 56PF 5%	50V
C073	1-102-973-00	CERAMIC 100PF 5%	50V
C074	1-123-356-00	ELECT 10MF 20%	16V
C075	1-123-356-00	ELECT 10MF 20%	16V
C076	1-101-888-00	CERAMIC 68PF 5%	50V
C078	1-161-013-00	CERAMIC 0.01MF 10%	25V
C079	1-161-013-00	CERAMIC 0.01MF 10%	25V
C080	1-161-013-00	CERAMIC 0.01MF 10%	25V
C081	1-123-330-00	ELECT 22MF 20%	16V
C082	1-101-059-00	CERAMIC 510PF 5%	50V
C083	1-123-356-00	ELECT 10MF 20%	16V
C084	1-123-356-00	ELECT 10MF 20%	16V
C086	1-102-074-00	CERAMIC 0.001MF 10%	50V
C089	1-123-333-00	ELECT 100MF 20%	16V
C090	1-123-356-00	ELECT 10MF 20%	16V
C091	1-123-307-00	ELECT 100MF 20%	10V
C092	1-123-330-00	ELECT 22MF 20%	16V
C093	1-123-607-00	ELECT 0.1MF 20%	50V
C094	1-123-332-00	ELECT 47MF 20%	16V
C095	1-123-610-00	ELECT 0.47MF 20%	50V
C096	1-161-021-00	CERAMIC 0.047MF 10%	25V
C097	1-123-318-00	ELECT 33MF 20%	16V
C098	1-130-495-00	MYLAR 0.1MF 5%	50V
C099	1-123-356-00	ELECT 10MF 20%	16V
C100	1-123-380-00	ELECT 1MF 20%	50V
C101	1-102-977-00	CERAMIC 200PF 5%	50V

NOTE:

The components identified by shading and mark ⚠ are critical for safety. Replace only with part number specified.

Les composants identifiés par une trame et une marque ⚠ sont critiques pour la sécurité. Ne les remplacer que par une pièce portant le numéro spécifié.

When indicating parts by reference number, please include the board name.

- =>: Due to standardization, interchangeable replacements may be substituted for parts specified in the diagrams.
- Items marked " ♦ " are not stocked since they are seldom required for routine service. Some delay should be anticipated when ordering these items.
- All variable and adjustable resistors have characteristic curve B, unless otherwise noted.

CAPACITORS
- MF : μF, PF : μμF

RESISTORS
- All resistors are in ohms
- F : nonflammable

COILS
- MMH : mH, UH : μH

VA-3 BOARD

Ref.No	Part No	Description			Remark
C102	1-102-820-00	CERAMIC	330PF	5%	50V
C103	1-123-356-00	ELECT	10MF	20%	16V
C104	1-108-591-00	MYLAR	0.033MF	5%	50V
C105	1-101-059-00	CERAMIC	510PF	5%	50V
C106	1-161-021-00	CERAMIC	0.047MF	10%	25V
C107	1-108-555-00	MYLAR	0.001MF	5%	50V
C108	1-102-820-00	CERAMIC	330PF	5%	50V
C109	1-108-555-00	MYLAR	0.001MF	5%	50V
C110	1-123-356-00	ELECT	10MF	20%	16V
C111	1-161-021-00	CERAMIC	0.047MF	10%	25V
C112	1-123-306-00	ELECT	47MF	20%	10V
C113	1-123-305-00	ELECT	33MF	20%	10V
C114	1-101-888-00	CERAMIC	68PF	5%	50V
C115	1-102-963-00	CERAMIC	33PF	5%	50V
C116	1-101-059-00	CERAMIC	510PF	5%	50V
C120	1-102-116-00	CERAMIC	680PF	10%	50V
C121	1-102-116-00	CERAMIC	680PF	10%	50V
C122	1-123-380-00	ELECT	1MF	20%	50V
C123	1-123-379-00	ELECT	0.47MF	20%	50V
C124	1-123-380-00	ELECT	1MF	20%	50V
C125	1-123-356-00	ELECT	10MF	20%	16V
C126	1-123-356-00	ELECT	10MF	20%	16V
C127	1-102-951-00	CERAMIC	15PF	5%	50V
C128	1-161-013-00	CERAMIC	0.01MF	10%	25V
C129	1-101-888-00	CERAMIC	68PF	5%	50V
C130	1-101-888-00	CERAMIC	68PF	5%	50V
C131	1-161-013-00	CERAMIC	0.01MF	10%	25V
C132	1-102-978-00	CERAMIC	220PF	5%	50V
C133	1-123-379-00	ELECT	0.47MF	20%	50V
C134	1-161-013-00	CERAMIC	0.01MF	10%	25V
C135	1-123-356-00	ELECT	10MF	20%	16V
C136	1-123-382-00	ELECT	3.3MF	20%	50V
C137	1-102-074-00	CERAMIC	0.001MF	10%	50V
C138	1-161-013-00	CERAMIC	0.01MF	10%	25V
C139	1-161-013-00	CERAMIC	0.01MF	10%	25V
C140	1-161-013-00	CERAMIC	0.01MF	10%	25V
C141	1-102-074-00	CERAMIC	0.001MF	10%	50V
C142	1-161-013-00	CERAMIC	0.01MF	10%	25V
C143	1-123-356-00	ELECT	10MF	20%	16V
C144	1-102-816-00	CERAMIC	120PF	5%	50V
C145	1-161-013-00	CERAMIC	0.01MF	10%	25V
C146	1-123-380-00	ELECT	1MF	20%	50V
C149	1-161-013-00	CERAMIC	0.01MF	10%	25V
C150	1-123-340-00	ELECT	4.7MF	20%	35V
C151	1-131-345-00	ELECT(SOLID)	0.47MF	10%	25V
C152	1-161-013-00	CERAMIC	0.01MF	10%	25V
C153	1-161-013-00	CERAMIC	0.01MF	10%	25V
C155	1-161-013-00	CERAMIC	0.01MF	10%	25V
C156	1-161-013-00	CERAMIC	0.01MF	10%	25V
C157	1-123-039-00	ELECT	22MF	20%	16V
C158	1-131-347-00	ELECT(SOLID)	1MF	20%	16V
C159	1-123-356-00	ELECT	10MF	20%	16V
C160	1-123-356-00	ELECT	10MF	20%	16V

Ref.No	Part No	Description			Remark
C161	1-123-356-00	ELECT	10MF	20%	16V
C162	1-123-356-00	ELECT	10MF	20%	16V
C163	1-161-013-00	CERAMIC	0.01MF	10%	25V
C164	1-123-356-00	ELECT	10MF	20%	16V
C165	1-123-305-00	ELECT	33MF	20%	10V
C166	1-130-495-00	MYLAR	0.1MF	5%	50V
C167	1-123-381-00	ELECT	2.2MF	20%	50V
C168	1-123-382-00	ELECT	3.3MF	20%	50V
C169	1-123-382-00	ELECT	3.3MF	20%	50V
C170	1-123-330-00	ELECT	22MF	20%	16V
C171	1-102-948-00	CERAMIC	11PF	5%	50V
C172	1-123-356-00	ELECT	10MF	20%	16V
C174	1-102-074-00	CERAMIC	0.001MF	10%	50V
C176	1-102-947-00	CERAMIC	10PF	5%	50V
C178	1-108-583-00	MYLAR	0.015MF	5%	50V
C179	1-102-074-00	CERAMIC	0.001MF	10%	50V
C180	1-102-074-00	CERAMIC	0.001MF	10%	50V
C181	1-102-074-00	CERAMIC	0.001MF	10%	50V
C182	1-102-074-00	CERAMIC	0.001MF	10%	50V
C183	1-161-021-00	CERAMIC	0.047MF	10%	25V
C184	1-161-013-00	CERAMIC	0.01MF	10%	25V
C185	1-161-013-00	CERAMIC	0.01MF	10%	25V
C186	1-102-951-00	CERAMIC	15PF	5%	50V
C187	1-102-959-00	CERAMIC	22PF	5%	50V
C188	1-123-382-00	ELECT	3.3MF	20%	50V
C189	1-123-039-00	ELECT	22MF	20%	16V
C190	1-161-013-00	CERAMIC	0.01MF	10%	25V
C191	1-161-039-00	CERAMIC	0.001MF	10%	25V
C192	1-161-013-00	CERAMIC	0.01MF	10%	25V
C193	1-161-013-00	CERAMIC	0.01MF	10%	25V
C194	1-161-021-00	CERAMIC	0.047MF	10%	25V
C195	1-123-380-00	ELECT	1MF	20%	50V
C196	1-102-962-00	CERAMIC	30PF	5%	50V
C197	1-161-013-00	CERAMIC	0.01MF	10%	25V
C198	1-123-380-00	ELECT	1MF	20%	50V
C199	1-102-973-00	CERAMIC	100PF	5%	50V
C200	1-161-021-00	CERAMIC	0.047MF	10%	25V
C201	1-102-973-00	CERAMIC	100PF	5%	50V
C203	1-101-361-00	CERAMIC	150PF	5%	50V
C204	1-161-013-00	CERAMIC	0.01MF	10%	25V
C206	1-123-380-00	ELECT	1MF	20%	50V
C207	1-123-380-00	ELECT	1MF	20%	50V
C208	1-161-021-00	CERAMIC	0.047MF	10%	25V
C209	1-161-021-00	CERAMIC	0.047MF	10%	25V
C210	1-102-958-00	CERAMIC	20PF	5%	50V
C211	1-161-013-00	CERAMIC	0.01MF	10%	25V
C212	1-161-013-00	CERAMIC	0.01MF	10%	25V
C215	1-161-013-00	CERAMIC	0.01MF	10%	25V
C216	1-102-973-00	CERAMIC	100PF	5%	50V
C217	1-161-021-00	CERAMIC	0.047MF	10%	25V
C218	1-123-381-00	ELECT	2.2MF	20%	50V
C220	1-101-888-00	CERAMIC	68PF	5%	50V
C222	1-161-021-00	CERAMIC	0.047MF	10%	25V

NOTE:

The components identified by shading and mark ⚠ are critical for safety. Replace only with part number specified.

Les composants identifiés par une trame et une marque ⚠ sont critiques pour la sécurité. Ne les remplacer que par une pièce portant le numéro spécifié.

When indicating parts by reference number, please include the board name.

- =>: Due to standardization, interchangeable replacements may be substituted for parts specified in the diagrams.
- Items marked " ♦ " are not stocked since they are seldom required for routine service. Some delay should be anticipated when ordering these items.
- All variable and adjustable resistors have characteristic curve B, unless otherwise noted.

CAPACITORS
- MF : μF, PF : μμF

RESISTORS
- All resistors are in ohms
- F : nonflammable

COILS
- MMH : mH, UH : μH

Ref.No	Part No	Description			Remark
C223	1-161-063-00	CERAMIC	0.1MF	20%	25V
C224	1-102-958-00	CERAMIC	20PF	5%	50V
C226	1-161-021-00	CERAMIC	0.047MF	10%	25V
C228	1-161-021-00	CERAMIC	0.047MF	10%	25V
C230	1-123-330-00	ELECT	22MF	20%	16V
C232	1-161-013-00	CERAMIC	0.01MF	10%	25V
C301	1-102-516-00	CERAMIC	27PF	5%	50V
C302	1-161-021-00	CERAMIC	0.047MF	10%	25V
C303	1-161-021-00	CERAMIC	0.047MF	10%	25V
C304	1-102-074-00	CERAMIC	0.001MF	10%	50V
C305	1-102-074-00	CERAMIC	0.001MF	10%	50V
C306	1-161-005-00	CERAMIC	0.0022MF	10%	25V
C307	1-161-021-00	CERAMIC	0.047MF	10%	25V
C308	1-161-013-00	CERAMIC	0.01MF	10%	25V
C310	1-102-959-00	CERAMIC	22PF	5%	50V
C311	1-161-013-00	CERAMIC	0.01MF	10%	25V
C312	1-161-013-00	CERAMIC	0.01MF	10%	25V
C313	1-161-013-00	CERAMIC	0.01MF	10%	25V
C314	1-102-963-00	CERAMIC	33PF	5%	50V
C315	1-161-021-00	CERAMIC	0.047MF	10%	25V
C317	1-102-125-00	CERAMIC	0.0047MF	10%	50V
C318	1-123-340-00	ELECT	4.7MF	20%	35V
C319	1-161-013-00	CERAMIC	0.01MF	10%	25V
C320	1-102-958-00	CERAMIC	20PF	5%	50V
C321	1-161-021-00	CERAMIC	0.047MF	10%	25V
C323	1-108-573-00	MYLAR	0.0056MF	5%	50V
C325	1-123-332-00	ELECT	47MF	20%	16V
C328	1-161-021-00	CERAMIC	0.047MF	10%	25V
C329	1-161-021-00	CERAMIC	0.047MF	10%	25V
C332	1-102-953-00	CERAMIC	18PF	5%	50V
C333	1-102-961-00	CERAMIC	27PF	5%	50V
C500	1-108-555-00	MYLAR	0.001MF	5%	50V
C501	1-108-561-00	MYLAR	0.0018MF	5%	50V
C502	1-102-116-00	CERAMIC	680PF	10%	50V
C503	1-123-294-00	ELECT	47MF	20%	6.3V
C504	1-123-306-00	ELECT	47MF	20%	10V
C505	1-123-356-00	ELECT	10MF	20%	16V
C506	1-108-587-00	MYLAR	0.022MF	5%	50V
C507	1-102-963-00	CERAMIC	33PF	5%	50V
C508	1-123-356-00	ELECT	10MF	20%	16V
C509	1-108-593-00	MYLAR	0.039MF	5%	50V
C510	1-108-583-00	MYLAR	0.015MF	5%	50V
C511	1-108-591-00	MYLAR	0.033MF	5%	50V
C512	1-123-330-00	ELECT	22MF	20%	16V
C513	1-102-980-00	CERAMIC	270PF	5%	50V
C514	1-123-356-00	ELECT	10MF	20%	16V
C515	1-123-379-00	ELECT	0.47MF	20%	50V
C516	1-129-710-00	FILM	0.0047MF	10%	630V
C517	1-108-571-00	MYLAR	0.0047MF	5%	50V
C518	1-108-567-00	MYLAR	0.0033MF	5%	50V
C519	1-123-306-00	ELECT	47MF	20%	10V
C520	1-123-356-00	ELECT	10MF	20%	16V
C521	1-123-381-00	ELECT	2.2MF	20%	50V
C522	1-123-381-00	ELECT	2.2MF	20%	50V
C523	1-123-381-00	ELECT	2.2MF	20%	50V
C524	1-123-306-00	ELECT	47MF	20%	10V
C525	1-123-356-00	ELECT	10MF	20%	16V
C526	1-108-555-00	MYLAR	0.001MF	5%	50V
C527	1-102-824-00	CERAMIC	430PF	5%	50V
C528	1-123-356-00	ELECT	10MF	20%	16V
C529	1-123-356-00	ELECT	10MF	20%	16V
C530	1-123-307-00	ELECT	100MF	20%	10V
C531	1-123-328-00	ELECT	4.7MF	20%	25V
C532	1-123-328-00	ELECT	4.7MF	20%	25V
C534	1-123-380-00	ELECT	1MF	20%	50V
C537	1-123-356-00	ELECT	10MF	20%	16V
C541	1-108-583-00	MYLAR	0.015MF	5%	50V
C542	1-108-579-00	MYLAR	0.01MF	5%	50V
C543	1-108-599-00	MYLAR	0.068MF	5%	50V
C544	1-102-961-00	CERAMIC	27PF	5%	50V
C545	1-108-555-00	MYLAR	0.001MF	5%	50V
C546	1-123-356-00	ELECT	10MF	20%	16V
C547	1-123-332-00	ELECT	47MF	20%	16V
C549	1-123-356-00	ELECT	10MF	20%	16V
C550	1-123-356-00	ELECT	10MF	20%	16V
C551	1-102-973-00	CERAMIC	100PF	5%	50V
C552	1-123-380-00	ELECT	1MF	20%	50V
C553	1-102-973-00	CERAMIC	100PF	5%	50V
C553	1-108-571-00	MYLAR	0.0047MF	5%	50V
C554	1-102-118-00	CERAMIC	0.0012MF	10%	50V
C555	1-123-356-00	ELECT	10MF	20%	16V
C556	1-123-356-00	ELECT	10MF	20%	16V
C557	1-123-356-00	ELECT	10MF	20%	16V
C558	1-123-356-00	ELECT	10MF	20%	16V
C559	1-123-380-00	ELECT	1MF	20%	50V
C560	1-102-961-00	CERAMIC	27PF	5%	50V
C561	1-123-356-00	ELECT	10MF	20%	16V
C562	1-123-332-00	ELECT	47MF	20%	16V
C563	1-161-021-00	CERAMIC	0.047MF	10%	25V
C564	1-161-021-00	CERAMIC	0.047MF	10%	25V
C565	1-161-021-00	CERAMIC	0.047MF	10%	25V
C566	1-161-021-00	CERAMIC	0.047MF	10%	25V
C567	1-123-356-00	ELECT	10MF	20%	16V
C568	1-161-021-00	CERAMIC	0.047MF	10%	25V
C570	1-123-356-00	ELECT	10MF	20%	16V
C571	1-123-356-00	ELECT	10MF	20%	16V
C583	1-161-021-00	CERAMIC	0.047MF	10%	25V
C591	1-123-294-00	ELECT	47MF	20%	6.3V
C592	1-123-318-00	ELECT	33MF	20%	16V

FILTER

CF001	1-527-831-00	FILTER, CERAMIC
CF002	1-527-823-00	FILTER, CERAMIC
CF003	1-527-823-00	FILTER, CERAMIC
CF004	1-231-302-00	CERAMIC FILTER (4.27MHZ)

NOTE:

The components identified by shading and mark ⚠ are critical for safety. Replace only with part number specified.

Les composants identifiés par une trame et une marque ⚠ sont critiques pour la sécurité. Ne les remplacer que par une pièce portant le numéro spécifié.

When indicating parts by reference number, please include the board name.

- =>: Due to standardization, interchangeable replacements may be substituted for parts specified in the diagrams.
- Items marked " ♦ " are not stocked since they are seldom required for routine service. Some delay should be anticipated when ordering these items.
- All variable and adjustable resistors have characteristic curve B, unless otherwise noted.

CAPACITORS
- MF : μF, PF : μμF

RESISTORS
- All resistors are in ohms
- F : nonflammable

COILS
- MMH : mH, UH : μH

VA-3 BOARD

Ref.No	Part No	Description	Remark
		CONNECTOR	
CN001♦	1-560-471-00	PIN, CONNECTOR 10P	
CN002♦	1-560-461-00	PIN, CONNECTOR 5P	
CN003♦	1-560-470-00	PIN, CONNECTOR 8P	
CN004♦	1-560-471-00	PIN, CONNECTOR 10P	
CN005♦	1-560-469-00	PIN, CONNECTOR 6P	
CN006♦	1-560-467-00	PIN, CONNECTOR 4P	
CN007	1-561-690-00	CONNECTOR, CAMERA 14P	
CN009♦	1-560-468-00	PIN, CONNECTOR 5P	
CN011♦	1-560-470-00	PIN, CONNECTOR 8P	
CN012	1-561-703-00	CONNECTOR, DIN 8P	
CN500♦	1-560-469-00	PIN, CONNECTOR 6P	
CN505♦	1-560-466-00	PIN, CONNECTOR 3P	
CN506♦	1-560-469-00	PIN, CONNECTOR 6P	
CN507♦	1-560-468-00	PIN, CONNECTOR 5P	
CN509♦	1-560-469-00	PIN, CONNECTOR 6P	
CN510	1-507-251-XX	JACK	
CN511	1-507-251-XX	JACK	
		TRIMER	
CT500	1-141-215-00	CAP, TRIMER 100PF	
		DIODE	
D001	8-719-911-19	DIODE 1SS119	
D002	8-719-911-19	DIODE 1SS119	
D003	8-719-911-19	DIODE 1SS119	
D004	8-719-911-19	DIODE 1SS119	
D005	8-719-911-19	DIODE 1SS119	
D006	8-719-911-19	DIODE 1SS119	
D007	8-719-911-19	DIODE 1SS119	
D008	8-719-113-07	DIODE RD13E-B	
D009	8-719-113-07	DIODE RD13E-B	
D010	8-719-113-07	DIODE RD13E-B	
D011	8-719-118-07	DIODE RD18E-B	
D012	8-719-118-07	DIODE RD18E-B	
D013	8-719-113-07	DIODE RD13E-B	
D014	8-719-113-07	DIODE RD13E-B	
D015	8-719-113-07	DIODE RD13E-B	
D016	8-719-113-07	DIODE RD13E-B	
D017	8-719-113-07	DIODE RD13E-B	
D018	8-719-911-19	DIODE 1SS119	
D019	8-719-191-07	DIODE RD9.1E-B	
D020	8-719-191-07	DIODE RD9.1E-B	
D021	8-719-911-19	DIODE 1SS119	
D022	8-719-911-19	DIODE 1SS119	
D023	8-719-113-07	DIODE RD13E-B	
D024	8-719-911-19	DIODE 1SS119	
D025	8-719-911-19	DIODE 1SS119	
D500	8-719-911-19	DIODE 1SS119	
D501	8-719-911-19	DIODE 1SS119	
D502	8-719-911-19	DIODE 1SS119	
D503	8-719-911-19	DIODE 1SS119	
D504	8-719-911-19	DIODE 1SS119	
D505	8-719-911-19	DIODE 1SS119	
D506	8-719-911-19	DIODE 1SS119	
D507	8-719-911-19	DIODE 1SS119	
D508	8-719-911-19	DIODE 1SS119	
D510	8-719-911-19	DIODE 1SS119	
D513	8-719-911-19	DIODE 1SS119	
D514	8-719-911-19	DIODE 1SS119	
D515	=>8-719-911-19	DIODE 1SS119	
D516	=>8-719-911-19	DIODE 1SS119	
D517	=>8-719-911-19	DIODE 1SS119	
D518	8-719-911-19	DIODE 1SS119	
D519	8-719-911-19	DIODE 1SS119	
D540	8-719-911-19	DIODE 1SS119	
		DELAY LINE	
DL001	1-415-243-00	DELAY LINE (1H)	
DL002	1-415-065-00	DELAY LINE (1H)	
DL003	1-415-244-21	DELAY LINE (1/2H)	
DL004	1-415-245-00	DELAY LINE (1/4H)	
		IC	
IC001	8-743-945-10	IC BX-3945-1	
IC002	8-743-946-10	IC BX-3946-1	
IC003	8-759-608-64	IC CX-864	
IC004	8-759-608-65	IC CX-865	
IC005	8-758-660-00	IC CX-866	
IC006	8-759-208-67	IC CX-867	
IC007	8-759-908-68	IC CX-868	
IC008	8-758-690-00	IC CX-869	
IC010	8-759-919-05	IC CX-7905A	
IC011	8-743-955-00	IC BX-3955	
IC012	8-743-956-10	IC BX-3956-1	
IC014	8-743-958-10	IC BX-3958-1	
IC015	8-743-959-10	IC BX-3959-1	
IC016	8-759-208-92	IC CX-892	
IC017	8-759-208-94	IC CX-894	
IC018	8-752-000-80	IC CX20008	
IC091	=>8-759-600-08	IC CX-870A	
IC092	8-759-608-82	IC CX-882	
IC500	8-759-240-66	IC TC4066BP	
		COIL	
L001	1-408-620-11	MICRO INDUCTOR 270UH	
L002	1-408-620-11	MICRO INDUCTOR 270UH	
L003	1-408-408-00	MICRO INDUCTOR 8.2UH	
L004	1-408-408-00	MICRO INDUCTOR 8.2UH	
L005	1-408-409-00	MICRO INDUCTOR 10UH	
L006	1-408-427-00	MICRO INDUCTOR 330UH	
L007	1-408-418-00	MICRO INDUCTOR 56UH	
L008	1-408-417-00	MICRO INDUCTOR 47UH	
L009	1-408-414-00	MICRO INDUCTOR 27UH	
L010	1-408-397-00	MICRO INDUCTOR 1UH	

NOTE:

The components identified by shading and mark ⚠ are critical for safety. Replace only with part number specified.

Les composants identifiés par une trame et une marque ⚠ sont critiques pour la sécurité. Ne les remplacer que par une pièce portant le numéro spécifié.

When indicating parts by reference number, please include the board name.

- =>: Due to standardization, interchangeable replacements may be substituted for parts specified in the diagrams.
- Items marked " ♦ " are not stocked since they are seldom required for routine service. Some delay should be anticipated when ordering these items.
- All variable and adjustable resistors have characteristic curve B, unless otherwise noted.

CAPACITORS
- MF : μF, PF : μμF

RESISTORS
- All resistors are in ohms
- F : nonflammable

COILS
- MMH : mH, UH : μH

Ref.No	Part No	Description	Remark
L011	1-408-397-00	MICRO INDUCTOR 1UH	
L012	1-408-423-00	MICRO INDUCTOR 150UH	
L013	1-408-419-00	MICRO INDUCTOR 68UH	
L014	1-408-418-00	MICRO INDUCTOR 56UH	
L015	1-408-414-00	MICRO INDUCTOR 27UH	
L016	1-408-414-00	MICRO INDUCTOR 27UH	
L017	1-408-402-00	MICRO INDUCTOR 2.7UH	
L019	1-408-401-00	MICRO INDUCTOR 2.2UH	
L021	1-408-422-00	MICRO INDUCTOR 120UH	
L022	1-408-427-00	MICRO INDUCTOR 330UH	
L023	1-408-423-00	MICRO INDUCTOR 150UH	
L024	1-407-502-31	MICRO INDUCTOR 6.8MMH	
L026	1-408-425-00	MICRO INDUCTOR 220UH	
L027	1-408-417-00	MICRO INDUCTOR 47UH	
L029	1-408-421-00	MICRO INDUCTOR 100UH	
L030	1-408-425-00	MICRO INDUCTOR 220UH	
L031	1-408-409-00	MICRO INDUCTOR 10UH	
L033	1-421-381-00	COIL, FERRITE CHOKE	
L034	1-408-414-00	MICRO INDUCTOR 27UH	
L036	1-408-401-00	MICRO INDUCTOR 2.2UH	
L037	1-408-402-00	MICRO INDUCTOR 2.7UH	
L038	1-407-188-XX	MICRO INDUCTOR 6.8UH	
L301	1-408-411-00	MICRO INDUCTOR 15UH	
L500	1-408-429-00	MICRO INDUCTOR 470UH	
L502	1-459-351-00	COIL (WITH CORE)	
		VARIABLE COIL	
LV001	1-408-512-00	COIL (VARIABLE)	
LV500	1-408-524-00	INDUCTOR, ADJ 1.34MMH	
LV501	1-408-523-00	COIL, VARIABLE 22UH	
		TRANSISTOR	
Q001	8-729-178-54	TRANSISTOR 2SC2785	
Q002	8-729-178-54	TRANSISTOR 2SC2785	
Q003	8-729-178-54	TRANSISTOR 2SC2785	
Q004	8-729-178-54	TRANSISTOR 2SC2785	
Q005	8-729-178-54	TRANSISTOR 2SC2785	
Q006	8-729-178-54	TRANSISTOR 2SC2785	
Q007	8-729-178-54	TRANSISTOR 2SC2785	
Q008	8-729-178-54	TRANSISTOR 2SC2785	
Q009	8-729-178-54	TRANSISTOR 2SC2785	
Q010	8-729-178-54	TRANSISTOR 2SC2785	
Q011	8-729-113-32	TRANSISTOR 2SB733	
Q012	8-729-178-54	TRANSISTOR 2SC2785	
Q013	8-729-117-54	TRANSISTOR 2SA1175	
Q014	8-729-117-54	TRANSISTOR 2SA1175	
Q015	8-729-178-54	TRANSISTOR 2SC2785	
Q016	8-729-178-54	TRANSISTOR 2SC2785	
Q017	8-729-178-54	TRANSISTOR 2SC2785	
Q018	8-729-178-54	TRANSISTOR 2SC2785	
Q019	8-729-178-54	TRANSISTOR 2SC2785	
Q020	8-729-178-54	TRANSISTOR 2SC2785	
Q021	8-729-178-54	TRANSISTOR 2SC2785	

Ref.No	Part No	Description	Remark
Q022	8-729-178-54	TRANSISTOR 2SC2785	
Q023	8-729-178-54	TRANSISTOR 2SC2785	
Q024	8-729-178-54	TRANSISTOR 2SC2785	
Q025	8-729-178-54	TRANSISTOR 2SC2785	
Q026	8-729-178-54	TRANSISTOR 2SC2785	
Q027	8-729-117-54	TRANSISTOR 2SA1175	
Q500	8-729-178-54	TRANSISTOR 2SC2785	
Q501	8-729-178-54	TRANSISTOR 2SC2785	
Q502	8-729-908-62	TRANSISTOR 2SD786	
Q503	=>8-729-612-77	TRANSISTOR 2SA1027R	
Q504	8-729-178-54	TRANSISTOR 2SC2785	
Q505	8-729-178-54	TRANSISTOR 2SC2785	
Q506	8-729-178-54	TRANSISTOR 2SC2785	
Q507	8-729-178-54	TRANSISTOR 2SC2785	
Q509	8-729-178-54	TRANSISTOR 2SC2785	
Q510	8-729-967-32	TRANSISTOR 2SC2673	
Q512	8-729-178-54	TRANSISTOR 2SC2785	
Q513	8-729-178-54	TRANSISTOR 2SC2785	
Q514	=>8-769-200-30	TRANSISTOR 2SK107-3	
Q515	8-729-334-58	TRANSISTOR 2SC1345	
Q516	8-729-178-54	TRANSISTOR 2SC2785	
Q517	8-729-178-54	TRANSISTOR 2SC2785	
Q518	8-729-178-54	TRANSISTOR 2SC2785	
Q519	8-729-178-54	TRANSISTOR 2SC2785	
Q520	8-729-178-54	TRANSISTOR 2SC2785	
Q521	=>8-769-200-30	TRANSISTOR 2SK107-3	
Q522	8-729-178-54	TRANSISTOR 2SC2785	
Q523	8-729-178-54	TRANSISTOR 2SC2785	
Q524	8-729-178-54	TRANSISTOR 2SC2785	
Q525	8-729-178-54	TRANSISTOR 2SC2785	
Q526	8-729-178-54	TRANSISTOR 2SC2785	
Q529	8-729-178-54	TRANSISTOR 2SC2785	
Q530	8-729-178-54	TRANSISTOR 2SC2785	
Q531	8-729-178-54	TRANSISTOR 2SC2785	
Q532	8-729-178-54	TRANSISTOR 2SC2785	
Q533	8-729-178-54	TRANSISTOR 2SC2785	
Q538	8-729-178-54	TRANSISTOR 2SC2785	
Q539	8-729-178-54	TRANSISTOR 2SC2785	
Q540	8-729-178-54	TRANSISTOR 2SC2785	
Q541	8-729-178-54	TRANSISTOR 2SC2785	
Q542	8-729-988-12	TRANSISTOR 2SA881	
Q543	8-729-178-54	TRANSISTOR 2SC2785	
Q544	8-729-967-32	TRANSISTOR 2SC2673	
Q545	8-729-178-54	TRANSISTOR 2SC2785	
Q546	8-729-178-54	TRANSISTOR 2SC2785	
Q547	8-729-178-54	TRANSISTOR 2SC2785	
		RESISTOR	
R001	1-246-843-00	CARBON 910	1/8W
R002	1-246-848-00	CARBON 2.4K	1/8W
R003	1-246-787-00	CARBON 2.2K	1/8W
R004	1-246-843-00	CARBON 910	1/8W
R006	1-246-780-00	CARBON 560	1/8W

NOTE:

The components identified by shading and mark ⚠ are critical for safety. Replace only with part number specified.

Les composants identifiés par une trame et une marque ⚠ sont critiques pour la sécurité. Ne les remplacer que par une pièce portant le numéro spécifié.

When indicating parts by reference number, please include the board name.

- =>: Due to standardization, interchangeable replacements may be substituted for parts specified in the diagrams.
- Items marked " ♦ " are not stocked since they are seldom required for routine service. Some delay should be anticipated when ordering these items.
- All variable and adjustable resistors have characteristic curve B, unless otherwise noted.

CAPACITORS
- MF : μF, PF : μμF

RESISTORS
- All resistors are in ohms
- F : nonflammable

COILS
- MMH : mH, UH : μH

VA-3 BOARD

Ref.No	Part No	Description			Remark
R007	1-246-807-00	CARBON	100K	1/8W	
R008	1-246-801-00	CARBON	33K	1/8W	
R009	1-246-843-00	CARBON	910	1/8W	
R010	1-246-851-00	CARBON	4.3K	1/8W	
R011	1-246-857-00	CARBON	13K	1/8W	
R012	1-246-808-00	CARBON	120K	1/8W	
R013	1-246-799-00	CARBON	22K	1/8W	
R014	1-246-803-00	CARBON	47K	1/8W	
R015	1-246-795-00	CARBON	10K	1/8W	
R017	1-246-783-00	CARBON	1K	1/8W	
R018	1-246-792-00	CARBON	5.6K	1/8W	
R019	1-246-803-00	CARBON	47K	1/8W	
R020	1-246-809-00	CARBON	150K	1/8W	
R021	1-246-801-00	CARBON	33K	1/8W	
R022	1-246-802-00	CARBON	39K	1/8W	
R023	1-246-786-00	CARBON	1.8K	1/8W	
R024	1-246-802-00	CARBON	39K	1/8W	
R025	1-246-783-00	CARBON	1K	1/8W	
R026	1-246-851-00	CARBON	4.3K	1/8W	
R027	1-246-777-00	CARBON	330	1/8W	
R028	1-246-834-00	CARBON	160	1/8W	
R029	1-246-770-00	CARBON	82	1/8W	
R030	1-246-770-00	CARBON	82	1/8W	
R031	1-246-840-00	CARBON	510	1/8W	
R032	1-246-791-00	CARBON	4.7K	1/8W	
R033	1-246-834-00	CARBON	160	1/8W	
R034	1-246-791-00	CARBON	4.7K	1/8W	
R035	1-246-778-00	CARBON	390	1/8W	
R036	1-246-791-00	CARBON	4.7K	1/8W	
R037	1-246-783-00	CARBON	1K	1/8W	
R038	1-246-803-00	CARBON	47K	1/8W	
R039	1-246-861-00	CARBON	30K	1/8W	
R040	1-246-783-00	CARBON	1K	1/8W	
R041	1-246-844-00	CARBON	1.1K	1/8W	
R042	1-246-844-00	CARBON	1.1K	1/8W	
R043	1-246-792-00	CARBON	5.6K	1/8W	
R044	1-246-783-00	CARBON	1K	1/8W	
R045	1-246-801-00	CARBON	33K	1/8W	
R046	1-246-787-00	CARBON	2.2K	1/8W	
R047	1-246-802-00	CARBON	39K	1/8W	
R048	1-246-799-00	CARBON	22K	1/8W	
R049	1-246-796-00	CARBON	12K	1/8W	
R050	1-246-791-00	CARBON	4.7K	1/8W	
R051	1-246-779-00	CARBON	470	1/8W	
R052	1-246-787-00	CARBON	2.2K	1/8W	
R053	1-246-783-00	CARBON	1K	1/8W	
R054	1-246-795-00	CARBON	10K	1/8W	
R056	1-246-795-00	CARBON	10K	1/8W	
R058	1-246-781-00	CARBON	680	1/8W	
R059	1-246-791-00	CARBON	4.7K	1/8W	
R060	1-246-852-00	CARBON	5.1K	1/8W	
R061	1-246-794-00	CARBON	8.2K	1/8W	
R062	1-246-808-00	CARBON	120K	1/8W	
R065	1-246-459-00	CARBON	270 5%	1/4W	
R066	1-246-785-00	CARBON	1.5K	1/8W	
R067	1-246-787-00	CARBON	2.2K	1/8W	
R068	1-246-769-00	CARBON	68	1/8W	
R069	1-246-461-00	CARBON	330 5%	1/4W	
R070	1-246-769-00	CARBON	68	1/8W	
R071	1-246-782-00	CARBON	820	1/8W	
R072	1-246-796-00	CARBON	12K	1/8W	
R073	1-246-843-00	CARBON	910	1/8W	
R074	1-246-840-00	CARBON	510	1/8W	
R075	1-246-844-00	CARBON	1.1K	1/8W	
R076	1-246-835-00	CARBON	200	1/8W	
R077	1-246-804-00	CARBON	56K	1/8W	
R078	1-246-805-00	CARBON	68K	1/8W	
R079	1-246-791-00	CARBON	4.7K	1/8W	
R080	1-246-799-00	CARBON	22K	1/8W	
R081	1-246-809-00	CARBON	150K	1/8W	
R082	1-246-807-00	CARBON	100K	1/8W	
R083	1-246-787-00	CARBON	2.2K	1/8W	
R084	1-246-783-00	CARBON	1K	1/8W	
R085	1-247-048-00	CARBON	390K	1/8W	
R086	1-247-049-00	CARBON	470K	1/8W	
R087	1-246-796-00	CARBON	12K	1/8W	
R088	1-246-847-00	CARBON	2K	1/8W	
R089	1-246-798-00	CARBON	18K	1/8W	
R090	1-246-863-00	CARBON	43K	1/8W	
R091	1-246-782-00	CARBON	820	1/8W	
R092	1-246-797-00	CARBON	15K	1/8W	
R093	1-246-795-00	CARBON	10K	1/8W	
R094	1-246-844-00	CARBON	1.1K	1/8W	
R095	1-246-783-00	CARBON	1K	1/8W	
R097	1-246-834-00	CARBON	160	1/8W	
R099	1-246-771-00	CARBON	100	1/8W	
R100	1-246-777-00	CARBON	330	1/8W	
R103	1-246-789-00	CARBON	3.3K	1/8W	
R104	1-246-791-00	CARBON	4.7K	1/8W	
R105	1-246-799-00	CARBON	22K	1/8W	
R106	1-246-791-00	CARBON	4.7K	1/8W	
R107	1-246-795-00	CARBON	10K	1/8W	
R108	1-246-794-00	CARBON	8.2K	1/8W	
R109	1-246-799-00	CARBON	22K	1/8W	
R110	1-246-799-00	CARBON	22K	1/8W	
R111	1-246-783-00	CARBON	1K	1/8W	
R112	1-246-783-00	CARBON	1K	1/8W	
R113	1-246-785-00	CARBON	1.5K	1/8W	
R114	1-246-810-00	CARBON	180K	1/8W	
R115	1-246-803-00	CARBON	47K	1/8W	
R116	1-246-803-00	CARBON	47K	1/8W	
R117	1-246-863-00	CARBON	43K	1/8W	
R118	1-246-863-00	CARBON	43K	1/8W	
R119	1-246-795-00	CARBON	10K	1/8W	
R120	1-246-792-00	CARBON	5.6K	1/8W	
R121	1-246-864-00	CARBON	51K	1/8W	

NOTE:

The components identified by shading and mark ⚠ are critical for safety. Replace only with part number specified.

Les composants identifiés par une trame et une marque ⚠ sont critiques pour la sécurité. Ne les remplacer que par une pièce portant le numéro spécifié.

When indicating parts by reference number, please include the board name.

- =>: Due to standardization, interchangeable replacements may be substituted for parts specified in the diagrams.
- Items marked " ♦ " are not stocked since they are seldom required for routine service. Some delay should be anticipated when ordering these items.
- All variable and adjustable resistors have characteristic curve B, unless otherwise noted.

CAPACITORS
- MF : μF, PF : μμF

RESISTORS
- All resistors are in ohms
- F : nonflammable

COILS
- MMH : mH, UH : μH

Ref.No	Part No	Description			Remark
R122	1-246-801-00	CARBON	33K	1/8W	
R123	1-246-804-00	CARBON	56K	1/8W	
R124	1-246-801-00	CARBON	33K	1/8W	
R125	1-246-801-00	CARBON	33K	1/8W	
R126	1-246-857-00	CARBON	13K	1/8W	
R127	1-246-802-00	CARBON	39K	1/8W	
R128	1-246-807-00	CARBON	100K	1/8W	
R129	1-246-842-00	CARBON	750	1/8W	
R130	1-246-789-00	CARBON	3.3K	1/8W	
R131	1-246-855-00	CARBON	9.1K	1/8W	
R132	1-246-785-00	CARBON	1.5K	1/8W	
R133	1-246-854-00	CARBON	7.5K	1/8W	
R134	1-246-847-00	CARBON	2K	1/8W	
R135	1-246-830-00	CARBON	75	1/8W	
R136	1-246-830-00	CARBON	75	1/8W	
R137	1-246-860-00	CARBON	24K	1/8W	
R138	1-246-841-00	CARBON	620	1/8W	
R139	1-246-783-00	CARBON	1K	1/8W	
R140	1-246-802-00	CARBON	39K	1/8W	
R141	1-246-794-00	CARBON	8.2K	1/8W	
R142	1-246-836-00	CARBON	240	1/8W	
R143	1-246-857-00	CARBON	13K	1/8W	
R144	1-246-865-00	CARBON	62K	1/8W	
R145	1-246-802-00	CARBON	39K	1/8W	
R146	1-246-803-00	CARBON	47K	1/8W	
R148	1-246-850-00	CARBON	3.6K	1/8W	
R149	1-246-850-00	CARBON	3.6K	1/8W	
R206	1-246-775-00	CARBON	220	1/8W	
R207	1-246-801-00	CARBON	33K	1/8W	
R208	1-247-052-00	CARBON	820K	1/8W	
R209	1-247-052-00	CARBON	820K	1/8W	
R211	1-246-789-00	CARBON	3.3K	1/8W	
R212	1-246-787-00	CARBON	2.2K	1/8W	
R213	1-246-783-00	CARBON	1K	1/8W	
R214	1-246-793-00	CARBON	6.8K	1/8W	
R215	1-246-785-00	CARBON	1.5K	1/8W	
R216	1-246-791-00	CARBON	4.7K	1/8W	
R217	1-246-783-00	CARBON	1K	1/8W	
R218	1-246-784-00	CARBON	1.2K	1/8W	
R219	1-246-780-00	CARBON	560	1/8W	
R220	1-246-780-00	CARBON	560	1/8W	
R221	1-246-840-00	CARBON	510	1/8W	
R223	1-246-795-00	CARBON	10K	1/8W	
R224	1-246-854-00	CARBON	7.5K	1/8W	
R225	1-246-851-00	CARBON	4.3K	1/8W	
R226	1-246-871-00	CARBON	200K	1/8W	
R227	1-246-869-00	CARBON	130K	1/8W	
R228	1-246-794-00	CARBON	8.2K	1/8W	
R229	1-246-870-00	CARBON	160K	1/8W	
R230	1-246-771-00	CARBON	100	1/8W	
R231	1-246-779-00	CARBON	470	1/8W	
R232	1-246-783-00	CARBON	1K	1/8W	
R233	1-246-783-00	CARBON	1K	1/8W	

Ref.No	Part No	Description			Remark
R234	1-246-803-00	CARBON	47K	1/8W	
R235	1-246-803-00	CARBON	47K	1/8W	
R236	1-246-803-00	CARBON	47K	1/8W	
R237	1-246-801-00	CARBON	33K	1/8W	
R238	1-246-801-00	CARBON	33K	1/8W	
R239	1-246-785-00	CARBON	1.5K	1/8W	
R240	1-246-771-00	CARBON	100	1/8W	
R241	1-246-789-00	CARBON	3.3K	1/8W	
R242	1-246-856-00	CARBON	11K	1/8W	
R243	1-246-802-00	CARBON	39K	1/8W	
R244	1-246-783-00	CARBON	1K	1/8W	
R245	1-246-791-00	CARBON	4.7K	1/8W	
R246	1-246-791-00	CARBON	4.7K	1/8W	
R247	1-246-797-00	CARBON	15K	1/8W	
R248	1-246-858-00	CARBON	16K	1/8W	
R249	1-246-805-00	CARBON	68K	1/8W	
R251	1-246-802-00	CARBON	39K	1/8W	
R252	1-246-807-00	CARBON	100K	1/8W	
R253	1-246-771-00	CARBON	100	1/8W	
R254	1-246-837-00	CARBON	300	1/8W	
R255	1-246-837-00	CARBON	300	1/8W	
R256	1-246-839-00	CARBON	430	1/8W	
R257	1-246-803-00	CARBON	47K	1/8W	
R258	1-246-799-00	CARBON	22K	1/8W	
R259	1-246-799-00	CARBON	22K	1/8W	
R260	1-247-048-00	CARBON	390K	1/8W	
R261	1-246-787-00	CARBON	2.2K	1/8W	
R262	1-246-801-00	CARBON	33K	1/8W	
R263	1-246-801-00	CARBON	33K	1/8W	
R264	1-246-852-00	CARBON	5.1K	1/8W	
R266	1-246-799-00	CARBON	22K	1/8W	
R301	1-246-777-00	CARBON	330	1/8W	
R302	1-246-791-00	CARBON	4.7K	1/8W	
R303	1-246-791-00	CARBON	4.7K	1/8W	
R304	1-246-805-00	CARBON	68K	1/8W	
R305	1-246-794-00	CARBON	8.2K	1/8W	
R306	1-246-799-00	CARBON	22K	1/8W	
R307	1-246-859-00	CARBON	20K	1/8W	
R308	1-246-857-00	CARBON	13K	1/8W	
R310	1-246-787-00	CARBON	2.2K	1/8W	
R311	1-246-844-00	CARBON	1.1K	1/8W	
R312	1-246-783-00	CARBON	1K	1/8W	
R313	1-246-859-00	CARBON	20K	1/8W	
R314	1-246-769-00	CARBON	68	1/8W	
R315	1-246-848-00	CARBON	2.4K	1/8W	
R317	1-246-847-00	CARBON	2K	1/8W	
R318	1-246-771-00	CARBON	100	1/8W	
R320	1-246-851-00	CARBON	4.3K	1/8W	
R321	1-246-801-00	CARBON	33K	1/8W	
R322	1-246-801-00	CARBON	33K	1/8W	
R323	1-246-795-00	CARBON	10K	1/8W	
R324	1-246-801-00	CARBON	33K	1/8W	
R325	1-246-795-00	CARBON	10K	1/8W	

NOTE:

The components identified by shading and mark ⚠ are critical for safety. Replace only with part number specified.

Les composants identifiés par une trame et une marque ⚠ sont critiques pour la sécurité. Ne les remplacer que par une pièce portant le numéro spécifié.

When indicating parts by reference number, please include the board name.

- =>: Due to standardization, interchangeable replacements may be substituted for parts specified in the diagrams.
- Items marked " ♦ " are not stocked since they are seldom required for routine service. Some delay should be anticipated when ordering these items.
- All variable and adjustable resistors have characteristic curve B, unless otherwise noted.

CAPACITORS
- MF : μF, PF : μμF

RESISTORS
- All resistors are in ohms
- F : nonflammable

COILS
- MMH : mH, UH : μH

VA-3 BOARD

Ref.No	Part No	Description			Remark
R326	1-246-789-00	CARBON	3.3K	1/8W	
R500	1-246-759-00	CARBON	10	1/8W	
R501	1-246-803-00	CARBON	47K	1/8W	
R502	1-246-801-00	CARBON	33K	1/8W	
R503	1-246-803-00	CARBON	47K	1/8W	
R504	1-246-801-00	CARBON	33K	1/8W	
R506	1-246-543-00	CARBON	820K 5%	1/4W	
R507	1-246-513-00	CARBON	47K 5%	1/4W	
R508	1-246-800-00	CARBON	27K	1/8W	
R509	1-246-791-00	CARBON	4.7K	1/8W	
R510	1-246-869-00	CARBON	130K	1/8W	
R511	1-246-521-00	CARBON	100K 5%	1/4W	
R512	1-246-768-00	CARBON	56	1/8W	
R513	1-246-797-00	CARBON	15K	1/8W	
R514	1-246-795-00	CARBON	10K	1/8W	
R515	1-246-852-00	CARBON	5.1K	1/8W	
R516	1-246-846-00	CARBON	1.6K	1/8W	
R517	1-246-796-00	CARBON	12K	1/8W	
R518	1-246-799-00	CARBON	22K	1/8W	
R519	1-246-801-00	CARBON	33K	1/8W	
R520	1-246-801-00	CARBON	33K	1/8W	
R521	1-246-796-00	CARBON	12K	1/8W	
R522	1-246-798-00	CARBON	18K	1/8W	
R523	1-246-793-00	CARBON	6.8K	1/8W	
R525	1-246-801-00	CARBON	33K	1/8W	
R526	1-246-771-00	CARBON	100	1/8W	
R527	1-246-795-00	CARBON	10K	1/8W	
R528	1-246-797-00	CARBON	15K	1/8W	
R531 ⚠	1-246-980-00	CARBON	3.3 5%	1/8W F	
R532	1-246-771-00	CARBON	100	1/8W	
R533	1-246-795-00	CARBON	10K	1/8W	
R534	1-246-797-00	CARBON	15K	1/8W	
R535	1-246-804-00	CARBON	56K	1/8W	
R536	1-246-804-00	CARBON	56K	1/8W	
R537	1-246-795-00	CARBON	10K	1/8W	
R538	1-246-807-00	CARBON	100K	1/8W	
R539	1-246-866-00	CARBON	75K	1/8W	
R540	1-246-866-00	CARBON	75K	1/8W	
R541	1-246-807-00	CARBON	100K	1/8W	
R542	1-246-807-00	CARBON	100K	1/8W	
R543	1-246-807-00	CARBON	100K	1/8W	
R544	1-246-783-00	CARBON	1K	1/8W	
R545	1-246-783-00	CARBON	1K	1/8W	
R546	1-246-803-00	CARBON	47K	1/8W	
R547	1-246-803-00	CARBON	47K	1/8W	
R548	1-246-799-00	CARBON	22K	1/8W	
R549	1-246-804-00	CARBON	56K	1/8W	
R550	1-246-795-00	CARBON	10K	1/8W	
R551	1-246-811-00	CARBON	220K	1/8W	
R552	1-246-807-00	CARBON	100K	1/8W	
R553	1-246-834-00	CARBON	160	1/8W	
R554	1-246-795-00	CARBON	10K	1/8W	
R555	1-246-811-00	CARBON	220K	1/8W	

Ref.No	Part No	Description			Remark
R556	1-246-795-00	CARBON	10K	1/8W	
R557	1-246-783-00	CARBON	1K	1/8W	
R558	1-246-803-00	CARBON	47K	1/8W	
R559	1-246-801-00	CARBON	33K	1/8W	
R560	1-246-801-00	CARBON	33K	1/8W	
R561	1-246-791-00	CARBON	4.7K	1/8W	
R562	1-247-047-00	CARBON	330K	1/8W	
R563	1-246-799-00	CARBON	22K	1/8W	
R564	1-246-792-00	CARBON	5.6K	1/8W	
R565	1-202-469-00	COMPOSITION	3.9M 5%	1/4W	
R566	1-246-795-00	CARBON	10K	1/8W	
R567	1-246-771-00	CARBON	100	1/8W	
R568	1-246-799-00	CARBON	22K	1/8W	
R569	1-246-799-00	CARBON	22K	1/8W	
R570	1-246-792-00	CARBON	5.6K	1/8W	
R571	1-246-795-00	CARBON	10K	1/8W	
R572	1-246-795-00	CARBON	10K	1/8W	
R573	1-246-795-00	CARBON	10K	1/8W	
R574	1-246-867-00	CARBON	91K	1/8W	
R575	1-246-793-00	CARBON	6.8K	1/8W	
R577	1-246-793-00	CARBON	6.8K	1/8W	
R578	1-247-049-00	CARBON	470K	1/8W	
R579	1-246-787-00	CARBON	2.2K	1/8W	
R581	1-246-789-00	CARBON	3.3K	1/8W	
R584	1-246-788-00	CARBON	2.7K	1/8W	
R585	1-246-852-00	CARBON	5.1K	1/8W	
R586	1-246-843-00	CARBON	910	1/8W	
R592	1-246-795-00	CARBON	10K	1/8W	
R593	1-246-795-00	CARBON	10K	1/8W	
R594	1-246-796-00	CARBON	12K	1/8W	
R595	1-246-793-00	CARBON	6.8K	1/8W	
R596	1-246-805-00	CARBON	68K	1/8W	
R597	1-246-797-00	CARBON	15K	1/8W	
R598	1-246-796-00	CARBON	12K	1/8W	
R599	1-246-861-00	CARBON	30K	1/8W	
R600	1-246-860-00	CARBON	24K	1/8W	
R601	1-246-792-00	CARBON	5.6K	1/8W	
R602	1-246-791-00	CARBON	4.7K	1/8W	
R603	1-246-780-00	CARBON	560	1/8W	
R604	1-246-786-00	CARBON	1.8K	1/8W	
R605	1-246-799-00	CARBON	22K	1/8W	
R606	1-246-801-00	CARBON	33K	1/8W	
R607	1-246-771-00	CARBON	100	1/8W	
R608	1-246-783-00	CARBON	1K	1/8W	
R610	1-246-793-00	CARBON	6.8K	1/8W	
R611	1-247-047-00	CARBON	330K	1/8W	
R612	1-246-795-00	CARBON	10K	1/8W	
R613	1-246-791-00	CARBON	4.7K	1/8W	
R614	1-246-801-00	CARBON	33K	1/8W	
R615	1-246-793-00	CARBON	6.8K	1/8W	
R616	1-246-797-00	CARBON	15K	1/8W	
R617	1-246-787-00	CARBON	2.2K	1/8W	
R618	1-246-811-00	CARBON	220K	1/8W	

NOTE:

The components identified by shading and mark ⚠ are critical for safety. Replace only with part number specified.

Les composants identifiés par une trame et une marque ⚠ sont critiques pour la sécurité. Ne les remplacer que par une pièce portant le numéro spécifié.

When indicating parts by reference number, please include the board name.

- =>: Due to standardization, interchangeable replacements may be substituted for parts specified in the diagrams.
- Items marked " ♦ " are not stocked since they are seldom required for routine service. Some delay should be anticipated when ordering these items.

- All variable and adjustable resistors have characteristic curve B, unless otherwise noted.

CAPACITORS
- MF : μF, PF : μμF

RESISTORS
- All resistors are in ohms
- F : nonflammable

COILS
- MMH : mH, UH : μH

Ref.No	Part No	Description			Remark
R619	1-246-807-00	CARBON	100K	1/8W	
R620	1-246-811-00	CARBON	220K	1/8W	
R621	1-246-807-00	CARBON	100K	1/8W	
R622	1-246-807-00	CARBON	100K	1/8W	
R623	1-246-811-00	CARBON	220K	1/8W	
R624	1-246-807-00	CARBON	100K	1/8W	
R625	1-246-787-00	CARBON	2.2K	1/8W	
R626	1-246-797-00	CARBON	15K	1/8W	
R627	1-246-783-00	CARBON	1K	1/8W	
R628	1-246-783-00	CARBON	1K	1/8W	
R629	1-246-783-00	CARBON	1K	1/8W	
R630	1-246-791-00	CARBON	4.7K	1/8W	
R631	1-246-784-00	CARBON	1.2K	1/8W	
R632	1-246-796-00	CARBON	12K	1/8W	
R633	1-246-791-00	CARBON	4.7K	1/8W	
R634	1-246-801-00	CARBON	33K	1/8W	
R635	1-246-799-00	CARBON	22K	1/8W	
R636	1-246-807-00	CARBON	100K	1/8W	
R638	1-246-780-00	CARBON	560	1/8W	
R639	1-246-829-00	CARBON	62	1/8W	
R640	1-246-783-00	CARBON	1K	1/8W	
R641	1-246-792-00	CARBON	5.6K	1/8W	
R642	1-246-797-00	CARBON	15K	1/8W	
R643	1-246-791-00	CARBON	4.7K	1/8W	
R647	1-246-801-00	CARBON	33K	1/8W	
R648	1-246-801-00	CARBON	33K	1/8W	
R649	1-247-053-00	CARBON	1M	1/8W	
R650	1-246-783-00	CARBON	1K	1/8W	
R651	1-246-787-00	CARBON	2.2K	1/8W	
R652	1-246-787-00	CARBON	2.2K	1/8W	
R653	1-246-801-00	CARBON	33K	1/8W	
R654	1-246-807-00	CARBON	100K	1/8W	
R655	1-246-783-00	CARBON	1K	1/8W	

VARIABLE RESISTOR

RV001	1-224-249-XX	RES, ADJ, SOLID 1K			
RV003	1-224-250-XX	RES, ADJ, SOLID 2.2K			
RV004	1-224-251-XX	RES, ADJ, SOLID 4.7K			
RV005	1-224-250-XX	RES, ADJ, SOLID 2.2K			
RV006	1-224-249-XX	RES, ADJ, SOLID 1K			
RV007	1-224-249-XX	RES, ADJ, SOLID 1K			
RV008	1-224-250-XX	RES, ADJ, SOLID 2.2K			
RV009	1-224-251-XX	RES, ADJ, SOLID 4.7K			
RV010	1-224-251-XX	RES, ADJ, SOLID 4.7K			
RV011	1-224-251-XX	RES, ADJ, SOLID 4.7K			
RV012	1-224-251-XX	RES, ADJ, SOLID 4.7K			
RV013	1-224-252-XX	RES, ADJ, SOLID 10K			
RV014	1-224-252-XX	RES, ADJ, SOLID 10K			
RV015	1-224-250-XX	RES, ADJ, SOLID 2.2K			
RV016	1-224-251-XX	RES, ADJ, SOLID 4.7K			
RV017	1-224-248-XX	RES, ADJ, SOLID 470			
RV019	1-224-254-XX	RES, ADJ, SOLID 47K			
RV020	1-224-254-XX	RES, ADJ, SOLID 47K			
RV021	1-224-250-XX	RES, ADJ, SOLID 2.2K			
RV022	1-224-251-XX	RES, ADJ, SOLID 4.7K			
RV025	1-224-252-XX	RES, ADJ, SOLID 10K			
RV026	1-224-254-XX	RES, ADJ, SOLID 47K			
RV027	1-224-248-XX	RES, ADJ, SOLID 470			
RV028	1-224-248-XX	RES, ADJ, SOLID 470			
RV029	1-224-250-XX	RES, ADJ, SOLID 2.2K			
RV030	1-224-251-XX	RES, ADJ, SOLID 4.7K			
RV500	1-224-254-XX	RES, ADJ, SOLID 47K			
RV501	1-224-255-XX	RES, ADJ, SOLID 100K			
RV502	1-224-251-XX	RES, ADJ, SOLID 4.7K			

RELAY

RY501	1-515-418-00	RELAY			
RY502	1-515-416-00	RELAY			

SWITCH

SW001	1-552-821-00	SWITCH, SLIDE			

TRANSFORMER

T001	1-235-057-00	FILTER, BAND PASS			
T002	1-426-065-00	COIL, BPF-1			
T003	1-426-070-00	COIL (EQT)			
T004	1-409-352-00	COIL, TRAP			
T005	1-409-353-00	COIL, TRAP			
T006	1-231-412-00	FILTER BLOCK			
T007	1-426-089-00	COIL (EQT)			
T500	1-433-236-00	TRANSFORMER, OSCILLATOR			

CONNECTOR

VCN013	1-507-742-00	JACK, PIN 2P			

CRYSTAL

X001	1-527-396-00	CRYSTAL, OSC			

****

♦:1-606-272-00 MI-2 BOARD
****

CONNECTOR

CN501	1-507-285-00	JACK			

****

♦:A-6711-323-A VL-3 BOARD, COMPLETE
****

	1-246-795-00	CARBON	10K	1/8W	
	1-246-795-00	CARBON	10K	1/8W	

CAPACITOR

C001	1-123-306-00	ELECT	47MF	20%	10V

NOTE:

The components identified by shading and mark ⚠ are critical for safety. Replace only with part number specified.

Les composants identifiés par une trame et une marque ⚠ sont critiques pour la sécurité. Ne les remplacer que par une pièce portant le numéro spécifié.

When indicating parts by reference number, please include the board name.

- =>: Due to standardization, interchangeable replacements may be substituted for parts specified in the diagrams.
- Items marked " ♦ " are not stocked since they are seldom required for routine service. Some delay should be anticipated when ordering these items.
- All variable and adjustable resistors have characteristic curve B, unless otherwise noted.

CAPACITORS
- MF : μF, PF : μμF

RESISTORS
- All resistors are in ohms
- F : nonflammable

COILS
- MMH : mH, UH : μH

VL-3 BOARD

Ref.No	Part No	Description				Remark
C002	1-123-616-00	ELECT	4.7MF	20%	25V	
C003	1-123-617-00	ELECT	10MF	20%	16V	
C004	1-130-022-DD	FILM	0.0022MF	5%	50V	
C005	1-161-013-00	CERAMIC	0.01MF	10%	25V	
C006	1-123-617-00	ELECT	10MF	20%	16V	
C007	1-130-532-51	MYLAR	0.22MF	10%	50V	
C008	1-123-617-00	ELECT	10MF	20%	16V	
C009	1-123-617-00	ELECT	10MF	20%	16V	
C010	1-102-074-00	CERAMIC	0.001MF	10%	50V	
C011	1-131-404-00	ELECT(SOLID)	0.22MF	10%	25V	
C012	1-102-126-00	CERAMIC	0.0056MF	10%	50V	
C013	1-123-616-00	ELECT	4.7MF	20%	25V	
C014	1-161-013-00	CERAMIC	0.01MF	10%	25V	
C015	1-123-306-00	ELECT	47MF	20%	10V	
C016	1-123-645-00	ELECT	33MF	20%	10V	
C017	1-123-617-00	ELECT	10MF	20%	16V	
C018	1-123-617-00	ELECT	10MF	20%	16V	
C019	1-123-617-00	ELECT	10MF	20%	16V	
C020	1-123-617-00	ELECT	10MF	20%	16V	
C021	1-102-118-00	CERAMIC	0.0012MF	10%	50V	
C022	1-123-617-00	ELECT	10MF	20%	16V	
C023	1-123-617-00	ELECT	10MF	20%	16V	
C024	1-131-404-00	ELECT(SOLID)	0.22MF	10%	25V	
C025	1-130-029-00	FILM	0.0082MF	5%	50V	
C026	1-130-025-00	FILM	0.0039MF	5%	50V	
C027	1-123-622-00	ELECT	22MF	20%	16V	
C028	1-123-306-00	ELECT	47MF	20%	10V	
C029	1-161-013-00	CERAMIC	0.01MF	10%	25V	
C030	1-131-342-00	ELECT(SOLID)	0.15MF	10%	25V	
C031	1-161-013-00	CERAMIC	0.01MF	10%	25V	
C032	1-123-307-00	ELECT	100MF	20%	10V	
C033	1-130-028-00	FILM	0.0068MF	5%	50V	
C034	1-130-025-00	FILM	0.0039MF	5%	50V	
C035	1-130-481-00	MYLAR	0.0068MF	5%	50V	
C036	1-131-342-00	ELECT(SOLID)	0.15MF	10%	25V	
C037	1-123-306-00	ELECT	47MF	20%	10V	
C038	1-130-524-51	MYLAR	0.047MF	10%	50V	
C040	1-123-306-00	ELECT	47MF	20%	10V	
C041	1-123-613-00	ELECT	3.3MF	20%	50V	
C042	1-161-034-00	CERAMIC	0.022MF	20%	25V	
C043	1-102-121-00	CERAMIC	0.0022MF	10%	50V	
C044	1-123-617-00	ELECT	10MF	20%	16V	
C045	1-131-345-00	ELECT(SOLID)	0.47MF	10%	25V	
C046	1-131-345-00	ELECT(SOLID)	0.47MF	10%	25V	
C047	1-123-617-00	ELECT	10MF	20%	16V	
C048	1-130-524-51	MYLAR	0.047MF	10%	50V	
C049	1-131-407-00	ELECT(SOLID)	0.68MF	10%	25V	
C050	1-102-074-00	CERAMIC	0.001MF	10%	50V	
C051	1-123-617-00	ELECT	10MF	20%	16V	

CONNECTOR

CN001♣	1-560-472-00	PIN, CONNECTOR 12P
CN002♣	1-560-472-00	PIN, CONNECTOR 12P
CN003♣	1-560-470-00	PIN, CONNECTOR 8P
CN004♣	1-560-466-00	PIN, CONNECTOR 3P

COMPOSITION CIRCUIT BLOCK

CP002	1-231-810-00	COMPOSITION CIRCUIT BLOCK
CP003	1-231-628-00	COMPOSITION CIRCUIT BLOCK
CP004	1-231-628-00	COMPOSITION CIRCUIT BLOCK
CP005	1-231-796-21	COMPOSITION CIRCUIT BLOCK
CP006	1-231-628-00	COMPOSITION CIRCUIT BLOCK
CP007	1-231-628-00	COMPOSITION CIRCUIT BLOCK
CP008	1-232-131-00	COMPOSITION CIRCUIT BLOCK
CP009	1-232-133-00	COMPOSITION CIRCUIT BLOCK
CP010	1-231-628-00	COMPOSITION CIRCUIT BLOCK
CP011	1-232-173-00	COMPOSITION CIRCUIT BLOCK
CP012	1-232-174-00	COMPOSITION CIRCUIT BLOCK
CP013	1-232-175-00	COMPOSITION CIRCUIT BLOCK
CP014	1-231-773-00	COMPOSITION CIRCUIT BLOCK
CP015	1-231-886-00	COMPOSITION CIRCUIT BLOCK
CP016	1-231-628-00	COMPOSITION CIRCUIT BLOCK
CP017	1-232-176-00	COMPOSITION CIRCUIT BLOCK
CP018	1-232-177-00	COMPOSITION CIRCUIT BLOCK
CP019	1-232-178-00	COMPOSITION CIRCUIT BLOCK
CP020	1-232-175-00	COMPOSITION CIRCUIT BLOCK

DIODE

D003 =>8-719-911-19	DIODE 1SS119	
D004 =>8-719-911-19	DIODE 1SS119	
D005 =>8-719-911-19	DIODE 1SS119	
D006 =>8-719-911-19	DIODE 1SS119	
D007 =>8-719-911-19	DIODE 1SS119	
D009 =>8-719-911-19	DIODE 1SS119	
D010 =>8-719-911-19	DIODE 1SS119	
D013 =>8-719-911-19	DIODE 1SS119	
D014 =>8-719-911-19	DIODE 1SS119	
D015 =>8-719-911-19	DIODE 1SS119	

IC

IC001	8-759-132-40	IC UPC324C
IC002	8-759-132-40	IC UPC324C
IC003	8-759-132-40	IC UPC324C
IC004	8-759-240-30	IC TC4030BP
IC005	8-741-104-10	IC BX-1041
IC006	8-759-240-66	IC TC4066BP
IC007	8-759-240-13	IC TC4013BP
IC008	8-759-240-81	IC TC4081BP
IC009=>8-759-345-38		IC HD14538BP
IC010	8-759-240-11	IC TC4011BP
IC011	8-759-240-11	IC TC4011BP
IC012	8-759-240-81	IC TC4081BP
IC013	8-759-240-11	IC TC4011BP
IC014	8-759-240-69	IC TC4069UBP

NOTE:

The components identified by shading and mark ⚠ are critical for safety. Replace only with part number specified.

Les composants identifiés par une trame et une marque ⚠ sont critiques pour la sécurité. Ne les remplacer que par une pièce portant le numéro spécifié.

When indicating parts by reference number, please include the board name.

- =>: Due to standardization, interchangeable replacements may be substituted for parts specified in the diagrams.
- Items marked "♣" are not stocked since they are seldom required for routine service. Some delay should be anticipated when ordering these items.
- All variable and adjustable resistors have characteristic curve B, unless otherwise noted.

CAPACITORS
- MF : μF, PF : μμF

RESISTORS
- All resistors are in ohms
- F : nonflammable

COILS
- MMH : mH, UH : μH

Ref.No	Part No	Description	Remark
		TRANSISTOR	
Q001	8-729-993-72	TRANSISTOR 2SA937	
Q002	8-729-178-54	TRANSISTOR 2SC2785	
Q003	8-729-178-54	TRANSISTOR 2SC2785	
Q004	8-729-178-54	TRANSISTOR 2SC2785	
Q005	8-729-117-54	TRANSISTOR 2SA1175	
Q006	8-729-178-54	TRANSISTOR 2SC2785	
Q007	8-729-993-72	TRANSISTOR 2SA937	
Q008	8-729-178-54	TRANSISTOR 2SC2785	
Q009	8-729-178-54	TRANSISTOR 2SC2785	
Q010	8-729-117-54	TRANSISTOR 2SA1175	
Q012	8-729-178-54	TRANSISTOR 2SC2785	
Q013	8-729-178-54	TRANSISTOR 2SC2785	
Q014	8-729-117-54	TRANSISTOR 2SA1175	
Q015	8-729-117-54	TRANSISTOR 2SA1175	
Q016	8-729-178-54	TRANSISTOR 2SC2785	
Q017	8-729-178-54	TRANSISTOR 2SC2785	
Q018	8-729-902-11	TRANSISTOR 2SC2021	
Q019	8-729-178-54	TRANSISTOR 2SC2785	
Q020	8-729-178-54	TRANSISTOR 2SC2785	
Q021	8-729-178-54	TRANSISTOR 2SC2785	
Q022	8-729-117-54	TRANSISTOR 2SA1175	
Q023	8-729-117-54	TRANSISTOR 2SA1175	
Q024	8-729-178-54	TRANSISTOR 2SC2785	
Q025	8-729-178-54	TRANSISTOR 2SC2785	
Q026	8-729-117-54	TRANSISTOR 2SA1175	
Q027	8-729-117-54	TRANSISTOR 2SA1175	
Q028	8-729-117-54	TRANSISTOR 2SA1175	
Q029	8-729-117-54	TRANSISTOR 2SA1175	
Q030	=>8-729-902-11	TRANSISTOR 2SC2021	
Q031	8-729-117-54	TRANSISTOR 2SA1175	
Q032	8-729-902-11	TRANSISTOR 2SC2021	
Q033	8-729-117-54	TRANSISTOR 2SA1175	
Q034	8-729-117-54	TRANSISTOR 2SA1175	
Q035	8-729-117-54	TRANSISTOR 2SA1175	
Q036	8-729-117-54	TRANSISTOR 2SA1175	
Q037	8-729-178-54	TRANSISTOR 2SC2785	
		RESISTOR	
R001	1-246-803-00	CARBON 47K 1/8W	
R002	1-246-803-00	CARBON 47K 1/8W	
R003	1-214-154-00	METAL 8.2K 1% 1/4W	
R004	1-214-156-00	METAL 10K 1% 1/4W	
R005	1-246-791-00	CARBON 4.7K 1/8W	
R006	1-247-053-00	CARBON 1M 1/8W	
R011	1-246-791-00	CARBON 4.7K 1/8W	
R012	1-247-053-00	CARBON 1M 1/8W	
R013	1-246-792-00	CARBON 5.6K 1/8W	
R014	1-246-799-00	CARBON 22K 1/8W	
R015	1-246-803-00	CARBON 47K 1/8W	
R016	1-246-807-00	CARBON 100K 1/8W	
R017	1-246-852-00	CARBON 5.1K 1/8W	

Ref.No	Part No	Description	Remark
R020	1-246-846-00	CARBON 1.6K 1/8W	
R021	1-246-851-00	CARBON 4.3K 1/8W	
R022	1-246-807-00	CARBON 100K 1/8W	
R023	1-246-864-00	CARBON 51K 1/8W	
R024	1-246-807-00	CARBON 100K 1/8W	
R025	1-246-807-00	CARBON 100K 1/8W	
R026	1-246-795-00	CARBON 10K 1/4W	
R032	1-246-781-00	CARBON 680 1/8W	
R033	1-246-807-00	CARBON 100K 1/8W	
R037	1-246-807-00	CARBON 100K 1/8W	
R038	1-214-140-00	METAL 2.2K 1% 1/4W	
R039	1-214-156-00	METAL 10K 1% 1/4W	
R040	1-214-168-00	METAL 33K 1% 1/4W	
R041	1-246-803-00	CARBON 47K 1/8W	
R043	1-247-053-00	CARBON 1M 1/8W	
R044	1-247-053-00	CARBON 1M 1/8W	
R045	1-246-765-00	CARBON 33 1/8W	
R047	1-246-807-00	CARBON 100K 1/8W	
R048	1-246-844-00	CARBON 1.1K 1/8W	
R049	1-246-846-00	CARBON 1.6K 1/8W	
R050	1-246-846-00	CARBON 1.6K 1/8W	
R052	1-246-791-00	CARBON 4.7K 1/8W	
R053	1-246-801-00	CARBON 33K 1/8W	
R055	1-247-053-00	CARBON 1M 1/8W	
R058	1-246-792-00	CARBON 5.6K 1/8W	
R061	1-246-848-00	CARBON 2.4K 1/8W	
R062	1-246-803-00	CARBON 47K 1/8W	
R063	1-246-783-00	CARBON 1K 1/8W	
R064	1-246-783-00	CARBON 1K 1/8W	
R065	1-246-783-00	CARBON 1K 1/8W	
R066	1-246-804-00	CARBON 56K 1/8W	
R067	1-246-804-00	CARBON 56K 1/8W	
R068	1-246-807-00	CARBON 100K 1/8W	
R069	1-246-803-00	CARBON 47K 1/8W	
R070	1-246-850-00	CARBON 3.6K 1/8W	
R071	1-246-805-00	CARBON 68K 1/8W	
R072	1-246-804-00	CARBON 56K 1/8W	
R073	1-246-804-00	CARBON 56K 1/8W	
R074	1-246-803-00	CARBON 47K 1/8W	
R075	1-246-795-00	CARBON 10K 1/8W	
R076	1-246-795-00	CARBON 10K 1/8W	
R077	1-246-807-00	CARBON 100K 1/8W	
R078	1-246-807-00	CARBON 100K 1/8W	
R080	1-246-803-00	CARBON 47K 1/8W	
R084	1-246-791-00	CARBON 4.7K 1/8W	
R085	1-246-807-00	CARBON 100K 1/8W	
R086	1-214-780-00	METAL 130K 1% 1/4W	
R087	1-214-786-00	METAL 240K 1% 1/4W	
R088	1-246-775-00	CARBON 220 1/8W	
R089	1-246-805-00	CARBON 68K 1/8W	
R090	1-246-803-00	CARBON 47K 1/8W	
R091	1-246-803-00	CARBON 47K 1/8W	
R092	1-247-053-00	CARBON 1M 1/8W	

NOTE:

The components identified by shading and mark ⚠ are critical for safety. Replace only with part number specified.

Les composants identifiés par une trame et une marque ⚠ sont critiques pour la sécurité. Ne les remplacer que par une pièce portant le numéro spécifié.

When indicating parts by reference number, please include the board name.

- =>: Due to standardization, interchangeable replacements may be substituted for parts specified in the diagrams.
- Items marked " ♦ " are not stocked since they are seldom required for routine service. Some delay should be anticipated when ordering these items.
- All variable and adjustable resistors have characteristic curve B, unless otherwise noted.

CAPACITORS
- MF : μF, PF : μμF

RESISTORS
- All resistors are in ohms
- F : nonflammable

COILS
- MMH : mH, UH : μH

VL-3 BOARD | SS-10A BOARD

Ref.No	Part No	Description				Remark
R093	1-246-777-00	CARBON	330		1/8W	
R094	1-246-803-00	CARBON	47K		1/8W	
R095	1-246-803-00	CARBON	47K		1/8W	
R096	1-246-807-00	CARBON	100K		1/8W	
R097	1-246-807-00	CARBON	100K		1/8W	
R100	1-246-771-00	CARBON	100		1/8W	
R101	1-246-795-00	CARBON	10K		1/8W	
R102	1-246-783-00	CARBON	1K		1/8W	
R103	1-246-795-00	CARBON	10K		1/8W	
R104	1-246-795-00	CARBON	10K		1/8W	
R105	1-246-803-00	CARBON	47K		1/8W	
R106	1-214-174-00	METAL	56K	1%	1/4W	
R107	1-214-178-00	METAL	82K	1%	1/4W	
R108	1-214-150-00	METAL	5.6K	1%	1/4W	
R109	1-246-783-00	CARBON	1K		1/8W	
R110	1-246-807-00	CARBON	100K		1/8W	
R111	1-246-799-00	CARBON	22K		1/8W	
R112	1-246-807-00	CARBON	100K		1/8W	
R113	1-214-163-00	METAL	20K	1%	1/4W	
R114	1-214-167-00	METAL	30K	1%	1/4W	
R115	1-246-790-00	CARBON	3.9K		1/8W	
R116	1-246-807-00	CARBON	100K		1/8W	
R117	1-214-142-00	METAL	2.7K	1%	1/4W	
R118	1-214-132-00	METAL	1K	1%	1/4W	
R121	1-246-803-00	CARBON	47K		1/8W	
R122	1-246-803-00	CARBON	47K		1/8W	
R123	1-246-802-00	CARBON	39K		1/8W	
R124	1-246-795-00	CARBON	10K		1/8W	
R125	1-246-857-00	CARBON	13K		1/8W	
R126	1-246-801-00	CARBON	33K		1/8W	
R127	1-246-803-00	CARBON	47K		1/8W	
R128	1-246-783-00	CARBON	1K		1/8W	
R129	1-246-861-00	CARBON	30K		1/8W	
R130	1-246-857-00	CARBON	13K		1/8W	
R131	1-214-156-00	METAL	10K	1%	1/4W	
R132	1-246-803-00	CARBON	47K		1/8W	
R133	1-246-851-00	CARBON	4.3K		1/8W	
R134	1-246-795-00	CARBON	10K		1/8W	
R135	1-246-803-00	CARBON	47K		1/8W	
R136	1-246-803-00	CARBON	47K		1/8W	
R137	1-246-778-00	CARBON	390		1/8W	
R138	1-246-807-00	CARBON	100K		1/8W	
R139	1-214-145-00	METAL	3.6K	1%	1/4W	
R140	1-246-807-00	CARBON	100K		1/8W	
R141	1-246-807-00	CARBON	100K		1/8W	
R142	1-214-134-00	METAL	1.2K	1%	1/4W	
R146	1-246-807-00	CARBON	100K		1/8W	
R147	1-246-807-00	CARBON	100K		1/8W	
R148	1-214-158-00	METAL	12K	1%	1/4W	
R149	1-214-153-00	METAL	7.5K	1%	1/4W	
R154	1-246-783-00	CARBON	1K		1/8W	
R156	1-246-869-00	CARBON	130K		1/8W	
R157	1-246-807-00	CARBON	100K		1/8W	

Ref.No	Part No	Description				Remark
R158	1-246-783-00	CARBON	1K		1/8W	
R159	1-246-807-00	CARBON	100K		1/8W	
R160	1-246-807-00	CARBON	100K		1/8W	
R161	1-246-850-00	CARBON	3.6K		1/8W	
R162	1-214-152-00	METAL	6.8K	1%	1/4W	
R164	1-246-791-00	CARBON	4.7K		1/8W	
R171	1-246-807-00	CARBON	100K		1/8W	

VARIABLE RESISTOR

RV001	1-224-252-XX	RES, ADJ, METAL GLAZE	10K
RV002	1-226-773-00	RES, ADJ, METAL GLAZE	22K
RV003	1-224-251-XX	RES, ADJ, METAL GLAZE	4.7K
RV004	1-224-253-XX	RES, ADJ, METAL GLAZE	22K
RV005	1-224-253-XX	RES, ADJ, METAL GLAZE	22K
RV006	1-224-256-XX	RES, ADJ, METAL GLAZE	220K
RV007	1-224-256-XX	RES, ADJ, METAL GLAZE	220K
RV008	1-224-256-XX	RES, ADJ, METAL GLAZE	220K
RV009	1-224-256-XX	RES, ADJ, METAL GLAZE	220K
RV010	1-226-703-00	RES, ADJ, METAL GLAZE	10K
RV011	1-226-775-00	RES, ADJ, METAL GLAZE	100K
RV012	1-224-256-XX	RES, ADJ, METAL GLAZE	220K
RV013	1-224-256-XX	RES, ADJ, METAL GLAZE	220K
RV014	1-228-270-00	RES, VAR, CARBON	10K
RV015	1-226-775-00	RES, ADJ, METAL GLAZE	100K
RV016	1-224-250-XX	RES, ADJ, METAL GLAZE	2.2K
RV017	1-224-255-XX	RES, ADJ, METAL GLAZE	100K
RV018	1-226-773-00	RES, ADJ, METAL GLAZE	22K

****

♦:A-6715-131-A SS-10A BOARD, COMPLETE
****

3-572-085-00 WASHER, FIBER
♦:3-655-214-00 CLIP, CABLE
♦:3-671-839-00 CASE (MAIN), SHIELD, SS-10
3-703-044-26 LABEL, CAUTION

CAPACITOR

C001	1-123-318-00	ELECT	33MF	20%	16V
C002	1-161-057-00	CERAMIC	0.033MF	10%	50V
C003	1-123-617-00	ELECT	10MF	20%	16V
C004	1-123-617-00	ELECT	10MF	20%	16V
C005	1-161-039-00	CERAMIC	0.001MF	10%	25V
C006	1-123-333-00	ELECT	100MF	20%	16V
C007	1-123-318-00	ELECT	33MF	20%	16V
C008	1-161-057-00	CERAMIC	0.033MF	10%	50V
C009	1-130-482-00	MYLAR	0.0082MF	5%	50V
C010	1-130-482-00	MYLAR	0.0082MF	5%	50V
C011	1-123-612-00	ELECT	2.2MF	20%	50V
C012	1-123-612-00	ELECT	2.2MF	20%	50V
C013	1-123-611-00	ELECT	1MF	20%	50V
C014	1-123-611-00	ELECT	1MF	20%	50V
C015	1-123-611-00	ELECT	1MF	20%	50V

NOTE:

The components identified by shading and mark ⚠ are critical for safety. Replace only with part number specified.

Les composants identifiés par une trame et une marque ⚠ sont critiques pour la sécurité. Ne les remplacer que par une pièce portant le numéro spécifié.

When indicating parts by reference number, please include the board name.

- =>: Due to standardization, interchangeable replacements may be substituted for parts specified in the diagrams.
- Items marked " ♦ " are not stocked since they are seldom required for routine service. Some delay should be anticipated when ordering these items.
- All variable and adjustable resistors have characteristic curve B, unless otherwise noted.

CAPACITORS
- MF : μF, PF : μμF

RESISTORS
- All resistors are in ohms
- F : nonflammable

COILS
- MMH : mH, UH : μH

Ref.No	Part No	Description			Remark
C016	1-123-611-00	ELECT	1MF	20%	50V
C017	1-123-617-00	ELECT	10MF	20%	16V
C018	1-123-318-00	ELECT	33MF	20%	16V
C019	1-161-057-00	CERAMIC	0.033MF	10%	50V
C020	1-123-318-00	ELECT	33MF	20%	16V
C021	1-161-057-00	CERAMIC	0.033MF	10%	50V
C022	1-123-611-00	ELECT	1MF	20%	50V
C023	1-123-611-00	ELECT	1MF	20%	50V
C024	1-161-009-00	CERAMIC	0.0047MF	10%	25V
C026	1-161-039-00	CERAMIC	0.001MF	10%	25V
C028	1-123-611-00	ELECT	1MF	20%	50V
C029	1-123-613-00	ELECT	3.3MF	20%	50V
C030	1-123-318-00	ELECT	33MF	20%	16V
C031	1-161-057-00	CERAMIC	0.033MF	10%	50V
C032	1-161-057-00	CERAMIC	0.033MF	10%	50V
C033	1-123-318-00	ELECT	33MF	20%	16V
C034	1-161-057-00	CERAMIC	0.033MF	10%	50V
C035	1-161-021-00	CERAMIC	0.047MF	10%	25V
C036	1-161-021-00	CERAMIC	0.047MF	10%	25V
C037	1-161-005-00	CERAMIC	0.0022MF	10%	25V
C038	1-123-616-00	ELECT	4.7MF	20%	25V
C039	1-161-057-00	CERAMIC	0.033MF	10%	50V
C040	1-161-057-00	CERAMIC	0.033MF	10%	50V
C041	1-123-611-00	ELECT	1MF	20%	50V
C042	1-161-772-11	CERAMIC	0.1MF	10%	25V
C043	1-161-025-00	CERAMIC	0.1MF	10%	25V
C044	1-161-005-00	CERAMIC	0.0022MF	10%	25V
C045	1-161-005-00	CERAMIC	0.0022MF	10%	25V
C301	1-161-021-00	CERAMIC	0.047MF	10%	25V
C302	1-130-491-51	MYLAR	0.047MF	5%	50V
C303	1-130-491-51	MYLAR	0.047MF	5%	50V
C304	1-123-613-00	ELECT	3.3MF	20%	50V
C305	1-123-613-00	ELECT	3.3MF	20%	50V
C306	1-123-613-00	ELECT	3.3MF	20%	50V
C307	1-130-483-51	MYLAR	0.01MF	5%	50V
C308	1-161-013-00	CERAMIC	0.01MF	10%	25V
C309	1-130-483-51	MYLAR	0.01MF	5%	50V
C310	1-123-296-00	ELECT	220MF	20%	6.3V
C311	1-161-021-00	CERAMIC	0.047MF	10%	25V
C312	1-161-017-00	CERAMIC	0.022MF	10%	25V
C317	1-123-611-00	ELECT	1MF	20%	50V
C318	1-123-618-00	ELECT	22MF	20%	6.3V
C319	1-123-333-00	ELECT	100MF	20%	16V
C321	1-123-318-00	ELECT	33MF	20%	16V
C322	1-123-318-00	ELECT	33MF	20%	16V
C323	1-161-021-00	CERAMIC	0.047MF	10%	25V
C325	1-130-483-51	MYLAR	0.01MF	5%	50V
C326	1-123-306-00	ELECT	47MF	20%	10V
C327	1-123-612-00	ELECT	2.2MF	20%	50V
C328	1-131-404-00	ELECT(SOLID)	0.22MF	10%	25V
C330	1-123-617-00	ELECT	10MF	20%	16V
C331	1-161-017-00	CERAMIC	0.022MF	10%	25V
C332	1-161-016-00	CERAMIC	0.018MF	10%	25V

Ref.No	Part No	Description			Remark
C332	1-161-016-00	CERAMIC	0.018MF	10%	25V
C333	1-161-002-00	CERAMIC	0.0012MF	10%	25V
C334	1-161-013-00	CERAMIC	0.01MF	10%	25V
C335	1-130-493-51	MYLAR	0.068MF	5%	50V
C336	1-123-613-00	ELECT	3.3MF	20%	50V
C337	1-102-978-00	CERAMIC	220PF	5%	50V
C338	1-123-294-00	ELECT	47MF	20%	6.3V
C339	1-123-616-00	ELECT	4.7MF	20%	25V
C340	1-123-616-00	ELECT	4.7MF	20%	25V
C341	1-130-488-00	MYLAR	0.027MF	5%	50V
C342	1-123-622-00	ELECT	22MF	20%	16V
C343	1-123-294-00	ELECT	47MF	20%	6.3V
C344	1-123-295-00	ELECT	100MF	20%	6.3V
C345	1-161-017-00	CERAMIC	0.022MF	10%	25V
C346	1-161-013-00	CERAMIC	0.01MF	10%	25V
C347	1-161-016-00	CERAMIC	0.018MF	10%	25V
C348	1-131-368-00	TANTALUM	3.3MF	20%	16V
C349	1-131-347-00	TANTALUM	1MF	20%	35V
C350	1-123-294-00	ELECT	47MF	20%	6.3V
C351	1-123-612-00	ELECT	2.2MF	20%	50V
C353	1-161-013-00	CERAMIC	0.01MF	10%	25V
C354	1-102-824-00	CERAMIC	430PF	5%	50V
C355	1-161-013-00	CERAMIC	0.01MF	10%	25V
C356	1-123-611-00	ELECT	1MF	20%	50V
C361	1-123-616-00	ELECT	4.7MF	20%	25V
C362	1-123-616-00	ELECT	4.7MF	20%	25V
C370	1-161-021-00	CERAMIC	0.047MF	10%	25V
C371	1-161-021-00	CERAMIC	0.047MF	10%	25V
C372	1-130-486-51	MYLAR	0.018MF	5%	50V
C373	1-123-616-00	ELECT	4.7MF	20%	25V
C374	1-161-021-00	CERAMIC	0.047MF	10%	25V
C401	1-123-021-00	ELECT	0.47MF	30%	50V
C402	1-123-616-00	ELECT	4.7MF	20%	25V
C403	1-101-888-00	CERAMIC	68PF	5%	50V
C601	1-123-612-00	ELECT	2.2MF	20%	50V
C603	1-101-880-00	CERAMIC	47PF	5%	50V
C604	1-101-880-00	CERAMIC	47PF	5%	50V
C605	1-123-617-00	ELECT	10MF	20%	16V
C606	1-123-617-00	ELECT	10MF	20%	16V
C607	1-123-610-00	ELECT	0.47MF	20%	50V
C608	1-123-617-00	ELECT	10MF	20%	16V
C609	1-101-884-00	CERAMIC	56PF	5%	50V
C610	1-161-021-00	CERAMIC	0.047MF	10%	25V
C611	1-161-021-00	CERAMIC	0.047MF	10%	25V
C612	1-161-021-00	CERAMIC	0.047MF	10%	25V
C613	1-161-021-00	CERAMIC	0.047MF	10%	25V
C614	1-161-021-00	CERAMIC	0.047MF	10%	25V
C615	1-161-021-00	CERAMIC	0.047MF	10%	25V
C616	1-161-021-00	CERAMIC	0.047MF	10%	25V
C617	1-161-021-00	CERAMIC	0.047MF	10%	25V
C618	1-161-021-00	CERAMIC	0.047MF	10%	25V
C619	1-123-306-00	ELECT	47MF	20%	10V
C620	1-123-318-00	ELECT	33MF	20%	16V

NOTE:

The components identified by shading and mark ⚠ are critical for safety. Replace only with part number specified.

Les composants identifiés par une trame et une marque ⚠ sont critiques pour la sécurité. Ne les remplacer que par une pièce portant le numéro spécifié.

When indicating parts by reference number, please include the board name.

- =>: Due to standardization, interchangeable replacements may be substituted for parts specified in the diagrams.
- Items marked " ♦ " are not stocked since they are seldom required for routine service. Some delay should be anticipated when ordering these items.
- All variable and adjustable resistors have characteristic curve B, unless otherwise noted.

CAPACITORS
- MF : μF, PF : μμF

RESISTORS
- All resistors are in ohms
- F : nonflammable

COILS
- MMH : mH, UH : μH

SS-10A BOARD

Ref.No	Part No	Description			Remark
C621	1-123-318-00	ELECT	33MF	20%	16V
C622	1-161-023-00	CERAMIC	0.068MF	10%	25V
C630	1-161-021-00	CERAMIC	0.047MF	10%	25V
C640	1-161-017-00	CERAMIC	0.022MF	10%	25V

CONNECTOR

CN001♦	1-560-466-00	PIN, CONNECTOR 3P	
CN002♦	1-560-466-00	PIN, CONNECTOR 3P	
CN003♦	1-560-469-00	PIN, CONNECTOR 6P	
CN301♦	1-560-467-00	PIN, CONNECTOR 4P	
CN302♦	1-560-466-00	PIN, CONNECTOR 3P	
CN303♦	1-560-467-00	PIN, CONNECTOR 4P	
CN304♦	1-560-456-00	PIN, CONNECTOR 2P	
CN305♦	1-560-467-00	PIN, CONNECTOR 4P	
CN306♦	1-560-466-00	PIN, CONNECTOR 3P	
CN307♦	1-560-467-00	PIN, CONNECTOR 4P	
CN308♦	1-560-472-00	PIN, CONNECTOR 12P	
CN309♦	1-560-456-00	PIN, CONNECTOR 2P	
CN310♦	1-560-460-00	PIN, CONNECTOR 4P	
CN601♦	1-560-468-00	PIN, CONNECTOR 5P	
CN602♦	1-560-470-00	PIN, CONNECTOR 8P	
CN603♦	1-560-470-00	PIN, CONNECTOR 8P	
CN604♦	1-560-470-00	PIN, CONNECTOR 8P	
CN608♦	1-560-467-00	PIN, CONNECTOR 4P	
CN609♦	1-560-468-00	PIN, CONNECTOR 5P	
CN610♦	1-560-469-00	PIN, CONNECTOR 6P	
CN611♦	1-560-470-00	PIN, CONNECTOR 8P	
CN612♦	1-560-467-00	PIN, CONNECTOR 4P	
CN613♦	1-560-470-00	PIN, CONNECTOR 8P	
CN614♦	1-560-471-00	PIN, CONNECTOR 10P	
CN615♦	1-560-467-00	PIN, CONNECTOR 4P	
CN616♦	1-560-467-00	PIN, CONNECTOR 4P	
CN617♦	1-560-467-00	PIN, CONNECTOR 4P	
CN618♦	1-560-467-00	PIN, CONNECTOR 4P	
CN619♦	1-560-467-00	PIN, CONNECTOR 4P	
CN620♦	1-560-468-00	PIN, CONNECTOR 5P	
CN621♦	1-560-471-00	PIN, CONNECTOR 10P	
CN622♦	1-560-471-00	PIN, CONNECTOR 10P	
CN623♦	1-560-469-00	PIN, CONNECTOR 6P	
CN624♦	1-560-470-00	PIN, CONNECTOR 8P	
CN625♦	1-560-472-00	PIN, CONNECTOR 12P	
CN626♦	1-560-471-00	PIN, CONNECTOR 10P	
CN627♦	1-560-470-00	PIN, CONNECTOR 8P	

COMPOSITION CIRCUIT BLOCK

CP001	1-232-055-00	COMPOSITION CIRCUIT BLOCK
CP004	1-232-057-00	COMPOSITION CIRCUIT BLOCK
CP005	1-232-058-00	COMPOSITION CIRCUIT BLOCK
CP006	1-232-059-00	COMPOSITION CIRCUIT BLOCK
CP007	1-232-060-00	COMPOSITION CIRCUIT BLOCK
CP008	1-232-060-00	COMPOSITION CIRCUIT BLOCK
CP009	1-232-061-00	COMPOSITION CIRCUIT BLOCK
CP010	1-232-061-00	COMPOSITION CIRCUIT BLOCK
CP011	1-232-062-00	COMPOSITION CIRCUIT BLOCK
CP012	1-232-069-00	COMPOSITION CIRCUIT BLOCK
CP013	1-232-063-00	COMPOSITION CIRCUIT BLOCK
CP014	1-232-059-00	COMPOSITION CIRCUIT BLOCK
CP015	1-232-064-00	COMPOSITION CIRCUIT BLOCK
CP016	1-232-169-00	COMPOSITION CIRCUIT BLOCK
CP017	1-232-169-00	COMPOSITION CIRCUIT BLOCK
CP018	1-232-066-00	COMPOSITION CIRCUIT BLOCK
CP019	1-232-067-00	COMPOSITION CIRCUIT BLOCK
CP020	1-232-059-00	COMPOSITION CIRCUIT BLOCK
CP021	1-232-068-00	COMPOSITION CIRCUIT BLOCK
CP022	1-232-062-00	COMPOSITION CIRCUIT BLOCK
CP023	1-232-061-00	COMPOSITION CIRCUIT BLOCK
CP024	1-232-061-00	COMPOSITION CIRCUIT BLOCK
CP025	1-232-069-00	COMPOSITION CIRCUIT BLOCK
CP026	1-232-139-00	COMPOSITION CIRCUIT BLOCK
CP027	1-232-142-00	COMPOSITION CIRCUIT BLOCK
CP028	1-232-143-00	COMPOSITION CIRCUIT BLOCK
CP030	1-232-144-00	COMPOSITION CIRCUIT BLOCK
CP031	1-232-218-00	COMPOSITION CIRCUIT BLOCK
CP032	1-232-146-00	COMPOSITION CIRCUIT BLOCK
CP033	1-232-147-00	COMPOSITION CIRCUIT BLOCK
CP301	1-232-136-00	COMPOSITION CIRCUIT BLOCK
CP303	1-232-137-00	COMPOSITION CIRCUIT BLOCK
CP304	1-232-138-00	COMPOSITION CIRCUIT BLOCK
CP312	1-232-140-00	COMPOSITION CIRCUIT BLOCK
CP313	1-232-141-00	COMPOSITION CIRCUIT BLOCK
CP315	1-232-151-00	COMPOSITION CIRCUIT BLOCK
CP316	1-232-151-00	COMPOSITION CIRCUIT BLOCK
CP317	1-232-079-00	COMPOSITION CIRCUIT BLOCK
CP318	1-232-071-00	COMPOSITION CIRCUIT BLOCK
CP319	1-232-148-00	COMPOSITION CIRCUIT BLOCK
CP322	1-232-152-00	COMPOSITION CIRCUIT BLOCK
CP323	1-232-148-00	COMPOSITION CIRCUIT BLOCK
CP324	1-232-150-00	COMPOSITION CIRCUIT BLOCK
CP326	1-232-152-00	COMPOSITION CIRCUIT BLOCK
CP328	1-232-126-00	COMPOSITION CIRCUIT BLOCK
CP329	1-232-150-00	COMPOSITION CIRCUIT BLOCK
CP335	1-232-149-00	COMPOSITION CIRCUIT BLOCK
CP601	1-232-158-00	COMPOSITION CIRCUIT BLOCK
CP602	1-232-158-00	COMPOSITION CIRCUIT BLOCK
CP605	1-232-157-00	COMPOSITION CIRCUIT BLOCK
CP606	1-232-159-00	COMPOSITION CIRCUIT BLOCK
CP607	1-232-159-00	COMPOSITION CIRCUIT BLOCK
CP609	1-232-154-00	COMPOSITION CIRCUIT BLOCK
CP610	1-232-155-00	COMPOSITION CIRCUIT BLOCK
CP612	1-232-156-00	COMPOSITION CIRCUIT BLOCK
CP613	1-232-163-00	COMPOSITION CIRCUIT BLOCK
CP614	1-232-163-00	COMPOSITION CIRCUIT BLOCK
CP615	1-232-153-00	COMPOSITION CIRCUIT BLOCK

DIODE

D001	8-719-911-06	DIODE 1SS106

NOTE:

The components identified by shading and mark ⚠ are critical for safety. Replace only with part number specified.

Les composants identifiés par une trame et une marque ⚠ sont critiques pour la sécurité. Ne les remplacer que par une pièce portant le numéro spécifié.

When indicating parts by reference number, please include the board name.

- =>: Due to standardization, interchangeable replacements may be substituted for parts specified in the diagrams.
- Items marked " ♦ " are not stocked since they are seldom required for routine service. Some delay should be anticipated when ordering these items.
- All variable and adjustable resistors have characteristic curve B, unless otherwise noted.

CAPACITORS
- MF : μF, PF : μμF

RESISTORS
- All resistors are in ohms
- F : nonflammable

COILS
- MMH : mH, UH : μH

Ref.No	Part No	Description	Remark
D002	8-719-911-06	DIODE 1SS106	
D003	8-719-911-19	DIODE 1SS119	
D008	8-719-911-19	DIODE 1SS119	
D009	8-719-982-04	DIODE ERB81-004	
D010	8-719-911-19	DIODE 1SS119	
D012	8-719-911-19	DIODE 1SS119	
D013	8-719-982-04	DIODE ERB81-004	
D014	8-719-911-19	DIODE 1SS119	
D015	8-719-911-19	DIODE 1SS119	
D301	8-719-911-06	DIODE 1SS106	
D302	8-719-911-19	DIODE 1SS119	
D303	8-719-982-04	DIODE ERB81-004	
D304	8-719-113-07	DIODE RD13E-B	
D305	8-719-911-06	DIODE 1SS106	
D306	8-719-911-19	DIODE 1SS119	
D307	8-719-911-19	DIODE 1SS119	
D308	8-719-911-06	DIODE 1SS106	
D309	8-719-911-19	DIODE 1SS119	
D310	8-719-911-19	DIODE 1SS119	
D311	8-719-911-19	DIODE 1SS119	
D312	8-719-911-19	DIODE 1SS119	
D313	8-719-911-19	DIODE 1SS119	
D314	8-719-911-19	DIODE 1SS119	
D315	8-719-911-19	DIODE 1SS119	
D316	8-719-911-19	DIODE 1SS119	
D317	8-719-911-19	DIODE 1SS119	
D318	8-719-911-19	DIODE 1SS119	
D401	8-719-911-19	DIODE 1SS119	
D603	=>8-719-901-33	DIODE 1SS133	
D604	8-719-911-06	DIODE 1SS106	
D612	8-719-911-06	DIODE 1SS106	

FUSE

F601 ⚠	1-532-625-00	FUSE, GLASS TUBE 1.25A 125V	
F602 ⚠	1-532-624-00	FUSE, GLASS TUBE 0.5A 125V	
F603 ⚠	1-532-595-00	FUSE, GLASS TUBE 3.15A 125V	
F604	1-532-605-00	FUSE, ELECTRIC CURRENT	

IC

IC001	8-759-103-93	IC UPC393C	
IC002	8-759-132-40	IC UPC324C	
IC003	8-759-132-40	IC UPC324C	
IC004	8-759-103-93	IC UPC393C	
IC005	8-743-980-00	IC BX-3980	
IC006	8-743-976-00	IC BX-3976	
IC301	8-751-940-02	IC CX-194A-2	
IC302	=>8-743-984-00	IC BX-3984	
IC303	8-743-983-00	IC BX-3983	
IC304	8-759-132-40	IC UPC324C	
IC305	8-759-904-94	IC TL494CN	
IC306	8-743-978-00	IC BX-3978	
IC307	8-759-240-30	IC TC4030BP	
IC308	8-759-240-53	IC TC4053BP	
IC309	8-741-103-90	IC BX-1039	
IC310	8-743-981-00	IC BX-3981	
IC311	8-741-103-80	IC BX-1038	
IC312	8-759-250-26	IC TC5026BP	
IC313	8-759-240-51	IC TC4051BP	
IC314	8-741-013-10	IC BX-1013-1	
IC601	8-759-985-27	IC MB8845-527	
IC602	8-759-985-28	IC MB8845-528	
IC603	8-759-900-45	IC MB8845-549	
IC604	8-759-133-90	IC UPC339C	
IC605	8-759-220-04	IC TC40H004P	
IC606	8-759-240-69	IC TC4069UBP	
IC607	=>8-759-240-13	IC TC4013BP	
IC608	8-759-987-47	IC MB8747	
IC609	8-759-987-47	IC MB8747	
IC610	8-743-988-00	IC BX-3988	
IC611	8-759-900-04	IC SN74LS04N	
IC612	8-741-101-60	IC BX-1016	

COIL

L001	1-408-519-00	COIL, CHOKE 42UH	
L002	1-408-519-00	COIL, CHOKE 42UH	
L003	1-408-519-00	COIL, CHOKE 42UH	
L301	1-408-518-00	COIL, CHOKE 1MMH	
L302	1-459-232-00	COIL, CORE 90UH	
L601	1-408-409-00	MICRO INDUCTOR 10UH	
L602	1-408-409-00	MICRO INDUCTOR 10UH	

TRANSISTOR

Q001	8-729-117-54	TRANSISTOR 2SA1175	
Q002	8-729-178-54	TRANSISTOR 2SC2785	
Q003	8-729-178-54	TRANSISTOR 2SC2785	
Q004	8-729-178-54	TRANSISTOR 2SC2785	
Q006	8-729-178-54	TRANSISTOR 2SC2785	
Q007	8-729-178-54	TRANSISTOR 2SC2785	
Q008	8-729-117-54	TRANSISTOR 2SA1175	
Q009	8-729-178-54	TRANSISTOR 2SC2785	
Q010	8-729-178-54	TRANSISTOR 2SC2785	
Q011	8-729-178-54	TRANSISTOR 2SC2785	
Q012	8-729-178-54	TRANSISTOR 2SC2785	
Q013	8-729-178-54	TRANSISTOR 2SC2785	
Q014	8-729-178-54	TRANSISTOR 2SC2785	
Q015	8-729-178-54	TRANSISTOR 2SC2785	
Q016	8-729-117-54	TRANSISTOR 2SA1175	
Q017	8-729-113-33	TRANSISTOR 2SB733	
Q018	8-729-113-33	TRANSISTOR 2SB733	
Q019	8-729-178-54	TRANSISTOR 2SC2785	
Q020	8-729-178-54	TRANSISTOR 2SC2785	
Q021	8-729-178-54	TRANSISTOR 2SC2785	
Q022	8-729-178-54	TRANSISTOR 2SC2785	
Q023	8-729-178-54	TRANSISTOR 2SC2785	
Q024	8-729-117-54	TRANSISTOR 2SA1175	
Q025	8-729-113-33	TRANSISTOR 2SB733	

NOTE:

The components identified by shading and mark ⚠ are critical for safety. Replace only with part number specified.

Les composants identifiés par une trame et une marque ⚠ sont critiques pour la sécurité. Ne les remplacer que par une pièce portant le numéro spécifié.

When indicating parts by reference number, please include the board name.

- =>: Due to standardization, interchangeable replacements may be substituted for parts specified in the diagrams.
- Items marked " ♦ " are not stocked since they are seldom required for routine service. Some delay should be anticipated when ordering these items.
- All variable and adjustable resistors have characteristic curve B, unless otherwise noted.

CAPACITORS
- MF : μF, PF : μμF

RESISTORS
- All resistors are in ohms
- F : nonflammable

COILS
- MMH : mH, UH : μH

SS-10A BOARD

Ref.No	Part No	Description	Remark
Q026	8-729-113-33	TRANSISTOR 2SB733	
Q027	8-729-178-54	TRANSISTOR 2SC2785	
Q028	8-729-178-54	TRANSISTOR 2SC2785	
Q029	8-729-178-54	TRANSISTOR 2SC2785	
Q030	8-729-117-54	TRANSISTOR 2SA1175	
Q301	8-729-178-54	TRANSISTOR 2SC2785	
Q302	8-729-177-32	TRANSISTOR 2SD773	
Q303	8-729-117-54	TRANSISTOR 2SA1175	
Q304	=>8-729-113-33	TRANSISTOR 2SB733-U2	
Q305	8-729-178-54	TRANSISTOR 2SC2785	
Q307	8-729-178-54	TRANSISTOR 2SC2785	
Q308	8-729-178-54	TRANSISTOR 2SC2785	
Q309	8-729-117-54	TRANSISTOR 2SA1175	
Q310	8-729-178-54	TRANSISTOR 2SC2785	
Q311	8-729-178-54	TRANSISTOR 2SC2785	
Q314	8-729-178-54	TRANSISTOR 2SC2785	
Q315	8-729-178-54	TRANSISTOR 2SC2785	
Q317	8-729-178-54	TRANSISTOR 2SC2785	
Q318	8-729-117-54	TRANSISTOR 2SA1175	
Q320	8-729-178-54	TRANSISTOR 2SC2785	
Q321	8-729-117-54	TRANSISTOR 2SA1175	
Q322	8-729-117-54	TRANSISTOR 2SA1175	
Q324	8-729-178-54	TRANSISTOR 2SC2785	
Q325	8-729-178-54	TRANSISTOR 2SC2785	
Q326	8-729-117-54	TRANSISTOR 2SA1175	
Q327	8-729-178-54	TRANSISTOR 2SC2785	
Q328	8-729-178-54	TRANSISTOR 2SC2785	
Q401	8-729-178-54	TRANSISTOR 2SC2785	
Q601	8-729-178-54	TRANSISTOR 2SC2785	
Q602	8-729-178-54	TRANSISTOR 2SC2785	
Q603	8-729-178-54	TRANSISTOR 2SC2785	
Q604	8-729-113-33	TRANSISTOR 2SB733	
Q605	8-729-178-54	TRANSISTOR 2SC2785	
Q606	8-729-178-54	TRANSISTOR 2SC2785	
Q607	8-729-178-54	TRANSISTOR 2SC2785	
Q613	8-729-178-54	TRANSISTOR 2SC2785	
Q614	8-729-178-54	TRANSISTOR 2SC2785	
Q615	8-729-178-54	TRANSISTOR 2SC2785	
Q616	8-729-178-54	TRANSISTOR 2SC2785	
Q617	8-729-178-54	TRANSISTOR 2SC2785	
Q618	8-729-178-54	TRANSISTOR 2SC2785	
Q620	8-729-178-54	TRANSISTOR 2SC2785	
Q621	8-729-178-54	TRANSISTOR 2SC2785	
Q624	8-729-117-54	TRANSISTOR 2SA1175	
Q625	8-729-117-54	TRANSISTOR 2SA1175	
Q626	8-729-117-54	TRANSISTOR 2SA1175	
Q640	8-729-178-54	TRANSISTOR 2SC2785	

RESISTOR

Ref.No	Part No	Description			Remark
R011	1-246-803-00	CARBON	47K	1/8W	
R014	1-247-055-00	CARBON	300K	1/8W	
R017	1-246-803-00	CARBON	47K	1/8W	
R018	1-246-859-00	CARBON	20K	1/8W	
R020	1-246-799-00	CARBON	22K	1/8W	
R021	1-246-803-00	CARBON	47K	1/8W	
R022	1-246-794-00	CARBON	8.2K	1/8W	
R023	1-246-785-00	CARBON	1.5K	1/8W	
R030	1-246-803-00	CARBON	47K	1/8W	
R031	1-246-791-00	CARBON	4.7K	1/8W	
R032	1-246-803-00	CARBON	47K	1/8W	
R035	1-246-803-00	CARBON	47K	1/8W	
R037	1-246-783-00	CARBON	1K	1/8W	
R038	1-246-799-00	CARBON	22K	1/8W	
R041	1-246-799-00	CARBON	22K	1/8W	
R042	1-246-799-00	CARBON	22K	1/8W	
R043	1-246-795-00	CARBON	10K	1/8W	
R044	1-246-803-00	CARBON	47K	1/8W	
R045	1-246-449-00	CARBON	100 5%	1/4W	
R046	1-246-457-00	CARBON	220 5%	1/4W	
R055	1-244-861-00	CARBON	330 5%	1/2W	
R056	1-246-783-00	CARBON	1K	1/8W	
R057 ⚠	1-217-612-00	WIREWOUND	0.1	2W	F
R058	1-246-801-00	CARBON	33K	1/8W	
R060	1-246-860-00	CARBON	24K	1/8W	
R064	1-247-049-00	CARBON	470K	1/8W	
R068	1-246-795-00	CARBON	10K	1/8W	
R071	1-247-057-00	CARBON	430K	1/8W	
R073	1-246-795-00	CARBON	10K	1/8W	
R080	1-246-783-00	CARBON	1K	1/8W	
R081	1-246-807-00	CARBON	100K	1/8W	
R082	1-247-049-00	CARBON	470K	1/8W	
R083	1-246-791-00	CARBON	4.7K	1/8W	
R084	1-246-791-00	CARBON	4.7K	1/8W	
R085	1-246-799-00	CARBON	22K	1/8W	
R089	1-246-795-00	CARBON	10K	1/8W	
R090	1-247-049-00	CARBON	470K	1/8W	
R091	1-246-807-00	CARBON	100K	1/8W	
R093	1-246-803-00	CARBON	47K	1/8W	
R094	1-246-795-00	CARBON	10K	1/8W	
R095	1-246-449-00	CARBON	100 5%	1/4W	
R096	1-246-457-00	CARBON	220 5%	1/4W	
R103	1-244-861-00	CARBON	330 5%	1/2W	
R106	1-246-783-00	CARBON	1K	1/8W	
R108	1-246-803-00	CARBON	47K	1/8W	
R110	1-246-811-00	CARBON	220K	1/8W	
R111	1-246-803-00	CARBON	47K	1/8W	
R113	1-246-803-00	CARBON	47K	1/8W	
R114	1-246-803-00	CARBON	47K	1/8W	
R115	1-246-801-00	CARBON	33K	1/8W	
R116	1-246-847-00	CARBON	2K	1/8W	
R117	1-246-799-00	CARBON	22K	1/8W	
R118	1-246-799-00	CARBON	22K	1/8W	
R301	1-246-799-00	CARBON	22K	1/8W	
R302	1-246-793-00	CARBON	6.8K	1/8W	
R303	1-246-797-00	CARBON	15K	1/8W	
R304	1-246-795-00	CARBON	10K	1/8W	

NOTE:

The components identified by shading and mark ⚠ are critical for safety. Replace only with part number specified.

Les composants identifiés par une trame et une marque ⚠ sont critiques pour la sécurité. Ne les remplacer que par une pièce portant le numéro spécifié.

When indicating parts by reference number, please include the board name.

- =>: Due to standardization, interchangeable replacements may be substituted for parts specified in the diagrams.
- Items marked " ♦ " are not stocked since they are seldom required for routine service. Some delay should be anticipated when ordering these items.
- All variable and adjustable resistors have characteristic curve B, unless otherwise noted.

CAPACITORS
- MF : μF, PF : μμF

RESISTORS
- All resistors are in ohms
- F : nonflammable

COILS
- MMH : mH, UH : μH

Ref.No	Part No	Description				Remark
R310	1-246-795-00	CARBON	10K		1/8W	
R311	1-246-795-00	CARBON	10K		1/8W	
R315	1-246-791-00	CARBON	4.7K		1/8W	
R316	1-246-805-00	CARBON	68K		1/8W	
R317	1-246-803-00	CARBON	47K		1/8W	
R318	1-246-852-00	CARBON	5.1K		1/8W	
R321	1-246-783-00	CARBON	1K		1/8W	
R322 ⚠	1-212-356-00	METAL	0.47	5%	1W	F
R323	1-246-799-00	CARBON	22K		1/8W	
R327	1-246-797-00	CARBON	15K		1/8W	
R330	1-246-788-00	CARBON	2.7K		1/8W	
R331	1-246-809-00	CARBON	150K		1/8W	
R334	1-246-801-00	CARBON	33K		1/8W	
R337	1-246-801-00	CARBON	33K		1/8W	
R338	1-246-809-00	CARBON	150K		1/8W	
R339	1-246-810-00	CARBON	180K		1/8W	
R340	1-246-788-00	CARBON	2.7K		1/8W	
R342	1-246-801-00	CARBON	33K		1/8W	
R344	1-246-801-00	CARBON	33K		1/8W	
R345	1-246-801-00	CARBON	33K		1/8W	
R346	1-246-807-00	CARBON	100K		1/8W	
R347	1-246-806-00	CARBON	82K		1/8W	
R348	1-246-801-00	CARBON	33K		1/8W	
R353	1-246-769-00	CARBON	68		1/8W	
R354	1-246-795-00	CARBON	10K		1/8W	
R355	1-246-795-00	CARBON	10K		1/8W	
R358	1-246-795-00	CARBON	10K		1/8W	
R363	1-246-809-00	CARBON	150K		1/8W	
R364	1-246-801-00	CARBON	33K		1/8W	
R365	1-246-866-00	CARBON	75K		1/8W	
R366	1-246-859-00	CARBON	20K		1/8W	
R367	1-246-799-00	CARBON	22K		1/8W	
R368	1-246-804-00	CARBON	56K		1/8W	
R369	1-246-800-00	CARBON	27K		1/8W	
R370	1-246-802-00	CARBON	39K		1/8W	
R371	1-246-795-00	CARBON	10K		1/8W	
R373	1-246-783-00	CARBON	1K		1/8W	
R374	1-246-804-00	CARBON	56K		1/8W	
R375	1-246-795-00	CARBON	10K		1/8W	
R376	1-246-795-00	CARBON	10K		1/8W	
R377	1-246-795-00	CARBON	10K		1/8W	
R378	1-246-799-00	CARBON	22K		1/8W	
R381	1-246-783-00	CARBON	1K		1/8W	
R382	1-246-795-00	CARBON	10K		1/8W	
R383	1-246-803-00	CARBON	47K		1/8W	
R387	1-246-795-00	CARBON	10K		1/8W	
R390	1-246-851-00	CARBON	4.3K		1/8W	
R391	1-246-803-00	CARBON	47K		1/8W	
R392	1-246-799-00	CARBON	22K		1/8W	
R393	1-246-799-00	CARBON	22K		1/8W	
R394	1-246-795-00	CARBON	10K		1/8W	
R396	1-246-810-00	CARBON	180K		1/8W	
R397	1-246-801-00	CARBON	33K		1/8W	

Ref.No	Part No	Description				Remark
R399	1-246-837-00	CARBON	300		1/8W	
R400	1-246-798-00	CARBON	18K		1/8W	
R401	1-246-779-00	CARBON	470		1/8W	
R404	1-246-801-00	CARBON	33K		1/8W	
R407	1-246-803-00	CARBON	47K		1/8W	
R411	1-246-803-00	CARBON	47K		1/8W	
R412	1-246-795-00	CARBON	10K		1/8W	
R414	1-246-783-00	CARBON	1K		1/8W	
R415	1-246-803-00	CARBON	47K		1/8W	
R416	1-246-799-00	CARBON	22K		1/8W	
R451	1-247-047-00	CARBON	330K		1/8W	
R452	1-246-797-00	CARBON	15K		1/8W	
R453	1-247-054-00	CARBON	240K		1/8W	
R460	1-246-795-00	CARBON	10K		1/8W	
R468	1-246-791-00	CARBON	4.7K		1/8W	
R473	1-246-803-00	CARBON	47K		1/8W	
R474	1-246-787-00	CARBON	2.2K		1/8W	
R479	1-246-807-00	CARBON	100K		1/8W	
R480	1-246-805-00	CARBON	68K		1/8W	
R481	1-246-805-00	CARBON	68K		1/8W	
R482	1-246-805-00	CARBON	68K		1/8W	
R483	1-246-801-00	CARBON	33K		1/8W	
R484	1-246-791-00	CARBON	4.7K		1/8W	
R487	1-246-795-00	CARBON	10K		1/8W	
R488	1-246-800-00	CARBON	27K		1/8W	
R489	1-246-845-00	CARBON	1.3K		1/8W	
R490	1-246-845-00	CARBON	1.3K		1/8W	
R491	1-246-845-00	CARBON	1.3K		1/8W	
R492	1-246-797-00	CARBON	15K		1/8W	
R495	1-246-444-00	CARBON	62	5%	1/4W	
R496	1-246-779-00	CARBON	470		1/8W	
R498	1-246-803-00	CARBON	47K		1/8W	
R499	1-246-791-00	CARBON	4.7K		1/8W	
R501	1-246-850-00	CARBON	3.6K		1/8W	
R502	1-246-852-00	CARBON	5.1K		1/8W	
R503	1-246-759-00	CARBON	10		1/8W	
R601	1-246-799-00	CARBON	22K		1/8W	
R602	1-246-807-00	CARBON	100K		1/8W	
R603	1-246-799-00	CARBON	22K		1/8W	
R605	1-246-807-00	CARBON	100K		1/8W	
R606	1-246-803-00	CARBON	47K		1/8W	
R607	1-246-791-00	CARBON	4.7K		1/8W	
R608	1-246-807-00	CARBON	100K		1/8W	
R609	1-246-469-00	CARBON	680	5%	1/4W	
R610	1-246-803-00	CARBON	47K		1/8W	
R611	1-246-807-00	CARBON	100K		1/8W	
R612	1-246-807-00	CARBON	100K		1/8W	
R613	1-246-803-00	CARBON	47K		1/8W	
R615	1-246-783-00	CARBON	1K		1/8W	
R616	1-246-859-00	CARBON	20K		1/8W	
R617	1-246-795-00	CARBON	10K		1/8W	
R618	1-246-791-00	CARBON	4.7K		1/8W	
R627	1-246-791-00	CARBON	4.7K		1/8W	

NOTE:

The components identified by shading and mark ⚠ are critical for safety. Replace only with part number specified.

Les composants identifiés par une trame et une marque ⚠ sont critiques pour la sécurité. Ne les remplacer que par une pièce portant le numéro spécifié.

When indicating parts by reference number, please include the board name.

- =>: Due to standardization, interchangeable replacements may be substituted for parts specified in the diagrams.
- Items marked " ♦ " are not stocked since they are seldom required for routine service. Some delay should be anticipated when ordering these items.
- All variable and adjustable resistors have characteristic curve B, unless otherwise noted.

CAPACITORS
- MF : μF, PF : μμF

RESISTORS
- All resistors are in ohms
- F : nonflammable

COILS
- MMH : mH, UH : μH

SS-10A BOARD

Ref.No	Part No	Description			Remark
R628	1-246-791-00	CARBON	4.7K	1/8W	
R629	1-246-791-00	CARBON	4.7K	1/8W	
R630	1-246-791-00	CARBON	4.7K	1/8W	
R631	1-246-791-00	CARBON	4.7K	1/8W	
R632	1-246-791-00	CARBON	4.7K	1/8W	
R633	1-246-801-00	CARBON	33K	1/8W	
R633	1-246-803-00	CARBON	47K	1/8W	
R634	1-246-803-00	CARBON	47K	1/8W	
R635	1-246-803-00	CARBON	47K	1/8W	
R640	1-247-049-00	CARBON	470K	1/8W	
R645	1-246-795-00	CARBON	10K	1/8W	
R648	1-246-791-00	CARBON	4.7K	1/8W	
R649	1-246-791-00	CARBON	4.7K	1/8W	
R650	1-246-791-00	CARBON	4.7K	1/8W	
R660	1-246-803-00	CARBON	47K	1/8W	
R690	1-246-783-00	CARBON	1K	1/8W	
R691	1-246-803-00	CARBON	47K	1/8W	
R693	1-246-783-00	CARBON	1K	1/8W	
R694	1-246-795-00	CARBON	10K	1/8W	
R695	1-246-795-00	CARBON	10K	1/8W	
R699	1-246-807-00	CARBON	100K	1/8W	
R703	1-246-751-00	CARBON	2.2	1/8W	

VARIABLE RESISTOR

RV001	1-226-774-00	RES, ADJ, METAL GLAZE	47K
RV002	1-226-773-00	RES, ADJ, METAL GLAZE	22K
RV301	1-226-753-00	RES, ADJ, SOLID	47K
RV302	1-224-254-XX	RES, ADJ, METAL GLAZE	47K
RV303	1-226-771-00	RES, ADJ, METAL GLAZE	1K
RV304	1-226-753-00	RES, ADJ, SOLID	47K
RV305	1-226-753-00	RES, ADJ, SOLID	47K
RV306	1-226-774-00	RES, ADJ, METAL GLAZE	47K
RV307	1-226-703-00	RES, ADJ, METAL GLAZE	10K
RV308	1-226-703-00	RES, ADJ, METAL GLAZE	10K
RV309	1-226-703-00	RES, ADJ, METAL GLAZE	10K
RV310	1-226-703-00	RES, ADJ, METAL GLAZE	10K
RV314	1-226-753-00	RES, ADJ, SOLID	47K
RV315	1-226-701-00	RES, ADJ, METAL GLAZE	220
RV316	1-226-701-00	RES, ADJ, METAL GLAZE	220
RV317	1-226-753-00	RES, ADJ, SOLID	47K

THERMISTOR

TH001	1-800-200-00	THERMISTOR S-3K
TH301	1-800-200-00	THERMISTOR S-3K

CRYSTAL

X601	1-527-726-00	VIBRATOR, CRYSTAL

FU-3 BOARD

Ref.No	Part No	Description	Remark
♦	A-6717-225-A	FU-3 BOARD, COMPLETE **********	
♦	3-670-094-02	HOLDER, LED, 6 GANG	
♦	3-670-095-00	HOLDER, LED	
♦	3-674-312-00	COVER, 3 GANG LED	
♦	3-674-313-00	COVER, LED	
♦	3-674-314-00	PROTECTOR (A)	
♦	3-674-315-00	PROTECTOR (B)	
♦	3-674-316-00	RETAINER, HARNESS	

CAPACITOR

C001	1-161-013-00	CERAMIC	0.01MF	10%	25V
C002	1-123-617-00	ELECT	10MF	20%	16V
C003	1-161-321-00	CERAMIC	680PF	10%	50V

DIODE

D001	8-719-812-30	DIODE TL0123
D002	8-719-914-02	DIODE BR3402S
D003	8-719-914-33	DIODE PG3432SY
D004	8-719-812-32	DIODE TLY123
D005	8-719-812-32	DIODE TLY123
D006	8-719-812-32	DIODE TLY123
D008	8-719-914-02	DIODE BR3402S
D009	8-719-932-22	DIODE GL-9NG922B
D010	8-719-932-22	DIODE GL-9NG922B
D011	8-719-932-22	DIODE GL-9NG922B
D012	8-719-932-22	DIODE GL-9NG922B
D013	8-719-932-22	DIODE GL-9NG922B
D014	8-719-932-22	DIODE GL-9NG922B
D015	8-719-914-33	DIODE PG3432SY
D016	8-719-914-33	DIODE PG3432SY
D017	8-719-914-33	DIODE PG3432SY
D018	8-719-914-33	DIODE PG3432SY
D019	8-719-914-33	DIODE PG3432SY
D020	8-719-914-33	DIODE PG3432SY
D021	8-719-914-33	DIODE PG3432SY
D022	8-719-914-33	DIODE PG3432SY
D023	8-719-914-33	DIODE PG3432SY
D024	8-719-812-32	DIODE TLY123
D026	8-719-812-32	DIODE TLY123
D027	8-719-812-32	DIODE TLY123
D028	8-719-812-32	DIODE TLY123
D029	8-719-911-06	DIODE 1SS106
D030	8-719-911-06	DIODE 1SS106
D031	8-719-911-06	DIODE 1SS106

IC

IC001	8-759-987-58	IC MB8758

TRANSISTOR

Q001	8-729-178-54	TRANSISTOR 2SC2785
Q002	8-729-178-54	TRANSISTOR 2SC2785

NOTE:

The components identified by shading and mark ⚠ are critical for safety. Replace only with part number specified.

Les composants identifiés par une trame et une marque ⚠ sont critiques pour la sécurité. Ne les remplacer que par une pièce portant le numéro spécifié.

When indicating parts by reference number, please include the board name.

- =>: Due to standardization, interchangeable replacements may be substituted for parts specified in the diagrams.
- Items marked " ♦ " are not stocked since they are seldom required for routine service. Some delay should be anticipated when ordering these items.
- All variable and adjustable resistors have characteristic curve B, unless otherwise noted.

CAPACITORS
- MF : μF, PF : μμF

RESISTORS
- All resistors are in ohms
- F : nonflammable

COILS
- MMH : mH, UH : μH

Ref.No	Part No	Description			Remark
Q003	8-729-178-54	TRANSISTOR 2SC2785			
Q004	8-729-178-54	TRANSISTOR 2SC2785			
Q005	8-729-178-54	TRANSISTOR 2SC2785			
Q006	8-729-178-54	TRANSISTOR 2SC2785			
Q007	8-729-178-54	TRANSISTOR 2SC2785			
Q008	8-729-178-54	TRANSISTOR 2SC2785			
		RESISTOR			
R001	1-246-776-00	CARBON	270	1/8W	
R002	1-246-776-00	CARBON	270	1/8W	
R003	1-246-773-00	CARBON	150	1/8W	
R005	1-246-776-00	CARBON	270	1/8W	
R006	1-246-795-00	CARBON	10K	1/8W	
R007	1-246-795-00	CARBON	10K	1/8W	
R008	1-246-795-00	CARBON	10K	1/8W	
R015	1-246-773-00	CARBON	150	1/8W	
R016	1-246-773-00	CARBON	150	1/8W	
R018	1-246-776-00	CARBON	270	1/8W	
R019	1-246-773-00	CARBON	150	1/8W	
R020	1-246-773-00	CARBON	150	1/8W	
		SWITCH			
S001	1-553-766-00	SWITCH, KEY BOARD			
S002	1-553-766-00	SWITCH, KEY BOARD			
S003	1-553-766-00	SWITCH, KEY BOARD			
S004	1-553-766-00	SWITCH, KEY BOARD			
S005	1-553-766-00	SWITCH, KEY BOARD			
S006	1-553-766-00	SWITCH, KEY BOARD			
S007	1-553-766-00	SWITCH, KEY BOARD			
S008	1-553-766-00	SWITCH, KEY BOARD			
S009	1-553-766-00	SWITCH, KEY BOARD			
S010	1-553-766-00	SWITCH, KEY BOARD			
S011	1-553-766-00	SWITCH, KEY BOARD			
S012	1-553-766-00	SWITCH, KEY BOARD			
S013	1-553-766-00	SWITCH, KEY BOARD			
S014	1-553-766-00	SWITCH, KEY BOARD			
S016	1-553-766-00	SWITCH, KEY BOARD			
S017	1-553-766-00	SWITCH, KEY BOARD			
S018	1-553-766-00	SWITCH, KEY BOARD			
S019	1-553-766-00	SWITCH, KEY BOARD			
S020	1-553-766-00	SWITCH, KEY BOARD			
S021	1-553-766-00	SWITCH, KEY BOARD			
S022	1-553-766-00	SWITCH, KEY BOARD			
S023	1-553-766-00	SWITCH, KEY BOARD			

****

♦:1-606-231-00 MB-3 BOARD
****

CAPACITOR

C329	1-161-057-00	CERAMIC	0.033MF	10%	50V
C802	1-123-611-00	ELECT	1MF	20%	50V

Ref.No	Part No	Description			Remark
		DIODE			
D319	8-719-911-19	DIODE 1SS119			
		TRANSISTOR			
Q803	8-729-117-54	TRANSISTOR 2SA1175			
		RESISTOR			
R395	1-246-804-00	CARBON	56K	1/8W	
R805	1-246-807-00	CARBON	100K	1/8W	

****

♦:A-6717-236-A RR-1A BOARD, COMPLETE
****

3-572-085-00 WASHER, FIBER
♦:3-670-059-00 BRACKET (RIGHT), RR
♦:3-670-060-00 BRACKET (LEFT), RR
♦:3-671-850-00 CASE, SHIELD, RR-1
3-701-822-00 HOLDER, WIRE

CAPACITOR

C001	1-123-613-00	ELECT	3.3MF	20%	50V
C002	1-161-021-00	CERAMIC	0.047MF	10%	25V
C003	1-102-973-00	CERAMIC	100PF	5%	50V
C101	1-161-021-00	CERAMIC	0.047MF	10%	25V
C103	1-102-111-00	CERAMIC	270PF	10%	50V
C104	1-102-824-00	CERAMIC	470PF	5%	50V
C201	1-161-021-00	CERAMIC	0.047MF	10%	25V
C202	1-102-824-00	CERAMIC	470PF	5%	50V
C203	1-102-111-00	CERAMIC	270PF	10%	50V
C205	1-123-617-00	ELECT	10MF	20%	16V
C206	1-123-821-00	ELECT	47MF	20%	16V
C207	1-161-039-00	CERAMIC	0.001MF	10%	25V
C208	1-161-039-00	CERAMIC	0.001MF	10%	25V
C209	1-102-112-00	CERAMIC	330PF	10%	50V
C301	1-123-839-00	ELECT	1000MF	20%	16V
C302	1-123-820-00	ELECT	33MF	20%	16V
C303	1-123-611-00	ELECT	1MF	20%	50V

CONNECTOR

CN101♦	1-560-463-00	PIN, CONNECTOR 8P
CN102♦	1-560-469-00	PIN, CONNECTOR 6P
CN103♦	1-560-464-00	PIN, CONNECTOR 10P
CN201♦	1-560-466-00	PIN, CONNECTOR 3P
CN202♦	1-560-467-00	PIN, CONNECTOR 4P
CN203♦	1-560-470-00	PIN, CONNECTOR 8P
CN301♦	1-560-471-00	PIN, CONNECTOR 10P
CN302♦	1-560-456-00	PIN, CONNECTOR 2P
CN303♦	1-560-470-00	PIN, CONNECTOR 8P

DIODE

D001	8-719-911-19	DIODE 1SS119

NOTE:

The components identified by shading and mark ⚠ are critical for safety. Replace only with part number specified.

Les composants identifiés par une trame et une marque ⚠ sont critiques pour la sécurité. Ne les remplacer que par une pièce portant le numéro spécifié.

When indicating parts by reference number, please include the board name.

- =>: Due to standardization, interchangeable replacements may be substituted for parts specified in the diagrams.
- Items marked " ♦ " are not stocked since they are seldom required for routine service. Some delay should be anticipated when ordering these items.
- All variable and adjustable resistors have characteristic curve B, unless otherwise noted.

CAPACITORS
- MF : μF, PF : μμF

RESISTORS
- All resistors are in ohms
- F : nonflammable

COILS
- MMH : mH, UH : μH

RR-1A BOARD

Ref.No	Part No	Description	Remark
D102	8-719-911-19	DIODE 1SS119	
D201	8-719-100-30	DIODE RD5.1E-B2	
D301	8-719-911-19	DIODE 1SS119	
D302	8-719-911-19	DIODE 1SS119	
D305	8-719-200-02	DIODE 10E-2	
D306	8-719-200-02	DIODE 10E-2	
D307	8-719-200-02	DIODE 10E-2	
D308	8-719-200-02	DIODE 10E-2	
D309	8-719-200-02	DIODE 10E-2	
D310	8-719-200-02	DIODE 10E-2	
D311	8-719-200-02	DIODE 10E-2	
D312	8-719-200-02	DIODE 10E-2	
D313	8-719-200-02	DIODE 10E-2	
D314	8-719-200-02	DIODE 10E-2	
D315	8-719-200-02	DIODE 10E-2	
D316	8-719-200-02	DIODE 10E-2	
D317	8-719-911-19	DIODE 1SS119	
D318	8-719-911-19	DIODE 1SS119	
D319	8-719-200-02	DIODE 10E-2	
		IC	
IC001	8-759-103-93	IC UPC393C	
IC101	8-759-115-18	IC UPD651G-518	
IC201	8-759-115-17	IC UPD651G-517	
		TRANSISTOR	
Q101	8-729-178-54	TRANSISTOR 2SC2785	
Q102	8-729-178-54	TRANSISTOR 2SC2785	
Q103	8-729-178-54	TRANSISTOR 2SC2785	
Q104	8-729-178-54	TRANSISTOR 2SC2785	
Q105	8-729-178-54	TRANSISTOR 2SC2785	
Q106	8-729-178-54	TRANSISTOR 2SC2785	
Q108	8-729-178-54	TRANSISTOR 2SC2785	
Q203	8-729-178-54	TRANSISTOR 2SC2785	
Q204	8-729-178-54	TRANSISTOR 2SC2785	
Q301	8-729-177-32	TRANSISTOR 2SD773	
Q302	8-729-177-32	TRANSISTOR 2SD773	
Q303	8-729-113-32	TRANSISTOR 2SB733	
Q304	8-729-113-32	TRANSISTOR 2SB733	
Q305	8-729-177-32	TRANSISTOR 2SD773	
Q306	8-729-177-32	TRANSISTOR 2SD773	
Q307	8-729-113-32	TRANSISTOR 2SB733	
Q308	8-729-113-32	TRANSISTOR 2SB733	
Q309	8-729-116-42	TRANSISTOR 2SD1164	
Q310	8-729-116-42	TRANSISTOR 2SD1164	
Q311	8-729-116-42	TRANSISTOR 2SD1164	
Q312	8-729-116-42	TRANSISTOR 2SD1164	
Q313	8-729-178-54	TRANSISTOR 2SC2785	
Q314	8-729-178-54	TRANSISTOR 2SC2785	
Q315	8-729-178-54	TRANSISTOR 2SC2785	
Q316	8-729-178-54	TRANSISTOR 2SC2785	
Q332	8-729-117-54	TRANSISTOR 2SA1175	

Ref.No	Part No	Description			Remark
		RESISTOR			
R001	1-246-799-00	CARBON	22K	1/8W	
R002	1-246-807-00	CARBON	100K	1/8W	
R003	1-246-795-00	CARBON	10K	1/8W	
R004	1-246-788-00	CARBON	2.7K	1/8W	
R005	1-246-795-00	CARBON	10K	1/8W	
R006	1-246-805-00	CARBON	68K	1/8W	
R101	1-246-854-00	CARBON	7.5K	1/8W	
R102	1-246-854-00	CARBON	7.5K	1/8W	
R103	1-246-854-00	CARBON	7.5K	1/8W	
R104	1-246-854-00	CARBON	7.5K	1/8W	
R105	1-246-854-00	CARBON	7.5K	1/8W	
R106	1-246-854-00	CARBON	7.5K	1/8W	
R114	1-247-049-00	CARBON	470K	1/8W	
R115	1-246-795-00	CARBON	10K	1/8W	
R118	1-246-795-00	CARBON	10K	1/8W	
R119	1-246-807-00	CARBON	100K	1/8W	
R120	1-246-807-00	CARBON	100K	1/8W	
R130	1-246-773-00	CARBON	150	1/8W	
R131	1-246-773-00	CARBON	150	1/8W	
R132	1-246-773-00	CARBON	150	1/8W	
R133	1-246-773-00	CARBON	150	1/8W	
R134	1-246-773-00	CARBON	150	1/8W	
R135	1-246-773-00	CARBON	150	1/8W	
R201	1-246-781-00	CARBON	680	1/8W	
R203	1-246-805-00	CARBON	68K	1/8W	
R204	1-246-795-00	CARBON	10K	1/8W	
R205	1-247-049-00	CARBON	470K	1/8W	
R208	1-246-799-00	CARBON	22K	1/8W	
R209	1-246-795-00	CARBON	10K	1/8W	
R211	1-246-795-00	CARBON	10K	1/8W	
R212	1-246-795-00	CARBON	10K	1/8W	
R213	1-246-795-00	CARBON	10K	1/8W	
R214	1-246-795-00	CARBON	10K	1/8W	
R215	1-246-795-00	CARBON	10K	1/8W	
R216	1-246-795-00	CARBON	10K	1/8W	
R217	1-246-795-00	CARBON	10K	1/8W	
R218	1-246-807-00	CARBON	100K	1/8W	
R219	1-246-795-00	CARBON	10K	1/8W	
R220	1-246-795-00	CARBON	10K	1/8W	
R223	1-246-795-00	CARBON	10K	1/8W	
R224	1-246-795-00	CARBON	10K	1/8W	
R225	1-246-807-00	CARBON	100K	1/8W	
R226	1-246-795-00	CARBON	10K	1/8W	
R227	1-246-789-00	CARBON	3.3K	1/8W	
R228	1-246-780-00	CARBON	560	1/8W	
R229	1-246-795-00	CARBON	10K	1/8W	
R230	1-246-783-00	CARBON	1K	1/8W	
R231	1-246-783-00	CARBON	1K	1/8W	
R232	1-246-807-00	CARBON	100K	1/8W	
R234	1-246-795-00	CARBON	10K	1/8W	
R235	1-246-776-00	CARBON	270	1/8W	

NOTE:

The components identified by shading and mark ⚠ are critical for safety. Replace only with part number specified.

Les composants identifiés par une trame et une marque ⚠ sont critiques pour la sécurité. Ne les remplacer que par une pièce portant le numéro spécifié.

When indicating parts by reference number, please include the board name.

- =>: Due to standardization, interchangeable replacements may be substituted for parts specified in the diagrams.
- Items marked " ♦ " are not stocked since they are seldom required for routine service. Some delay should be anticipated when ordering these items.
- All variable and adjustable resistors have characteristic curve B, unless otherwise noted.

CAPACITORS
- MF : μF, PF : μμF

RESISTORS
- All resistors are in ohms
- F : nonflammable

COILS
- MMH : mH, UH : μH

Ref.No	Part No	Description			Remark
R236	1-246-803-00	CARBON	47K	1/8W	
R240	1-246-787-00	CARBON	2.2K	1/8W	
R301	1-246-783-00	CARBON	1K	1/8W	
R302	1-246-783-00	CARBON	1K	1/8W	
R303	1-246-789-00	CARBON	3.3K	1/8W	
R304	1-246-789-00	CARBON	3.3K	1/8W	
R305	1-246-843-00	CARBON	910	1/8W	
R306	1-246-843-00	CARBON	910	1/8W	
R307	1-246-783-00	CARBON	1K	1/8W	
R308	1-246-783-00	CARBON	1K	1/8W	
R309	1-246-789-00	CARBON	3.3K	1/8W	
R310	1-246-789-00	CARBON	3.3K	1/8W	
R311	1-246-843-00	CARBON	910	1/8W	
R312	1-246-843-00	CARBON	910	1/8W	
R313	1-246-783-00	CARBON	1K	1/8W	
R314	1-246-783-00	CARBON	1K	1/8W	
R315	1-246-783-00	CARBON	1K	1/8W	
R316	1-246-783-00	CARBON	1K	1/8W	
R317	1-246-789-00	CARBON	3.3K	1/8W	
R320	1-246-787-00	CARBON	2.2K	1/8W	
R321	1-246-807-00	CARBON	100K	1/8W	
R322	1-246-807-00	CARBON	100K	1/8W	
R323	1-246-787-00	CARBON	2.2K	1/8W	
R324	1-246-787-00	CARBON	2.2K	1/8W	
R325	1-246-807-00	CARBON	100K	1/8W	
R326	1-246-807-00	CARBON	100K	1/8W	
R327	1-246-787-00	CARBON	2.2K	1/8W	
R328	1-246-793-00	CARBON	6.8K	1/8W	
R329	1-246-791-00	CARBON	4.7K	1/8W	
R330	1-246-791-00	CARBON	4.7K	1/8W	
R331	1-246-791-00	CARBON	4.7K	1/8W	
R332	1-246-797-00	CARBON	15K	1/8W	
R333 ⚠	1-247-587-00	CARBON	0.47 5%	1/4W	
R334	1-246-795-00	CARBON	10K	1/8W	
R335	1-206-640-00	METAL	100 5%	2W	F
R336	1-206-640-00	METAL	100 5%	2W	F
R337	1-246-794-00	CARBON	8.2K	1/8W	

CRYSTAL

X101	1-527-532-31	OSCILLATOR, CERAMIC	
X201	1-527-532-31	OSCILLATOR, CERAMIC	

****

♦:1-605-575-00 TU-22 BOARD
****

****

♦:A-6721-086-A TU-21 BOARD, COMPLETE
****

♦:1-555-716-00	CABLE, PIN	
1-555-798-00	CORD (WITH DC PLUG)	
♦:3-671-841-00	CASE (1) (MAIN), SHIELD, TU	
♦:3-671-842-00	LID, CASE (1), SHIELD, TU	
♦:3-671-843-00	LID, REAR, CASE (1), SHIELD, TU	
♦:3-671-844-00	CASE (2) (MAIN), SHIELD, TU	
♦:3-671-845-00	LID, CASE (2), SHIELD, TU	
♦:3-671-846-00	LID, REAR, CASE (2), SHIELD, TU	
♦:3-671-847-00	CASE (3) (MAIN), SHIELD, TU	
♦:3-671-848-00	LID, CASE (3), SHIELD, TU	
♦:3-671-849-00	LID, REAR, CASE (3), SHIELD, TU	

BATTERY

BT491	1-528-074-00	BATTERY, NICKEL CADMIUM	

CAPACITOR

C064	1-123-330-00	ELECT	22MF	20%	16V
C101	1-102-074-00	CERAMIC	0.001MF	10%	50V
C102	1-123-380-00	ELECT	1MF	20%	50V
C103	1-102-121-00	CERAMIC	0.0022MF	10%	50V
C104	1-102-074-00	CERAMIC	0.001MF	10%	50V
C105	1-102-513-00	CERAMIC	18PF	5%	50V
C106	1-102-074-00	CERAMIC	0.001MF	10%	50V
C107	1-123-330-00	ELECT	22MF	20%	16V
C108	1-123-333-00	ELECT	100MF	20%	16V
C109	1-108-242-00	MYLAR	0.022MF	10%	50V
C110	1-131-404-00	ELECT(SOLID)	0.22MF	10%	25V
C111	1-131-404-00	ELECT(SOLID)	0.22MF	10%	25V
C112	1-102-526-00	CERAMIC	75PF	5%	50V
C113	1-101-004-00	CERAMIC	0.01MF		50V
C114	1-101-884-00	CERAMIC	56PF	5%	50V
C115	1-101-884-00	CERAMIC	56PF	5%	50V
C116	1-102-121-00	CERAMIC	0.0022MF	10%	50V
C117	1-102-953-00	CERAMIC	18PF	5%	50V
C119	1-123-333-00	ELECT	100MF	20%	16V
C120	1-123-330-00	ELECT	22MF	20%	16V
C121	1-108-567-00	MYLAR	0.0033MF	5%	50V
C122	1-123-328-00	ELECT	4.7MF	20%	25V
C123	1-123-330-00	ELECT	22MF	20%	16V
C124	1-102-960-00	CERAMIC	24PF	5%	50V
C125	1-102-971-00	CERAMIC	82PF	5%	50V
C126	1-161-059-00	CERAMIC	0.047MF	10%	50V
C127	1-102-526-00	CERAMIC	75PF	5%	50V
C128	1-123-330-00	ELECT	22MF	20%	16V
C129	1-123-380-00	ELECT	1MF	20%	50V
C130	1-108-583-00	MYLAR	0.015MF	5%	50V
C131	1-123-379-00	ELECT	0.47MF	20%	50V
C132	1-102-074-00	CERAMIC	0.001MF	10%	50V
C151	1-123-839-00	ELECT	1000MF	20%	16V
C152	1-123-330-00	ELECT	22MF	20%	16V
C153	1-123-330-00	ELECT	22MF	20%	16V
C155	1-130-495-00	MYLAR	0.1MF	5%	50V
C156	1-123-330-00	ELECT	22MF	20%	16V
C157	1-123-330-00	ELECT	22MF	20%	16V
C201	1-101-004-00	CERAMIC	0.01MF		50V
C202	1-123-330-00	ELECT	22MF	20%	16V

NOTE:

The components identified by shading and mark ⚠ are critical for safety. Replace only with part number specified.

Les composants identifiés par une trame et une marque ⚠ sont critiques pour la sécurité. Ne les remplacer que par une pièce portant le numéro spécifié.

When indicating parts by reference number, please include the board name.

- =>: Due to standardization, interchangeable replacements may be substituted for parts specified in the diagrams.
- Items marked " ♦ " are not stocked since they are seldom required for routine service. Some delay should be anticipated when ordering these items.

- All variable and adjustable resistors have characteristic curve B, unless otherwise noted.

CAPACITORS
- MF : μF, PF : μμF

RESISTORS
- All resistors are in ohms
- F : nonflammable

COILS
- MMH : mH, UH : μH

TU-21 BOARD

Ref.No	Part No	Description			Remark
C203	1-161-059-00	CERAMIC	0.047MF	10% 50V	
C204	1-123-379-00	ELECT	0.47MF	20% 50V	
C205	1-102-973-00	CERAMIC	100PF	5% 50V	
C206	1-108-555-00	MYLAR	0.001MF	5% 50V	
C207	1-108-555-00	MYLAR	0.001MF	5% 50V	
C208	1-108-559-00	MYLAR	0.0015MF	5% 50V	
C209	1-123-381-00	ELECT	2.2MF	20% 50V	
C210	1-102-973-00	CERAMIC	100PF	5% 50V	
C211	1-102-959-00	CERAMIC	22PF	5% 50V	
C212	1-130-499-51	MYLAR	0.22MF	5% 50V	
C214	1-130-489-51	MYLAR	0.033MF	5% 50V	
C217	1-130-483-51	MYLAR	0.01MF	5% 50V	
C219	1-123-321-00	ELECT	220MF	20% 16V	
C221	1-102-973-00	CERAMIC	100PF	5% 50V	
C421	1-101-004-00	CERAMIC	0.01MF	50V	
C422	1-123-252-00	ELECT	1MF	160V	
C423	1-123-383-00	ELECT	4.7MF	20% 100V	
C424	1-123-369-00	ELECT	4.7MF	20% 50V	
C425	1-106-367-00	MYLAR	0.01MF	5% 200V	
C426	1-123-622-00	ELECT	22MF	20% 16V	
C427	1-161-059-00	CERAMIC	0.047MF	10% 50V	
C428	1-161-059-00	CERAMIC	0.047MF	10% 50V	
C429	1-123-622-00	ELECT	22MF	20% 16V	

FILTER

CF101	1-409-332-00	CERAMIC TRAP (4.5MHZ)
CF102	1-527-260-00	FILTER, CERAMIC (4.5MHZ)
CF103	1-409-332-00	CERAMIC TRAP (4.5MHZ)

CONNECTOR

CN001♦	1-560-469-00	PIN, CONNECTOR 6P
CN002♦	1-560-468-00	PIN, CONNECTOR 5P
CN004♦	1-560-467-00	PIN, CONNECTOR 4P
CN005♦	1-560-470-00	PIN, CONNECTOR 8P
CN006♦	1-560-467-00	PIN, CONNECTOR 4P
CN007♦	1-560-467-00	PIN, CONNECTOR 4P
CN008♦	1-560-467-00	PIN, CONNECTOR 4P
CN009♦	1-560-472-00	PIN, CONNECTOR 12P
CN010♦	1-560-468-00	PIN, CONNECTOR 5P
CN012♦	1-560-470-00	PIN, CONNECTOR 8P
CN013♦	1-560-468-00	PIN, CONNECTOR 5P

COMPOSITION CIRCUIT BLOCK

CP201	1-232-154-00	COMPOSITION CIRCUIT BLOCK
CP501	1-232-160-00	COMPOSITION CIRCUIT BLOCK
CP502	1-232-160-00	COMPOSITION CIRCUIT BLOCK
CP503	1-232-161-00	COMPOSITION CIRCUIT BLOCK

DIODE

D101	8-719-911-19	DIODE 1SS119
D102	8-719-911-19	DIODE 1SS119
D103	8-719-911-19	DIODE 1SS119
D201	8-719-911-19	DIODE 1SS119
D202	8-719-911-19	DIODE 1SS119
D203	8-719-911-19	DIODE 1SS119
D204	8-719-911-19	DIODE 1SS119
D205	8-719-911-19	DIODE 1SS119
D206	8-719-911-19	DIODE 1SS119
D207	8-719-911-19	DIODE 1SS119
D210	8-719-911-19	DIODE 1SS119
D211	8-719-911-19	DIODE 1SS119
D212	8-719-911-19	DIODE 1SS119
D213	8-719-911-19	DIODE 1SS119
D214	8-719-911-19	DIODE 1SS119
D215	8-719-911-19	DIODE 1SS119
D421	=>8-719-305-15	DIODE GH-3F
D422	8-719-305-15	DIODE GH-3F
D423	8-719-305-15	DIODE GH-3F
D424	8-719-124-07	DIODE RD24E-B
D425	8-719-911-19	DIODE 1SS119
D426	8-719-911-19	DIODE 1SS119
D501	8-719-911-19	DIODE 1SS119
D502	8-719-911-19	DIODE 1SS119
D503	8-719-911-19	DIODE 1SS119
D504	8-719-911-19	DIODE 1SS119
D505	8-719-911-19	DIODE 1SS119
D506	8-719-911-19	DIODE 1SS119
D507	8-719-911-19	DIODE 1SS119
D508	8-719-911-19	DIODE 1SS119
D509	8-719-911-19	DIODE 1SS119
D510	8-719-911-19	DIODE 1SS119
D511	8-719-911-19	DIODE 1SS119
D512	8-719-911-19	DIODE 1SS119
D513	8-719-911-19	DIODE 1SS119
D514	8-719-911-19	DIODE 1SS119

IC

IC101	8-758-851-00	IC CX-885A
IC201	=>8-757-605-00	IC CX-760E
IC202	8-757-611-00	IC CX-761A
IC203	8-758-040-00	IC CX-804
IC204	8-759-157-40	IC UPC574J
IC501	8-759-240-71	IC TC4071BP
IC502	8-759-240-71	IC TC4071BP

COIL

L101	1-408-408-00	MICRO INDUCTOR 8.2UH
L102	1-408-411-00	MICRO INDUCTOR 15UH
L103	1-408-399-00	MICRO INDUCTOR 1.5UH
L104	1-408-403-00	MICRO INDUCTOR 3.3UH
L105	1-408-414-00	MICRO INDUCTOR 27UH
L106	1-408-420-00	MICRO INDUCTOR 82UH
L108	1-408-410-00	MICRO INDUCTOR 12UH
L109	1-407-510-00	MICRO INDUCTOR 33MMH
L110	1-408-421-00	MICRO INDUCTOR 100UH
L201	1-408-421-00	MICRO INDUCTOR 100UH

NOTE:

The components identified by shading and mark ⚠ are critical for safety. Replace only with part number specified.

Les composants identifiés par une trame et une marque ⚠ sont critiques pour la sécurité. Ne les remplacer que par une pièce portant le numéro spécifié.

When indicating parts by reference number, please include the board name.

- =>: Due to standardization, interchangeable replacements may be substituted for parts specified in the diagrams.
- Items marked " ♦ " are not stocked since they are seldom required for routine service. Some delay should be anticipated when ordering these items.

- All variable and adjustable resistors have characteristic curve B, unless otherwise noted.

CAPACITORS
- MF : μF, PF : μμF

RESISTORS
- All resistors are in ohms
- F : nonflammable

COILS
- MMH : mH, UH : μH

Ref.No	Part No	Description	Remark
L421	1-408-421-00	MICRO INDUCTOR 100UH	
		CONNECTOR	
PJ101♦	1-526-575-00	SOCKET, PLUG	
PJ102♦	1-526-575-00	SOCKET, PLUG	
		TRANSISTOR	
Q053	8-729-178-54	TRANSISTOR 2SC2785	
Q101	8-729-178-54	TRANSISTOR 2SC2785	
Q103	8-729-178-54	TRANSISTOR 2SC2785	
Q104	8-729-178-54	TRANSISTOR 2SC2785	
Q105	8-729-117-54	TRANSISTOR 2SA1175	
Q106	8-729-117-54	TRANSISTOR 2SA1175	
Q151	8-729-178-54	TRANSISTOR 2SC2785	
Q201	8-729-178-54	TRANSISTOR 2SC2785	
Q202	8-729-178-54	TRANSISTOR 2SC2785	
Q203	8-729-178-54	TRANSISTOR 2SC2785	
Q204	8-729-178-54	TRANSISTOR 2SC2785	
Q205	8-729-178-54	TRANSISTOR 2SC2785	
Q206	8-729-178-54	TRANSISTOR 2SC2785	
Q207	8-729-178-54	TRANSISTOR 2SC2785	
Q208	8-729-139-04	TRANSISTOR 2N3904	
Q209	8-724-375-01	TRANSISTOR 2SC403C	
Q213	8-729-117-54	TRANSISTOR 2SA1175	
Q214	8-729-117-54	TRANSISTOR 2SA1175	
Q215	8-729-117-54	TRANSISTOR 2SA1175	
Q216	8-729-178-54	TRANSISTOR 2SC2785	
Q401	8-729-178-54	TRANSISTOR 2SC2785	
Q402	8-729-117-54	TRANSISTOR 2SA1175	
Q403	8-729-178-54	TRANSISTOR 2SC2785	
Q405	8-729-178-54	TRANSISTOR 2SC2785	
Q406	8-729-117-54	TRANSISTOR 2SA1175	
Q421	8-729-177-43	TRANSISTOR 2SD774	
Q422	8-729-194-12	TRANSISTOR 2SC1941	
Q501	8-729-178-54	TRANSISTOR 2SC2785	
Q502	8-729-117-54	TRANSISTOR 2SA1175	
		RESISTOR	
R060	1-246-789-00	CARBON 3.3K 1/8W	
R061	1-246-783-00	CARBON 1K 1/8W	
R062	1-246-848-00	CARBON 2.4K 1/8W	
R063	1-246-791-00	CARBON 4.7K 1/8W	
R101	1-246-787-00	CARBON 2.2K 1/8W	
R102	1-246-790-00	CARBON 3.9K 1/8W	
R103	1-246-787-00	CARBON 2.2K 1/8W	
R104	1-246-800-00	CARBON 27K 1/8W	
R105	1-246-785-00	CARBON 1.5K 1/8W	
R106	1-246-790-00	CARBON 3.9K 1/8W	
R107	1-246-789-00	CARBON 3.3K 1/8W	
R108	1-246-783-00	CARBON 1K 1/8W	
R109	1-246-804-00	CARBON 56K 1/8W	
R110	1-246-807-00	CARBON 100K 1/8W	
R111	1-246-802-00	CARBON 39K 1/8W	

Ref.No	Part No	Description			Remark
R112	1-246-782-00	CARBON	820	1/8W	
R113	1-247-047-00	CARBON	330K	1/8W	
R114	1-246-777-00	CARBON	330	1/8W	
R115	1-246-850-00	CARBON	3.6K	1/8W	
R116	1-246-850-00	CARBON	3.6K	1/8W	
R119	1-246-778-00	CARBON	390	1/8W	
R121	1-246-776-00	CARBON	270	1/8W	
R122	1-246-807-00	CARBON	100K	1/8W	
R123	1-246-786-00	CARBON	1.8K	1/8W	
R124	1-246-776-00	CARBON	270	1/8W	
R125	1-246-852-00	CARBON	5.1K	1/8W	
R126	1-246-795-00	CARBON	10K	1/8W	
R127	1-246-787-00	CARBON	2.2K	1/8W	
R128	1-246-789-00	CARBON	3.3K	1/8W	
R129⚠	1-247-107-00	CARBON	100 5%	1/4W	F
R130	1-246-783-00	CARBON	1K	1/8W	
R131	1-246-786-00	CARBON	1.8K	1/8W	
R132	1-246-791-00	CARBON	4.7K	1/8W	
R133	1-246-779-00	CARBON	470	1/8W	
R134	1-246-807-00	CARBON	100K	1/8W	
R135	1-246-777-00	CARBON	330	1/8W	
R151	1-246-807-00	CARBON	100K	1/8W	
R153	1-246-799-00	CARBON	22K	1/8W	
R154⚠	1-247-082-00	CARBON	8.2 5%	1/4W	F
R201	1-246-783-00	CARBON	1K	1/8W	
R203	1-246-803-00	CARBON	47K	1/8W	
R204	1-246-796-00	CARBON	12K	1/8W	
R205	1-246-801-00	CARBON	33K	1/8W	
R206	1-246-803-00	CARBON	47K	1/8W	
R207	1-246-806-00	CARBON	82K	1/8W	
R208	1-246-795-00	CARBON	10K	1/8W	
R209	1-246-799-00	CARBON	22K	1/8W	
R210	1-246-795-00	CARBON	10K	1/8W	
R211	1-246-795-00	CARBON	10K	1/8W	
R212	1-246-859-00	CARBON	20K	1/8W	
R213	1-246-795-00	CARBON	10K	1/8W	
R214	1-246-795-00	CARBON	10K	1/8W	
R215	1-246-859-00	CARBON	20K	1/8W	
R216	1-246-795-00	CARBON	10K	1/8W	
R217	1-246-795-00	CARBON	10K	1/8W	
R218	1-246-811-00	CARBON	220K	1/8W	
R219	1-246-795-00	CARBON	10K	1/8W	
R220	1-246-795-00	CARBON	10K	1/8W	
R221	1-244-885-00	CARBON	3.3K 5%	1/2W	
R222	1-246-795-00	CARBON	10K	1/8W	
R223	1-246-801-00	CARBON	33K	1/8W	
R224	1-246-806-00	CARBON	82K	1/8W	
R225	1-246-783-00	CARBON	1K	1/8W	
R226	1-246-807-00	CARBON	100K	1/8W	
R227	1-246-811-00	CARBON	220K	1/8W	
R228	1-244-873-00	CARBON	1K 5%	1/2W	
R229	1-246-795-00	CARBON	10K	1/8W	
R230	1-247-047-00	CARBON	330K	1/8W	

NOTE:

The components identified by shading and mark ⚠ are critical for safety. Replace only with part number specified.

Les composants identifiés par une trame et une marque ⚠ sont critiques pour la sécurité. Ne les remplacer que par une pièce portant le numéro spécifié.

When indicating parts by reference number, please include the board name.

- =>: Due to standardization, interchangeable replacements may be substituted for parts specified in the diagrams.
- Items marked " ♦ " are not stocked since they are seldom required for routine service. Some delay should be anticipated when ordering these items.
- All variable and adjustable resistors have characteristic curve B, unless otherwise noted.

CAPACITORS
- MF : μF, PF : μμF

RESISTORS
- All resistors are in ohms
- F : nonflammable

COILS
- MMH : mH, UH : μH

TU-21 BOARD | SW-12 BOARD

Ref.No	Part No	Description			Remark
R231	1-246-801-00	CARBON	33K	1/8W	
R232	1-246-777-00	CARBON	330	1/8W	
R233	1-246-783-00	CARBON	1K	1/8W	
R234	1-246-799-00	CARBON	22K	1/8W	
R235	1-246-795-00	CARBON	10K	1/8W	
R236	1-246-795-00	CARBON	10K	1/8W	
R237	1-246-807-00	CARBON	100K	1/8W	
R238	1-246-795-00	CARBON	10K	1/8W	
R239	1-246-795-00	CARBON	10K	1/8W	
R241	1-246-798-00	CARBON	18K	1/8W	
R242	1-246-788-00	CARBON	2.7K	1/8W	
R243	1-246-475-00	CARBON	1.2K 5%	1/4W	
R244	1-246-801-00	CARBON	33K	1/8W	
R245	1-202-667-00	COMPOSITION	8.2M 5%	1/2W	
R247	1-246-805-00	CARBON	68K	1/8W	
R249	1-246-521-00	CARBON	100K 5%	1/4W	
R259	1-246-807-00	CARBON	100K	1/8W	
R260	1-246-807-00	CARBON	100K	1/8W	
R261	1-246-799-00	CARBON	22K	1/8W	
R262	1-246-787-00	CARBON	2.2K	1/8W	
R263	1-246-799-00	CARBON	22K	1/8W	
R264	1-246-787-00	CARBON	2.2K	1/8W	
R265	1-246-799-00	CARBON	22K	1/8W	
R267	1-246-807-00	CARBON	100K	1/8W	
R269	1-246-787-00	CARBON	2.2K	1/8W	
R275	1-246-795-00	CARBON	10K	1/8W	
R276	1-246-789-00	CARBON	3.3K	1/8W	
R277	1-246-794-00	CARBON	8.2K 5%	1/8W	
R277	1-247-053-00	CARBON	1M	1/8W	
R278	1-246-805-00	CARBON	68K	1/8W	
R401	1-246-852-00	CARBON	5.1K	1/8W	
R402	1-246-795-00	CARBON	10K	1/8W	
R407	1-246-795-00	CARBON	10K	1/8W	
R408	1-246-795-00	CARBON	10K	1/8W	
R421	1-246-783-00	CARBON	1K	1/8W	
R422	1-246-775-00	CARBON	220	1/8W	
R423	1-244-909-00	CARBON	33K 5%	1/2W	
R424	1-244-905-00	CARBON	22K 5%	1/2W	
R425	1-246-795-00	CARBON	10K	1/8W	
R426	1-246-795-00	CARBON	10K	1/8W	
R427	1-246-787-00	CARBON	2.2K	1/8W	
R428	1-246-801-00	CARBON	33K	1/8W	
R429	1-247-047-00	CARBON	330K 5%	1/8W	
R491⚠	1-212-850-00	FUSIBLE	5.1 5%	1/4W	F
R501	1-246-803-00	CARBON	47K	1/8W	
R502	1-246-803-00	CARBON	47K	1/8W	
R503	1-246-795-00	CARBON	10K	1/8W	
R504	1-246-801-00	CARBON	33K	1/8W	
R505	1-246-803-00	CARBON	47K	1/8W	
R506	1-246-803-00	CARBON	47K	1/8W	
R507	1-246-788-00	CARBON	2.7K	1/8W	

Ref.No	Part No	Description	Remark
		RF UNIT	
RF101	1-464-151-00	UNIT, COLOR RF (RF-7W(M))	
		VARIABLE RESISTOR	
RV101	1-224-251-XX	RES, ADJ, METAL GLAZE 4.7K	
RV102	1-224-251-XX	RES, ADJ, METAL GLAZE 4.7K	
		FILTER	
SF101	1-404-227-41	SAWF	
		TRANSFORMER	
T101	1-404-153-00	VIFT	
T102	1-404-321-00	VIFT	
T103	1-404-352-00	COIL, VIF	
T104	1-404-318-00	SIFT	
T105	I-404-352-00	COIL, VIF	
T201	1-409-193-00	COIL 3.58MHZ TRAP	
T421	1-421-436-00	TRANSFORMER, FERRITE	
		THERMISTOR	
TH101	1-800-626-00	THERMISTOR	
		TUNER	
TU101	1-463-377-00	TUNER (BT-864)	
**********			
♦	1-605-410-00	SW-12 BOARD **********	
	3-701-822-00	HOLDER, WIRE	
		DIODE	
D501	8-719-911-06	DIODE 1SS106	
D502	8-719-911-06	DIODE 1SS106	
D503	8-719-911-06	DIODE 1SS106	
D504	8-719-168-07	DIODE RD6.8E-B	
D505	8-719-168-07	DIODE RD6.8E-B	
		VARIABLE RESISTOR	
RV501	1-228-244-00	RES, VAR, SOLID 100K	
RV502	1-228-359-00	RES, VAR, SOLID 5K	
		SWITCH	
S501	1-553-766-00	SWITCH, KEY BOARD	
S502	1-553-766-00	SWITCH, KEY BOARD	
S503	1-553-716-00	SWITCH, SLIDE	
S504	1-553-754-00	SWITCH, SLIDE	

NOTE:

The components identified by shading and mark ⚠ are critical for safety. Replace only with part number specified.

Les composants identifiés par une trame et une marque ⚠ sont critiques pour la sécurité. Ne les remplacer que par une pièce portant le numéro spécifié.

When indicating parts by reference number, please include the board name.

- =>: Due to standardization, interchangeable replacements may be substituted for parts specified in the diagrams.
- Items marked " ♦ " are not stocked since they are seldom required for routine service. Some delay should be anticipated when ordering these items.
- All variable and adjustable resistors have characteristic curve B, unless otherwise noted.

CAPACITORS
- MF : μF, PF : μμF

RESISTORS
- All resistors are in ohms
- F : nonflammable

COILS
- MMH : mH, UH : μH

CH-22 BOARD | **CH-21 BOARD** | **CI-3 BOARD**

CI-2 BOARD | **RL-4 BOARD** | **LM-9 BOARD** | **LM-8 BOARD**

Ref.No	Part No	Description			Remark
	A-6728-243-A	LM-8 BOARD, COMPLETE			
		**********			
		CAPACITOR			
C101	1-161-057-00	CERAMIC	0.033MF	10% 50V	
C102	1-161-057-00	CERAMIC	0.033MF	10% 50V	
		COIL			
L101	1-408-120-00	MICRO INDUCTOR 18UH			
L102	1-408-120-00	MICRO INDUCTOR 18UH			
**********					
	1-605-109-00	LM-9 BOARD			
		**********			
		CAPACITOR			
C001	1-161-057-00	CERAMIC	0.033MF	10% 50V	
C002	1-161-057-00	CERAMIC	0.033MF	10% 50V	
		DIODE			
D001	8-719-911-06	DIODE 1SS106			
D002	8-719-911-06	DIODE 1SS106			
D003	8-719-911-06	DIODE 1SS106			
		COIL			
L001	1-407-696-00	MICRO INDUCTOR 18UH			
L002	1-407-696-00	MICRO INDUCTOR 18UH			
		SWITCH			
S001	1-552-664-00	SWITCH, MICRO			
**********					
♦	1-605-110-00	RL-4 BOARD			
		**********			
**********					
	A-6728-248-A	CI-2 BOARD, COMPLETE			
		**********			
	1-553-719-00	SWITCH, MICRO			
♦	3-670-039-00	HOLDER (R), CSW			
**********					
	A-6728-249-A	CI-3 BOARD, COMPLETE			
		**********			
	1-553-719-00	SWITCH, MICRO			
♦	3-670-038-00	HOLDER (L), CSW			

Ref.No	Part No	Description			Remark
	1-605-581-00	CH-21 BOARD			
		**********			
♦	3-662-227-00	HOLDER (R-3), LED			
		CAPACITOR			
C701	1-161-021-00	CERAMIC	0.047MF	10% 25V	
		DIODE			
D751	8-719-812-31	DIODE TLR123			
D752	8-719-812-32	DIODE TLY123			
D753	8-719-812-33	DIODE TLG123			
D754	8-719-911-19	DIODE 1SS119			
D755	8-719-812-31	DIODE TLR123			
D756	8-719-812-31	DIODE TLR123			
D757	8-719-812-31	DIODE TLR123			
D758	8-719-812-31	DIODE TLR123			
D759	8-719-812-31	DIODE TLR123			
		IC			
IC701	8-759-619-03	IC M51903L			
		RESISTOR			
R752	1-246-782-00	CARBON	820	1/8W	
R753	1-246-783-00	CARBON	1K	1/8W	
R754	1-246-795-00	CARBON	10K	1/8W	
R755	1-246-787-00	CARBON	2.2K	1/8W	
R756	1-246-787-00	CARBON	2.2K	1/8W	
R757	1-246-787-00	CARBON	2.2K	1/8W	
R758	1-246-787-00	CARBON	2.2K	1/8W	
R759	1-246-787-00	CARBON	2.2K	1/8W	
		SWITCH			
S751	1-553-766-00	SWITCH, KEY BOARD			
S752	1-553-766-00	SWITCH, KEY BOARD			
S753	1-553-766-00	SWITCH, KEY BOARD			
S754	1-553-716-00	SWITCH, SLIDE			
S755	1-553-716-00	SWITCH, SLIDE			
**********					
	1-605-895-00	CH-22 BOARD			
		**********			
		NEON LAMP			
NL701	1-519-204-00	LAMP, NEON			
NL702	1-519-204-00	LAMP, NEON			
NL703	1-519-204-00	LAMP, NEON			
NL704	1-519-204-00	LAMP, NEON			
NL705	1-519-204-00	LAMP, NEON			
NL706	1-519-204-00	LAMP, NEON			
NL707	1-519-204-00	LAMP, NEON			
NL708	1-519-204-00	LAMP, NEON			
NL709	1-519-204-00	LAMP, NEON			

NOTE:

The components identified by shading and mark ⚠ are critical for safety. Replace only with part number specified.

Les composants identifiés par une trame et une marque ⚠ sont critiques pour la sécurité. Ne les remplacer que par une pièce portant le numéro spécifié.

When indicating parts by reference number, please include the board name.

- =>: Due to standardization, interchangeable replacements may be substituted for parts specified in the diagrams.
- Items marked " ♦ " are not stocked since they are seldom required for routine service. Some delay should be anticipated when ordering these items.

- All variable and adjustable resistors have characteristic curve B, unless otherwise noted.

CAPACITORS
- MF : μF, PF : μμF

RESISTORS
- All resistors are in ohms
- F : nonflammable

COILS
- MMH : mH, UH : μH

CH-22 BOARD | RL-7 BOARD | N BOARD | TIMER BLOCK

Ref.No	Part No	Description	Remark
NL710	1-519-204-00	LAMP, NEON	
NL711	1-519-204-00	LAMP, NEON	
NL712	1-519-204-00	LAMP, NEON	
NL713	1-519-204-00	LAMP, NEON	
NL714	1-519-204-00	LAMP, NEON	
		SWITCH	
S701	1-553-766-00	SWITCH, KEY BOARD	
S702	1-553-766-00	SWITCH, KEY BOARD	
S703	1-553-766-00	SWITCH, KEY BOARD	
S704	1-553-766-00	SWITCH, KEY BOARD	
S705	1-553-766-00	SWITCH, KEY BOARD	
S706	1-553-766-00	SWITCH, KEY BOARD	
S707	1-553-766-00	SWITCH, KEY BOARD	
S708	1-553-766-00	SWITCH, KEY BOARD	
S709	1-553-766-00	SWITCH, KEY BOARD	
S710	1-553-766-00	SWITCH, KEY BOARD	
S711	1-553-766-00	SWITCH, KEY BOARD	
S712	1-553-766-00	SWITCH, KEY BOARD	
S713	1-553-766-00	SWITCH, KEY BOARD	
S714	1-553-766-00	SWITCH, KEY BOARD	
**********			
♦	1-606-001-00	RL-7 BOARD **********	
♦	3-670-167-00	INSULATOR	
		CONNECTOR	
CN001♦	1-560-472-00	PIN, CONNECTOR 12P	
CN002♦	1-560-470-00	PIN, CONNECTOR 8P	
		DIODE	
D201	8-719-911-06	DIODE 1SS106	
D202	8-719-911-06	DIODE 1SS106	
D203	8-719-911-06	DIODE 1SS106	
**********			
	1-603-976-00	N BOARD *******	
	1-232-004-00	COMPOSITION CIRCUIT BLOCK	
♦	4-348-551-00	PLATE, SHIELD	
		CAPACITOR	
C001	1-123-617-00	ELECT 10MF 20% 16V	
C002	1-123-617-00	ELECT 10MF 20% 16V	
C003	1-123-617-00	ELECT 10MF 20% 16V	
C004	1-161-019-00	CERAMIC 0.033MF 10% 25V	
C005	1-108-567-00	MYLAR 0.0033MF 5% 50V	
		DIODE	
D001	=>8-719-110-32	DIODE PH302B	

Ref.No	Part No	Description	Remark
		IC	
IC001	8-759-113-73	IC UPC1373H	
		COIL	
L001	1-404-310-00	COIL	
**********			
	1-548-552-00	TIMER BLOCK **********	
	9-982-255-00	FLOURECENT DISPLAY	
		CAPACITOR	
C1	1-123-333-00	ELECT 100MF 20% 25V	
C2	1-101-006-00	CERAMIC 0.047MF Z% 50V	
C3	1-102-074-00	CERAMIC 0.001MF 10% 50V	
C4	1-123-359-00	ELECT 47MF 20% 50V	
C5	1-102-074-00	CERAMIC 0.001MF 10% 50V	
C6	1-123-306-00	ELECT 47MF 20% 10V	
C7	1-123-381-00	ELECT 2.2MF 20% 100V	
C8	1-102-121-00	CERAMIC 0.0022MF 10% 50V	
C9	1-123-306-00	ELECT 47MF 20% 10V	
C10	1-123-382-00	ELECT 3.3MF 20% 100V	
C11	1-102-508-00	CERAMIC 10PF 5% 50V	
C12	9-982-056-00	TRIMMER 4PF TO 28PF	
C13	1-123-382-00	ELECT 3.3MF 20% 50V	
C15	1-102-129-00	CERAMIC 0.01MF 10% 50V	
C16	1-102-038-00	CERAMIC 0.001MF 500V	
C17	1-101-006-00	CERAMIC 0.047MF Z% 50V	
C18	1-102-038-00	CERAMIC 0.001MF 500V	
		COMPOSITION CIRCUIT BLOCK	
CP1	9-982-069-00	COMPOSITION CIRCUIT BLOCK 220Kx4	
		DIODE	
D1	8-719-911-19	DIODE 1SS119	
D2	8-719-100-29	DIODE RD5.1EB1	
D3	8-719-106-07	DIODE RD36E-B	
D4	8-719-911-19	DIODE 1SS119	
D5	8-719-100-29	DIODE RD5.1EB1	
D6	8-719-911-19	DIODE 1SS119	
D7	8-719-911-19	DIODE 1SS119	
D8	8-719-100-31	DIODE RD5.1EB3	
D9	8-719-911-19	DIODE 1SS119	
D10	8-719-100-22	DIODE RD4.3EB1	
D11	9-982-258-00	DIODE TLS-123	
D12	8-719-911-19	DIODE 1SS119	
D13	8-719-911-19	DIODE 1SS119	
D15	8-719-911-19	DIODE 1SS119	
D16	8-719-911-19	DIODE 1SS119	
D17	8-719-911-19	DIODE 1SS119	

NOTE:

The components identified by shading and mark ⚠ are critical for safety. Replace only with part number specified.

Les composants identifiés par une trame et une marque ⚠ sont critiques pour la sécurité. Ne les remplacer que par une pièce portant le numéro spécifié.

When indicating parts by reference number, please include the board name.

- =>: Due to standardization, interchangeable replacements may be substituted for parts specified in the diagrams.
- Items marked " ♦ " are not stocked since they are seldom required for routine service. Some delay should be anticipated when ordering these items.

- All variable and adjustable resistors have characteristic curve B, unless otherwise noted.

CAPACITORS
- MF : μF, PF : μμF

RESISTORS
- All resistors are in ohms
- F : nonflammable

COILS
- MMH : mH, UH : μH

Ref.No	Part No	Description				Remark
D18	8-719-911-19	DIODE 1SS119				
D19	8-719-911-19	DIODE 1SS119				
D20	8-719-911-19	DIODE 1SS119				
D21	8-719-911-19	DIODE 1SS119				
D22	8-719-911-19	DIODE 1SS119				
D23	8-719-911-19	DIODE 1SS119				
		IC				
IC1	9-982-051-00	IC MSL915RS				
IC2	9-982-051-00	IC MSL915RS				
IC3	9-982-051-00	IC MSL915RS				
IC4	9-982-071-00	IC MB8845-495M				
		COIL				
L1	9-982-059-00	MICRO INDUCTOR 100UH				
		TRANSISTOR				
Q1	8-764-803-00	TRANSISTOR 2SC1816-3				
Q2	8-763-314-00	TRANSISTOR 2SC1760-14				
Q3	8-763-314-00	TRANSISTOR 2SC1760-14				
Q4	8-729-853-63	TRANSISTOR 2SC536SP				
Q5	8-729-853-63	TRANSISTOR 2SC536SP				
Q6	8-729-853-63	TRANSISTOR 2SC536SP				
Q7	8-729-853-63	TRANSISTOR 2SC536SP				
Q8	8-729-853-63	TRANSISTOR 2SC536SP				
Q9	8-729-853-63	TRANSISTOR 2SC536SP				
		RESISTOR				
R1	1-246-485-00	CARBON	3.3K	5%	1/4W	
R2	1-246-449-00	CARBON	100	5%	1/4W	
R3	1-246-489-00	CARBON	4.7K	5%	1/4W	
R4	1-246-469-00	CARBON	680	5%	1/4W	
R5	1-246-473-00	CARBON	1K	5%	1/4W	
R6	1-246-453-00	CARBON	150	5%	1/4W	
R7	1-246-433-00	CARBON	22	5%	1/4W	
R8	1-246-473-00	CARBON	1K	5%	1/4W	
R9	1-246-513-00	CARBON	47K	5%	1/4W	
R10	1-246-513-00	CARBON	47K	5%	1/4W	
R11	1-246-459-00	CARBON	270	5%	1/4W	
R12	1-246-465-00	CARBON	470	5%	1/4W	
R13	1-246-521-00	CARBON	100K	5%	1/4W	
R14	1-246-521-00	CARBON	100K	5%	1/4W	
R15	1-246-482-00	CARBON	2.4K	5%	1/4W	
R16	9-982-057-00	SOLID	10M	5%	1/4W	
R17	1-246-513-00	CARBON	47K	5%	1/4W	
R18	1-246-481-00	CARBON	2.2K	5%	1/4W	
R19	1-246-451-00	CARBON	120	5%	1/4W	
R20	1-246-513-00	CARBON	47K	5%	1/4W	
R21	1-246-513-00	CARBON	47K	5%	1/4W	
R22	1-246-485-00	CARBON	3.3K	5%	1/4W	
R23	1-246-485-00	CARBON	3.3K	5%	1/4W	
R24	1-212-849-00	FUSIBLE	4.7	5%	1/4W	F

Ref.No	Part No	Description	Remark
		SWITCH	
S1	1-553-766-00	SWITCH, KEY BOARD	
S2	1-553-766-00	SWITCH, KEY BOARD	
S3	1-553-766-00	SWITCH, KEY BOARD	
S4	1-553-766-00	SWITCH, KEY BOARD	
S5	1-553-766-00	SWITCH, KEY BOARD	
S6	1-553-766-00	SWITCH, KEY BOARD	
S7	1-553-716-00	SWITCH, SLIDE	
S8	1-553-716-00	SWITCH, SLIDE	
		TRANSFORMER	
T1	9-982-073-00	TRANSFORMER, CONVERTER	
T2	9-982-074-00	TRANSFORMER, CONVERTER	

****

⚠ 1-413-081-11 POWER BLOCK (SR-11A) **(Type 1)**

****

⚠	1-551-964-00	CORD, POWER				
⚠	1-561-347-00	SOCKET, AC				
		CAPACITOR				
C1	⚠ 1-130-680-00	POLYPRO	0.1MF	20%	125V	
C2	⚠ 1-130-680-00	POLYPRO	0.1MF	20%	125V	
C3	⚠ 1-161-747-00	CERAMIC	0.0022MF	20%	125V	
C4	⚠ 1-161-747-00	CERAMIC	0.0022MF	20%	125V	
C5	⚠ 1-161-747-00	CERAMIC	0.0022MF	20%	125V	
C6	⚠ 1-123-665-00	ELECT	330MF	20%	200V	
C7	⚠ 1-123-580-00	ELECT	4.7MF	20%	350V	
C8	⚠ 1-123-580-00	ELECT	4.7MF	20%	350V	
C9	⚠ 1-123-336-00	ELECT	470MF	20%	25V	
C10	⚠ 1-106-188-00	MYLAR	0.0047MF	5%	100V	
C11	⚠ 1-106-180-00	MYLAR	0.0022MF	5%	100V	
C12	⚠ 1-106-180-00	MYLAR	0.0022MF	5%	100V	
C13	⚠ 9-982-264-00	POLYPRO	0.0047MF	5%	100V	
C14	⚠ 1-106-188-00	MYLAR	0.0047MF	5%	100V	
C15	⚠ 1-106-188-00	MYLAR	0.0047MF	5%	100V	
C16	⚠ 1-108-595-00	MYLAR	0.047MF	5%	50V	
C17	⚠ 9-982-187-00	ELECT	2200MF	20%	16V	
C18	⚠ 1-123-335-00	ELECT	330MF	20%	25V	
C20	⚠ 1-123-323-00	ELECT	470MF	20%	16V	
C21	⚠ 1-108-595-00	MYLAR	0.047MF	5%	50V	
C22	⚠ 9-982-188-00	ELECT	100MF	20%	16V	
C23	⚠ 1-108-587-00	MYLAR	0.022MF	5%	50V	
C24	⚠ 1-123-323-00	ELECT	470MF	20%	16V	
C25	⚠ 1-123-333-00	ELECT	100MF	20%	25V	
C26	⚠ 1-123-356-00	ELECT	10MF	20%	50V	
C27	⚠ 1-123-332-00	ELECT	47MF	20%	25V	
C28	⚠ 1-123-318-00	ELECT	33MF	20%	16V	
C29	⚠ 1-161-747-00	CERAMIC	0.0022MF	20%	125V	
C30	⚠ 1-108-579-00	MYLAR	0.01MF	5%	50V	
C31	⚠ 1-123-380-00	ELECT	1MF	20%	100V	

NOTE:

The components identified by shading and mark ⚠ are critical for safety. Replace only with part number specified.

Les composants identifiés par une trame et une marque ⚠ sont critiques pour la sécurité. Ne les remplacer que par une pièce portant le numéro spécifié.

When indicating parts by reference number, please include the board name.

- =>: Due to standardization, interchangeable replacements may be substituted for parts specified in the diagrams.
- Items marked " ♦ " are not stocked since they are seldom required for routine service. Some delay should be anticipated when ordering these items.

- All variable and adjustable resistors have characteristic curve B, unless otherwise noted.

CAPACITORS
- MF : μF, PF : μμF

RESISTORS
- All resistors are in ohms
- F : nonflammable

COILS
- MMH : mH, UH : μH

POWER BLOCK

Ref.No	Part No	Description				Remark
C32	⚠ .9-982-191-00	ELECT	22MF	20%	50V	
C33	⚠ .1-123-380-00	ELECT	1MF	20%	100V	
C34	⚠ .1-102-114-00	CERAMIC	470PF	10%	50V	
C35	⚠ .1-106-180-00	MYLAR	0.0022MF	5%	100V	
C36	⚠ .1-106-180-00	MYLAR	0.0022MF	5%	100V	
C37	⚠ .1-161-747-00	CERAMIC	0.0022MF	20%	125V	
		CONNECTER				
CN1	1-560-676-00	PIN, CONNECTOR 3P				
		DIODE				
D1	⚠ .8-719-503-40	DIODE S3V40				
D2	⚠ .8-719-503-40	DIODE S3V40				
D3	⚠ .8-719-503-40	DIODE S3V40				
D4	⚠ .8-719-503-40	DIODE S3V40				
D5	⚠ .8-719-500-01	DIODE S1WB10				
D6	⚠ .8-719-550-02	DIODE S5KC20				
D7	⚠ .8-719-923-48	DIODE 1S2348H				
D8	⚠ .8-719-981-01	DIODE ERA81-004				
D9	⚠ .8-719-100-72	DIODE RD15EB3				
D10	⚠ .8-719-815-85	DIODE 1S1585				
D11	⚠ .8-719-981-01	DIODE ERA81-004				
D12	⚠ .8-719-815-85	DIODE 1S1585				
D13	⚠ .8-719-815-85	DIODE 1S1585				
		FUSE				
F1	⚠ .1-532-403-XX	FUSE, 3.15A 125V				
		IC				
IC1	⚠ .8-759-937-59	IC MB3759				
IC2	⚠ .8-759-133-90	IC UPC339C				
IC3	⚠ .8-759-170-08	IC UPC78M08H				
		TRANSISTOR				
Q1	⚠ .8-729-925-02	TRANSISTOR 2SC2502				
Q2	⚠ .8-729-925-02	TRANSISTOR 2SC2502				
Q3	⚠ .8-729-663-47	TRANSISTOR 2SC1364-7				
Q4	⚠ .8-729-177-23	TRANSISTOR 2SB772-P				
Q5	⚠ .8-729-177-23	TRANSISTOR 2SB772-P				
		RESISTOR				
R1	⚠ .9-982-261-00	WIREWOUND	1	10%	5W	F
R2	⚠ .1-244-929-00	CARBON	220K	5%	1/2W	
R3	⚠ .1-202-727-00	SOLID	4.7M	10%	1/2W	
R4	⚠ .1-246-441-00	CARBON	47	5%	1/4W	
R5	⚠ .1-246-441-00	CARBON	47	5%	1/4W	
R6	⚠ .1-246-483-00	CARBON	2.7K	5%	1/4W	
R7	⚠ .1-244-841-00	CARBON	47	5%	1/2W	
R8	⚠ .1-244-835-00	CARBON	27	5%	1/2W	
R9	⚠ .1-217-596-00	METAL PLATE	0.05	10%	2W	
R10	⚠ .1-246-491-00	CARBON	5.6K	5%	1/4W	
R11	⚠ .1-246-529-00	CARBON	220K	5%	1/4W	

Ref.No	Part No	Description				Remark
R12	⚠ .1-246-535-00	CARBON	390K	5%	1/4W	
R13	⚠ .1-246-491-00	CARBON	5.6K	5%	1/4W	
R14	⚠ .1-246-511-00	CARBON	39K	5%	1/4W	
R15	⚠ .1-246-493-00	CARBON	6.8K	5%	1/4W	
R16	⚠ .1-246-483-00	CARBON	2.7K	5%	1/4W	
R17	⚠ .1-246-489-00	CARBON	4.7K	5%	1/4W	
R18	⚠ .1-246-487-00	CARBON	3.9K	5%	1/4W	
R19	⚠ .1-246-481-00	CARBON	2.2K	5%	1/4W	
R20	⚠ .1-246-491-00	CARBON	5.6K	5%	1/4W	
R21	⚠ .1-246-521-00	CARBON	100K	5%	1/4W	
R22	⚠ .1-246-497-00	CARBON	10K	5%	1/4W	
R24	⚠ .1-246-473-00	CARBON	1K	5%	1/4W	
R25	⚠ .1-246-489-00	CARBON	4.7K	5%	1/4W	
R26	⚠ .1-246-491-00	CARBON	5.6K	5%	1/4W	
R27	⚠ .1-244-853-00	CARBON	150	5%	1/2W	
R28	⚠ .1-246-501-00	CARBON	15K	5%	1/4W	
R29	⚠ .1-246-497-00	CARBON	10K	5%	1/4W	
R30	⚠ .1-246-469-00	CARBON	680	5%	1/4W	
R31	⚠ .1-246-481-00	CARBON	2.2K	5%	1/4W	
R32	⚠ .1-246-477-00	CARBON	1.5K	5%	1/4W	
R33	⚠ .1-246-401-00	CARBON	1	5%	1/4W	
R34	⚠ .1-246-401-00	CARBON	1	5%	1/4W	
R35	⚠ .1-246-497-00	CARBON	10K	5%	1/4W	
R36	⚠ .1-246-497-00	CARBON	10K	5%	1/4W	
R37	⚠ .1-246-481-00	CARBON	2.2K	5%	1/4W	
R38	⚠ .1-246-473-00	CARBON	1K	5%	1/4W	
R39	⚠ .1-246-497-00	CARBON	10K	5%	1/4W	
R40	⚠ .9-982-262-00	FUSIBLE	3.3	5%	1/2W	F
R41	⚠ .9-982-185-00	METAL PLATE	1	10%	2W	
R42	⚠ .9-982-263-00	FUSIBLE	2.2	5%	1/4W	F
R43	⚠ .1-246-497-00	CARBON	10K	5%	1/4W	
R44	⚠ .1-244-835-00	CARBON	27	5%	1/2W	
R45	⚠ .1-244-849-00	CARBON	100	5%	1/2W	
		VARIABLE RESISTOR				
RV1	⚠ .1-226-707-00	SOLID 1K				
RV2	⚠ .1-226-707-00	SOLID 1K				
RV3	⚠ .1-226-770-00	METAL GLAZE 470				
		RELAY				
RL1	⚠ .9-982-184-00	RELAY MR31-12U				
		TRANSFOMER				
T1	⚠ .1-421-439-00	CHOKE COIL, NORMAL				
T2	⚠ .1-421-439-00	CHOKE COIL, NORMAL				
T3	⚠ .1-421-438-00	CHOKE COIL, COMMON				
T4	⚠ .1-413-073-00	TRANSFORMER, SWITCHING				
T5	⚠ .1-437-097-00	TRANSFORMER, DRIVE				
T6	⚠ .1-447-197-00	TRANSFORMER, AC				
T7	⚠ .9-982-193-00	CHOKE COIL (C)				
T8	⚠ .9-982-194-00	CHOKE CIOL, POWER				
T9	⚠ .9-982-195-00	CHOKE COIL (A)				
T10	⚠ .9-982-196-00	CHOKE COIL (B)				

NOTE:

The components identified by shading and mark ⚠ are critical for safety. Replace only with part number specified.

Les composants identifiés par une trame et une marque ⚠ sont critiques pour la sécurité. Ne les remplacer que par une pièce portant le numéro spécifié.

When indicating parts by reference number, please include the board name.

- =>: Due to standardization, interchangeable replacements may be substituted for parts specified in the diagrams.
- Items marked " ♦ " are not stocked since they are seldom required for routine service. Some delay should be anticipated when ordering these items.
- All variable and adjustable resistors have characteristic curve B, unless otherwise noted.

CAPACITORS
- MF : μF, PF : μμF

RESISTORS
- All resistors are in ohms
- F : nonflammable

COILS
- MMH : mH, UH : μH

Ref.No.	Part No.	Description	Remark
T11	⚠.9-982-196-00	CHOKE COIL (B)	
T12	⚠.9-982-194-00	CHOKE COIL, POWER	

****

⚠.1-413-116-11 POWER BLOCK (SR-11PH) **(Type 2)**
⚠.1-555-312-21 CORD, POWER

CAPACITOR

C1	⚠.1-123-352-11	ELECT	1MF	20%	50V
C2	⚠.1-130-939-11	FILM	0.22MF	20%	300V
C3	⚠.1-161-742-11	CERAMIC	0.0022MF	20%	400V
C4	⚠.1-161-742-11	CERAMIC	0.0022MF	20%	400V
C5	⚠.1-161-742-11	CERAMIC	0.0022MF	20%	400V
C6	⚠.1-161-742-11	CERAMIC	0.0022MF	20%	400V
C7	⚠.1-125-314-11	ELECT	200MF	20%	400V
C8	⚠.1-124-167-11	ELECT	4.7MF	20%	250V
C9	⚠.1-124-167-11	ELECT	4.7MF	20%	250V
C10	⚠.1-123-362-11	ELECT	330MF	20%	50V
C11	⚠.1-108-234-51	FILM	0.0047MF	10%	50V
C12	⚠.1-123-332-11	ELECT	47MF	20%	25V
C13	⚠.1-108-800-61	FILM	0.0047MF	5%	100V
C14	⚠.1-106-369-51	FILM	0.0022MF	5%	100V
C15	⚠.1-106-369-51	FILM	0.0022MF	5%	100V
C16	⚠.1-106-369-51	FILM	0.0022MF	5%	100V
C17	⚠.1-108-251-51	FILM	0.1MF	10%	50V
C18	⚠.1-123-325-11	ELECT	2200MF	20%	16V
C19	⚠.1-123-323-11	ELECT	470MF	20%	16V
C20	⚠.1-108-234-51	FILM	0.0047MF	10%	50V
C21	⚠.1-108-800-51	FILM	0.0047MF	5%	100V
C22	⚠.1-108-234-51	FILM	0.0047MF	10%	50V
C23	⚠.1-108-246-51	FILM	0.047MF	10%	50V
C24	⚠.1-123-323-11	ELECT	470MF	20%	16V
C25	⚠.1-123-323-11	ELECT	470MF	20%	16V
C26	⚠.1-123-332-11	ELECT	47MF	20%	25V
C27	⚠.1-123-316-11	ELECT	10MF	20%	16V
C28	⚠.1-123-320-11	ELECT	100MF	20%	16V
C29	⚠.1-123-354-11	ELECT	3.3MF	20%	50V
C30	⚠.1-106-377-51	FILM	0.01MF	5%	50V
C31	⚠.1-123-356-11	ELECT	10MF	20%	50V
C32	⚠.1-161-742-11	CERAMIC	0.0022MF	20%	400V
C33	⚠.1-123-335-11	ELECT	330MF	20%	25V

CONNECTOR

CN1	1-560-676-11	PIN, CONNECTOR 3P	

DIODE

D1	⚠.8-719-504-40	DIODE	S4VB40
D2	⚠.8-719-511-10	DIODE	S1WB10
D3	⚠.8-719-550-02	DIODE	S5KC20
D4	⚠.8-719-104-01	DIODE	F114E
D5	⚠.8-719-104-01	DIODE	F114E
D6	⚠.8-719-920-01	DIODE	ERB12-01
D7	⚠.8-719-981-01	DIODE	ERA81-004
D8	⚠.8-719-923-48	DIODE	1S2348H
D9	⚠.8-719-100-72	DIODE	RD15E-B3
D10	⚠.8-719-925-76	DIODE	1S2076
D11	⚠.8-719-923-48	DIODE	1S2348
D12	⚠.8-719-100-56	DIODE	RD10E-B1

FUSE

F1	⚠.1-532-237-11	FUSE	3.15A	125V

IC

IC1	⚠.8-759-937-59	IC	MB3759
IC2	⚠.8-759-375-08	IC	HA178M08P

TRANSISTOR

Q1	⚠.8-729-925-02	TRANSISTOR	2SC2502
Q2	⚠.8-729-925-02	TRANSISTOR	2SC2502
Q3	⚠.8-729-173-47	TRANSISTOR	2SA733
Q4	⚠.8-729-194-57	TRANSISTOR	2SC945
Q5	⚠.8-729-188-23	TRANSISTOR	2SD882
Q6	⚠.8-729-194-57	TRANSISTOR	2SC945
Q7	⚠.8-729-194-57	TRANSISTOR	2SC945
Q8	⚠.8-729-157-13	TRANSISTOR	2SD571

RESISTOR

R1	⚠.1-202-727-11	SOLID	4.7M	10%	1/2W
R2	⚠.1-217-616-11	WIREWOUND	3.3	5%	5W
R3	⚠.1-246-489-46	CARBON	4.7k	5%	1/6W
R4	⚠.1-246-493-15	CARBON	6.8k	5%	1/4W
R5	⚠.1-246-429-15	CARBON	15	5%	1/4W
R6	⚠.1-246-429-15	CARBON	15	5%	1/4W
R7	⚠.1-246-483-15	CARBON	2.7k	5%	1/4W
R8	⚠.1-244-841-11	CARBON	47	5%	1/2W
R9	⚠.1-246-493-46	CARBON	6.8k	5%	1/6W
R10	⚠.1-246-489-46	CARBON	4.7k	5%	1/6W
R11	⚠.1-246-483-46	CARBON	2.7k	5%	1/6W
R12	⚠.1-246-529-46	CARBON	220k	5%	1/6W
R13	⚠.1-246-491-15	CARBON	5.6k	5%	1/4W
R14	⚠.1-246-529-15	CARBON	220k	5%	1/4W
R15	⚠.1-212-375-61	METAL PLATE	18	5%	1W
R16	⚠.1-212-375-61	METAL PLATE	18	5%	1W
R17	⚠.1-217-596-51	METAL PLATE	0.05	5%	2W
R18	⚠.1-217-428-21	FUSIBLE	3.3	5%	1/2W
R19	⚠.1-246-491-15	CARBON	5.6k	5%	1/4W
R20	⚠.1-217-633-11	METAL PLATE	0.56	5%	2W
R21	⚠.1-246-509-15	CARBON	33k	5%	1/4W
R22	⚠.1-246-487-15	CARBON	3.9k	5%	1/4W
R23	⚠.1-246-481-15	CARBON	2.2k	5%	1/4W
R24	⚠.1-246-497-46	CARBON	10k	5%	1/6W
R25	⚠.1-246-491-46	CARBON	5.6k	5%	1/6W

NOTE:

The components identified by shading and mark ⚠ are critical for safety. Replace only with part number specified.

Les composants identifiés par une trame et une marque ⚠ sont critiques pour la sécurité. Ne les remplacer que par une pièce portant le numéro spécifié.

When indicating parts by reference number, please include the board name.

- =>: Due to standardization, interchangeable replacements may be substituted for parts specified in the diagrams.
- Items marked " ♦ " are not stocked since they are seldom required for routine service. Some delay should be anticipated when ordering these items.
- All variable and adjustable resistors have characteristic curve B, unless otherwise noted.

CAPACITORS
- MF : μF, PF : μμF

RESISTORS
- All resistors are in ohms
- F : nonflammable

COILS
- MMH : mH, UH : μH

POWER BLOCK

Ref.No.	Part No.	Description			Remark
R26	⚠1-246-487-46	CARBON	3.9k	5%	1/6W
R27	⚠1-246-027-032	CARBON	2.2k	5%	1/6W
R28	⚠1-246-477-46	CARBON	1.5k	5%	1/6W
R29	⚠1-246-465-46	CARBON	470	5%	1/6W
R30	⚠1-246-465-46	CARBON	470	5%	1/6W
R31	⚠1-246-443-46	CARBON	56	5%	1/6W
R32	⚠1-246-481-46	CARBON	2.2k	5%	1/6W
R33	⚠1-246-473-46	CARBON	1k	5%	1/6W
R34	⚠1-244-849-11	CARBON	100	5%	1/2W
R35	⚠1-246-449-46	CARBON	100	5%	1/6W
		VARIABLE RESISTOR			
RV1	⚠1-226-707-11		1k		
RV2	⚠1-226-707-11		1k		
RV3	⚠1-228-836-11		330		
		RELAY			
RL1	⚠1-515-215-11	RELAY	MR31-12		
		TRANSFORMER			
T1	⚠9-982-196-01	CHOKE COIL (B)			
T2	⚠9-982-194-01	CHOKE COIL, POWER			
T3	⚠1-421-438-11	CHOKE COIL COMMON			
T4	⚠1-447-394-11	TRANSFORMER, SWITCHING			
T5	⚠1-437-121-11	TRANSFORMER, DRIVE			
T6	⚠1-446-932-11	TRANSFORMER, AC			
T7	⚠1-408-762-11	CHOKE COIL (C)			
T8	⚠9-982-194-01	CHOKE COIL, POWER			
T9	⚠1-408-723-11	CHOKE COIL (B)			
T10	⚠9-982-194-01	CHOKE COIL (B)			
		SPARK GAP			
SG1	⚠1-519-272-11	SPARK GAP			
SG2	⚠1-519-272-11	SPARK GAP			
		MISCELLANEOUS			
		**********			
	A-6761-043-A	ACE ASSY (M-2)			

****

ACCESSORIES AND PACKING MATERIALS

	A-6701-177-A	COMMANDER ASSY
	1-417-063-00	TRANSFORMER, ANTENNA (EAC-24)
	1-513-379-00	CONVERTER (EAC-25)
	1-551-139-00	CORD, CONNECTION
	1-551-644-41	CORD, CONNECTION
	3-660-986-00	SHEET, PROTECTION
	3-671-402-00	INDICATOR, ACCESSORY
	3-671-832-00	BAG, PROTECTION
	3-671-873-00	CASE, ACCESSORY
	3-674-305-00	CUSHION (LOWER FRONT)
	3-674-306-00	CUSHION (LOWER REAR)
	3-674-307-00	CUSHION (UPPER FRONT)
	3-674-308-00	CUSHION (UPPER REAR)
	3-674-309-00	INDIVIDUAL CARTON (TYPE 1)
	3-674-317-00	LID, ACCESSORY CASE
	3-675-585-01	INDIVIDUAL CARTON (TYPE 2)
	3-703-338-01	LABEL, UL (570F)
	3-783-869-21	MANUAL, INSTRUCTION
	3-783-869-31	MANUAL, INSTRUCTION (CANADIAN MODEL
	3-795-338-21	MANUAL, INSTRUCTION
	3-795-338-31	MANUAL, INSTRUCTION (CANADIAN MO EL
	3-783-869-51	MANUAL, INSTRUCTION (TYPE 1 (EXCEPT THE U.S.A., CANADA), TYPE 2)
	3-795-338-51	MANUAL, INSTRUCTION (TYPE 1 (EXCEPT THE U.S.A., CANADA), TYPE
	4-491-302-31	CARD, WARRANTY (CANADIAN MODEL)
	4-491-335-21	CARD, WARRANTY (U.S.A.)
	4-491-336-21	REGISTRATION (U.S.A.)

NOTE:

The components identified by shading and mark ⚠ are critical for safety. Replace only with part number specified.

Les composants identifiés par une trame et une marque ⚠ sont critiques pour la sécurité. Ne les remplacer que par une pièce portant le numéro spécifié.

When indicating parts by reference number, please include the board name.

- =>: Due to standardization, interchangeable replacements may be substituted for parts specified in the diagrams.
- Items marked " ♦ " are not stocked since they are seldom required for routine service. Some delay should be anticipated when ordering these items.
- All variable and adjustable resistors have characteristic curve B, unless otherwise noted.

CAPACITORS
- MF : μF, PF : μμF

RESISTORS
- All resistors are in ohms
- F : nonflammable

COILS
- MMH : mH, UH : μH

RMT-312

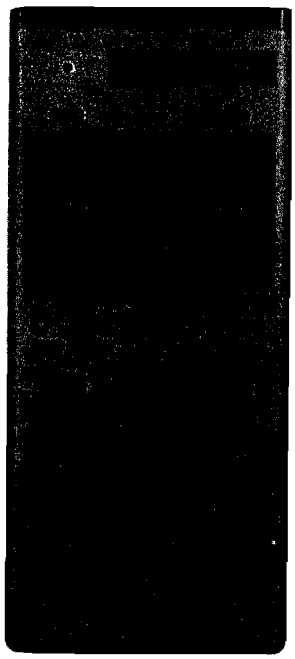

REMOTE CONTROL UNIT

SPECIFICATIONS

Remote control unit	
Remote control system	Infrared control
Power requirements	3V dc, 2 size AA batteries (IEC designation R6)
Dimensions	Approx. 65 × 150 × 18 mm (w/h/d) ($2\frac{5}{8} \times 6 \times \frac{3}{4}$ inches) incl. projecting parts and controls
Weight	Approx. 140 g (5 oz) incl. batteries

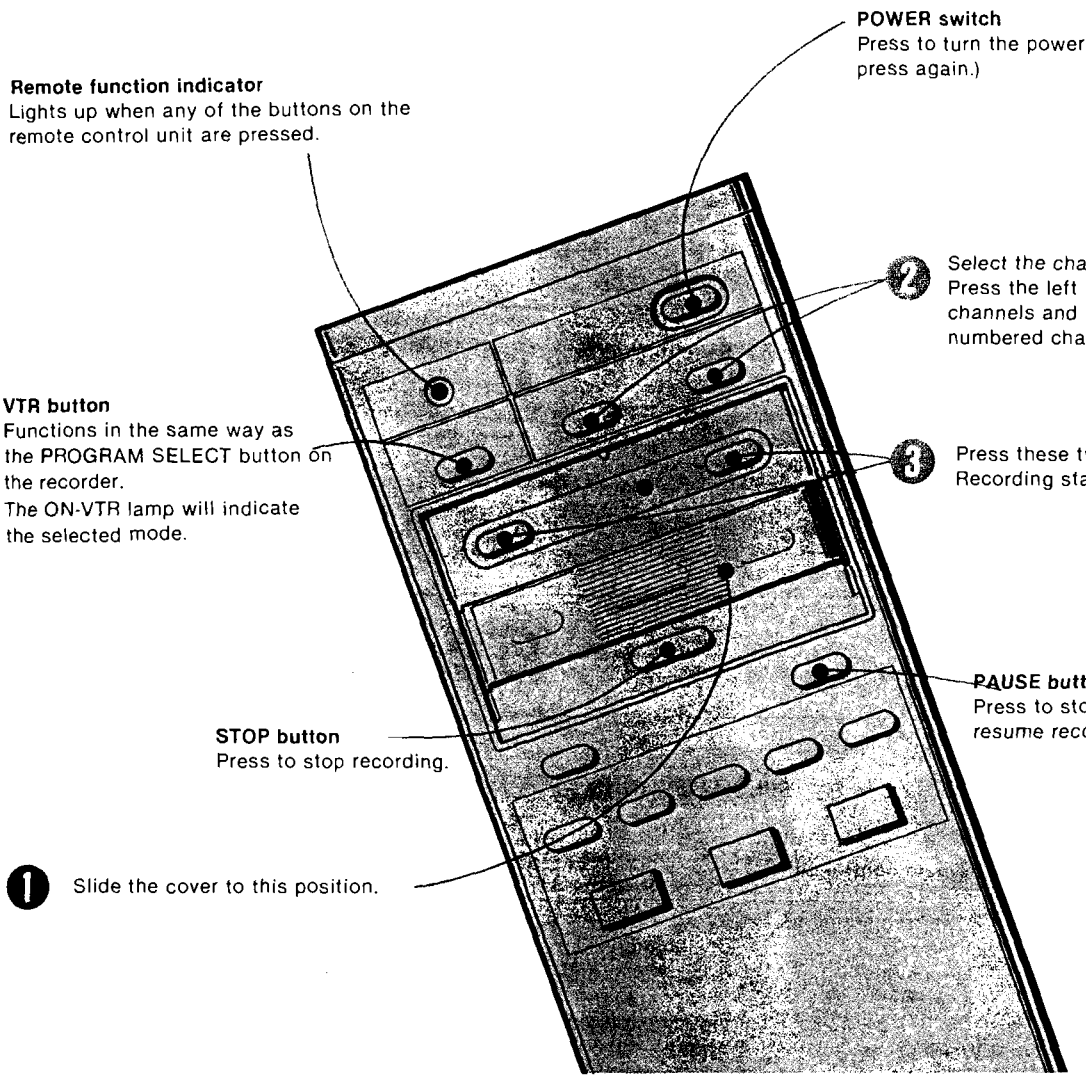

- The unused channels can be skipped during channel selection with the remote control unit if you have cleared the memory of these channels as described in "Clearing unused channels" on page 9 of the accompaning "SET-UP GUIDE".
- Recording will start immediately when the RECORD buttons on the remote control unit are pressed, even if a camera is connected to the recorder.

Playback
The buttons on the remote control unit perform the same function as the corresponding buttons on the video recorder.

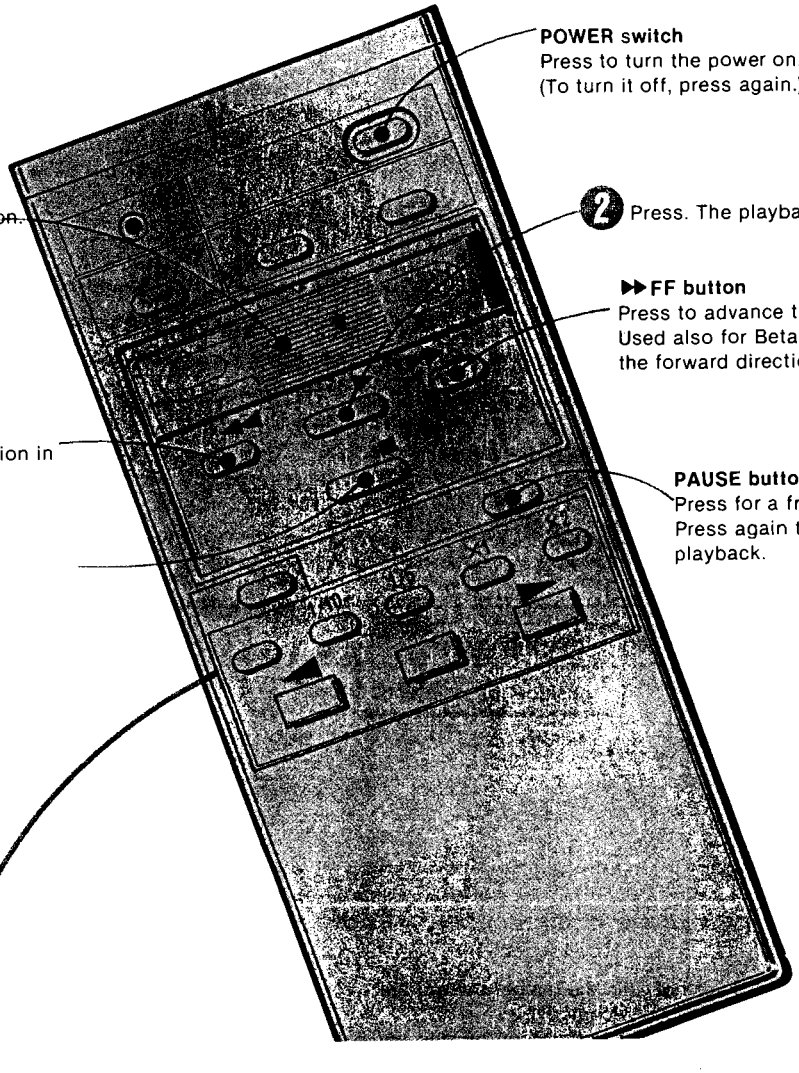

POWER switch
Press to turn the power on.
(To turn it off, press again.)

❶ Slide the cover to this position.

❷ Press. The playback begins.

▶▶FF button
Press to advance the tape rapidly.
Used also for Betascan operation in the forward direction.

REW ◀◀ button
Press to rewind the tape.
Used also for Betascan operation in the reverse direction.

PAUSE button
Press for a freeze picture.
Press again to resume normal speed playback.

❸ Press to stop the tape.

To see the playback picture at various speeds
❶ Press the SWING SEARCH button during playback.
❷ Select the playback speed.

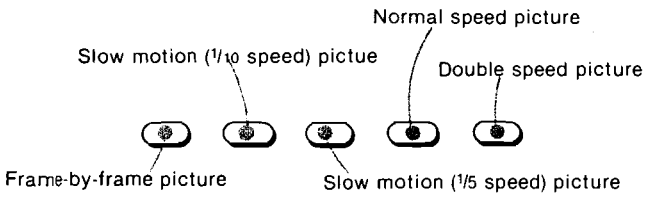

❸ Select the playback direction.

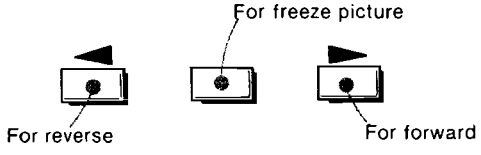

● For frame-by-frame playback, press and release the ◀ or ▶ button reepeatedly. Keep the button depressed for continous frame-by-frame playback.
● Back and forth playback is also possible in the same way as with the buttons on the recorder.

To resume normal playback, press the PLAY ▶ button.

HOW TO USE THE REMOTE CONTROL UNIT

Preparation

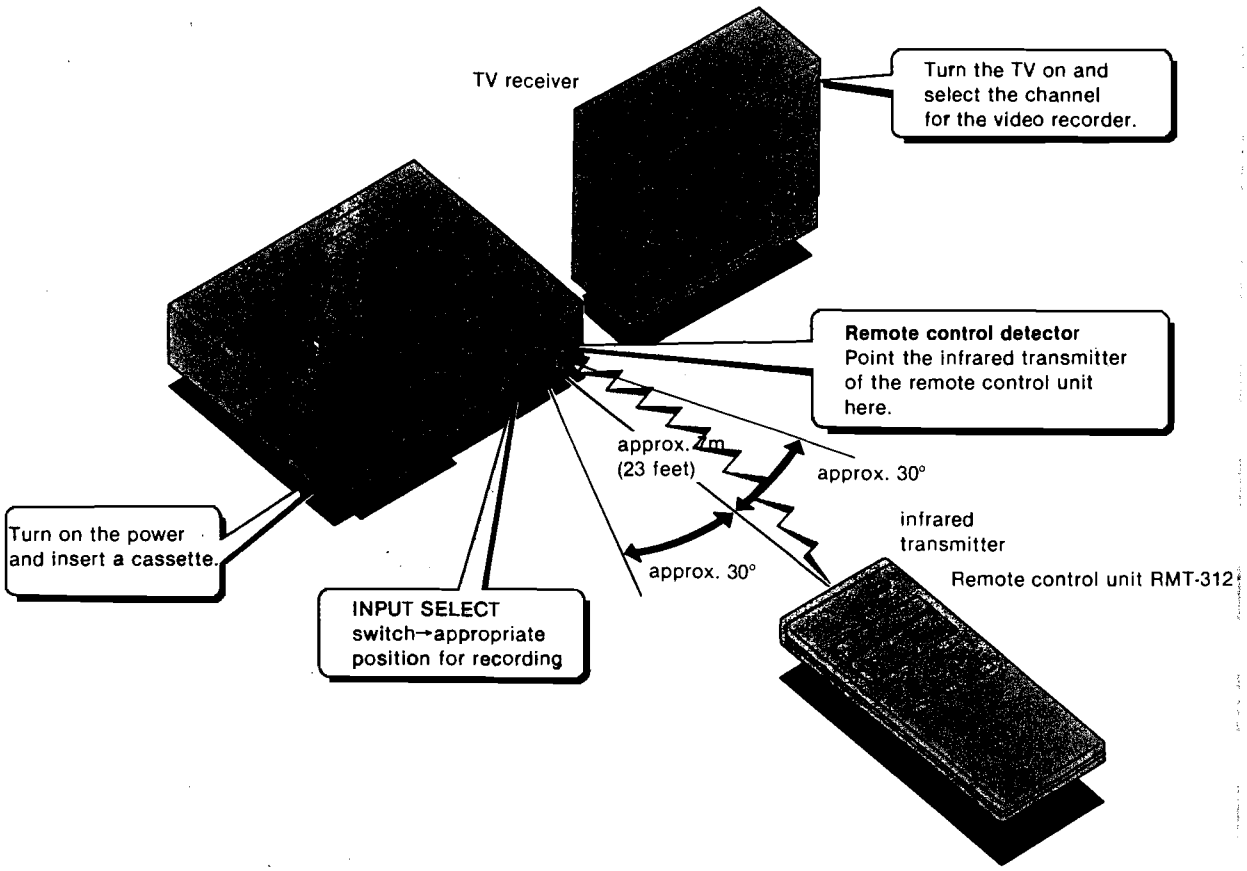

Notes

- There should be no obstacles between the remote control unit and the remote control detector of the recorder.
- The shorter the distance between the remote control unit and the recorder, the wider the angle within which the recorder can be controlled.

3. MOUNTING DIAGRAM

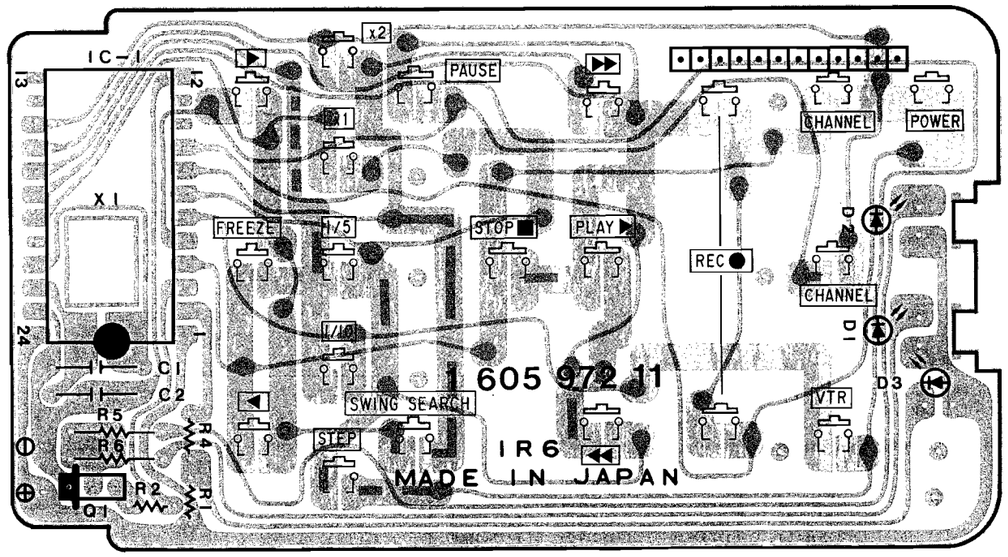

CX-786 2SC2673 SE303AX SLP144B

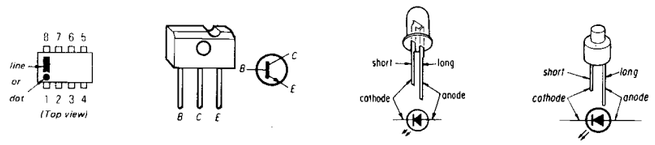

4. SCHEMATIC DIAGRAM

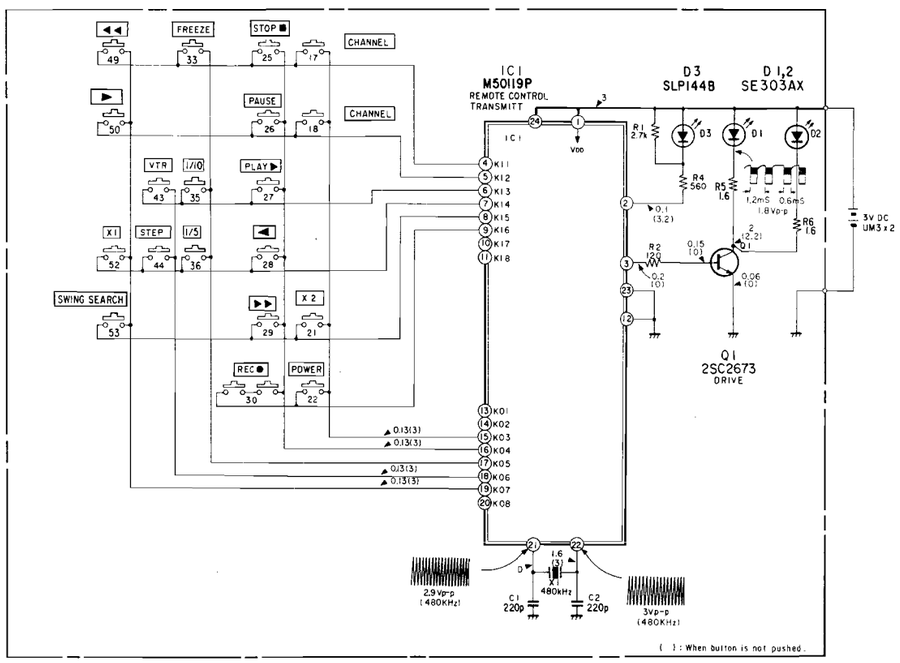

5. EXPLODED VIEW

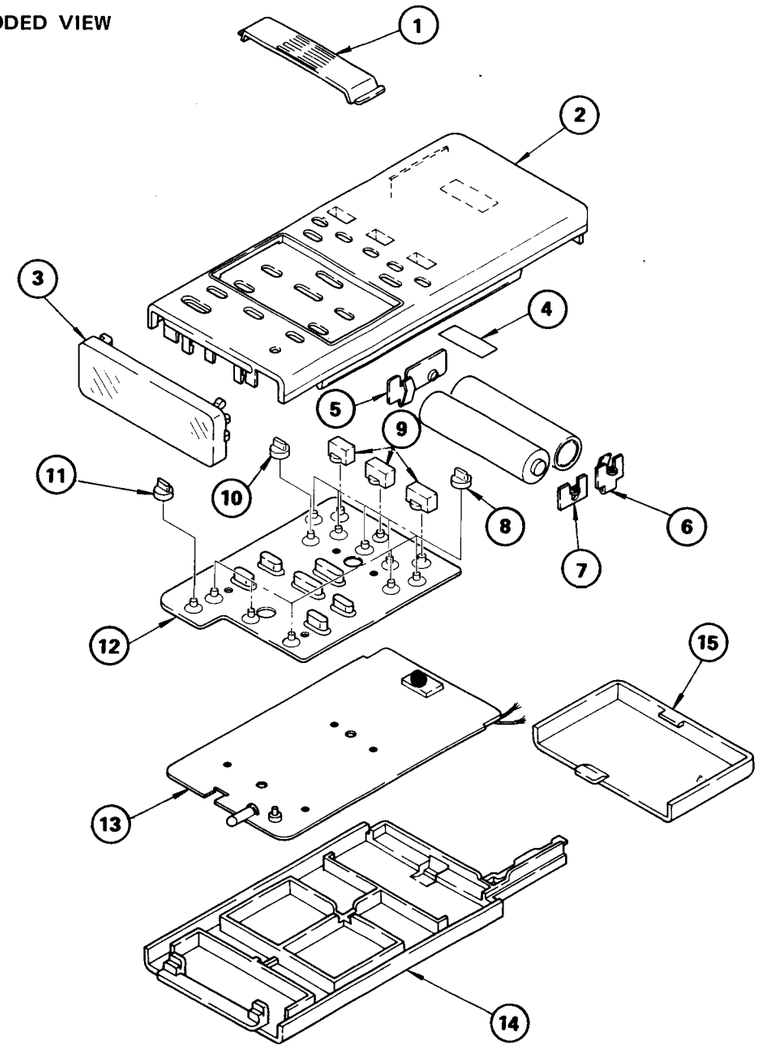

No.	Part No	Description	Remark
1	2-290-603-00	CURSOR	
2	X-3670-033-2	CASE (D) ASSY, UPPER	
3	2-290-608-00	PLATE, FROSTED	
4	♦ :3-703-159-00	LABEL, DESTINATION	
5	4-350-925-00	TERMINAL (C), BATTERY	
6	2-290-601-00	TERMINAL (A), BATTERY	
7	2-290-602-00	TERMINAL (B), BATTERY	
8	2-294-403-00	PUSH BUTTON (S)	
9	2-290-604-11	PUSH BUTTON	
10	2-294-403-11	PUSH BUTTON (S)	
11	2-294-401-00	BUTTON (S), POWER	
12	3-671-806-00	SHEET (D), RUBBER	
13	♦ :1-605-972-12	IR-6 BOARD	
14	2-290-611-00	CASE, LOWER	
15	2-290-606-00	COVER, BATTERY	

NOTE:
- Items with no part number and no description are not stocked because they are seldom required for routine service.
- The construction parts of an assembled part are indicated with a collation number in the remark column.
- As to the part numbered with E-, refer to the electrical parts list.
- Items marked " ♦ " are not stocked since they are seldom required for routine service. Some delay should be anticipated when ordering these items.

The components identified by shading and mark ⚠ are critical for safety. Replace only with part number specified.

Les composants identifiés par une trame et une marque ⚠ sont critiques pour la sécurité. Ne les remplacer que par une pièce portant le numéro spécifié.

6. ELECTRICAL PARTS LIST

RM

Ref.No	Part No	Description			Remark
	♦:1-605-972-12	IR-6 BOARD **********			
	2-290-601-00	TERMINAL (A), BATTERY			
	2-290-602-00	TERMINAL (B), BATTERY			
		CAPACITOR			
C001	1-161-315-00	CERAMIC	220PF	10% 50V	
C002	1-161-315-00	CERAMIC	220PF	10% 50V	
		DIODE			
D001	8-719-193-03	DIODE SE303AX			
D002	=>8-719-193-03	DIODE SE303AX			
D003	8-719-901-44	DIODE SLP144B			
		IC			
IC001	=>8-759-907-86	IC CX-786			
		TRANSISTOR			
Q001	8-729-967-32	TRANSISTOR 2SC2673			
		RESISTOR			
R001	1-246-788-00	CARBON	2.7K	1/8W	
R002	1-246-772-00	CARBON	120	1/8W	
R004	1-246-780-00	CARBON	560	1/8W	
R005	1-246-406-00	CARBON	1.6 5%	1/4W	
R006	1-246-406-00	CARBON	1.6 5%	1/4W	
		CRYSTAL			
X001	1-527-476-00	OSCILLATOR, CERAMIC			

****

ACCESSORIES AND PACKING MATERIALS
****

Part.No	Description	Remark
3-701-622-00	BAG, POLYETHYLENE	

NOTE:

The components identified by shading and mark ⚠ are critical for safety. Replace only with part number specified.

Les composants identifiés par une trame et une marque ⚠ sont critiques pour la sécurité. Ne les remplacer que par une pièce portant le numéro spécifié.

When indicating parts by reference number, please include the board name.

- =>: Due to standardization, interchangeable replacements may be substituted for parts specified in the diagrams.
- Items marked " ♦ " are not stocked since they are seldom required for routine service. Some delay should be anticipated when ordering these items.
- All variable and adjustable resistors have characteristic curve B, unless otherwise noted.

CAPACITORS
- MF : μF, PF : μμF

RESISTORS
- All resistors are in ohms
- F : nonflammable

COILS
- MMH : mH, UH : μH

STANDARD PARTS LIST

ELECTROLYTIC CAPACITORS

CAP. (μF)	RATING → : Use the high voltage rated one.						
	6.3 VOLT.	10 VOLT.	16 VOLT.	25 VOLT.	35 VOLT.	50 VOLT.	63 VOLT.
	PART No.	PART No.	PART No.	PART No.	PART No.	PART No.	PART No.
0.47						→	→
1.0						→	→
2.2						→	→
3.3						→	→
4.7				→	→	→	1-123-369-00
10			→	→	→	1-123-356-00	1-123-370-00
22			→	1-123-330-00	→	1-123-357-00	1-123-371-00
33	→	→	1-123-318-00	→	1-123-343-00	→	1-123-372-00
47	→	1-123-306-00	→	1-123-332-00	→	1-123-359-00	1-123-373-00
100	→	1-123-307-00	→	1-123-333-00	1-123-345-00	1-123-360-00	1-123-374-00
220	→	1-123-308-00	1-123-321-00	1-123-334-00	1-123-346-00	1-123-361-00	1-123-375-00
330	→	1-123-309-00	1-123-322-00	1-123-335-00	1-123-347-00	1-123-362-00	1-123-376-00
470	1-123-298-00	1-123-310-00	1-123-323-00	1-123-336-00	1-123-348-00	1-123-363-00	1-123-377-00
1000	1-123-299-00	1-123-311-00	1-123-324-00	1-123-337-00	1-123-349-00	1-123-364-00	1-123-378-00
2200	1-123-300-00	→	1-123-325-00	1-123-338-00	1-123-350-00		
3300	1-123-301-00	1-123-313-00	1-123-326-00	1-123-339-00			
4700	1-123-302-00	1-123-314-00	1-123-327-00				
6800	1-123-303-00	1-123-315-00					
10000	1-123-304-00						

CAP. (μF)	100 VOLT.	160 VOLT.	250 VOLT.	350 VOLT.
	PART No.	PART No.	PART No.	PART No.
0.47	1-123-379-00			
1.0	1-123-380-00	1-123-252-00	1-123-003-00	1-121-168-00
2.2	1-123-381-00	1-123-026-00	1-123-027-00	1-123-028-00
3.3	1-123-382-00	1-121-707-00	1-123-004-00	1-123-006-00
4.7	1-123-383-00	1-121-246-00	1-121-759-00	1-123-007-00
10	1-123-384-00	1-121-999-00	1-123-254-00	1-123-008-00
22	1-123-385-00	1-123-253-00	1-123-005-00	1-123-022-00
33	1-123-386-00	1-121-757-00		
47	1-123-387-00	1-121-919-00		
100	1-123-388-00			
220	1-123-389-00			
330	1-123-390-00			
470	1-123-391-00			

CERAMIC CAPACITORS

CAP. (pF)	RATING 50 VOLT. PART No.	CAP. (pF)	50 VOLT. PART No.	CAP. (pF)	50 VOLT. PART No.	CAP. (μF)	50 VOLT. PART No.
0.5	1-101-837-00	22	1-102-959-00	150	1-101-361-00	0.001	1-102-074-00
0.75	1-101-586-00	24	1-102-960-00	160	1-101-367-00	0.0012	1-102-118-00
1.0	1-102-934-00	27	1-102-961-00	180	1-102-976-00	0.0015	1-102-119-00
1.5	1-101-576-00	30	1-102-962-00	200	1-102-977-00	0.0018	1-102-120-00
2.0	1-102-935-00	33	1-102-963-00	220	1-102-978-00	0.0022	1-102-121-00
3	1-102-936-00	36	1-102-964-00	240	1-102-979-00	0.0027	1-102-122-00
4	1-102-937-00	39	1-102-965-00	270	1-102-980-00	0.0033	1-102-123-00
5	1-102-942-00	43	1-102-966-00	300	1-102-981-00	0.0039	1-102-124-00
6	1-102-943-00	47	1-101-880-00	330	1-102-820-00	0.0047	1-102-125-00
7	1-102-944-00	51	1-101-882-00	360	1-102-821-00	0.0056	1-102-126-00
8	1-102-945-00	56	1-101-884-00	390	1-102-822-00	0.0068	1-102-127-00
9	1-102-946-00	62	1-101-886-00	430	1-102-823-00	0.0082	1-102-128-00
10	1-102-947-00	68	1-101-888-00	470	1-102-824-00	0.01	1-102-129-00
11	1-102-948-00	75	1-101-890-00	510	1-101-059-00	0.022	1-101-005-00
12	1-102-949-00	82	1-102-971-00	560	1-102-115-00	0.047	1-101-006-00
13	1-102-950-00	91	1-102-972-00	680	1-102-116-00		
15	1-102-951-00	100	1-102-973-00	820	1-102-117-00		
16	1-102-952-00	110	1-102-815-00				
18	1-102-953-00	120	1-102-816-00				
20	1-102-958-00	130	1-101-081-00				

0.001μF = 1,000pF

MYLAR CAPACITORS

CAP. (μF)	RATING 50 VOLT. PART No.	100 VOLT. PART No.	200 VOLT. PART No.	CAP. (μF)	50 VOLT. PART No.	100 VOLT. PART No.	200 VOLT. PART No.	CAP. (μF)	50 VOLT. PART No.	100 VOLT. PART No.	200 VOLT. PART No.
0.001	1-108-227-00	1-108-365-00	1-108-409-00	0.01	1-108-239-00	1-108-377-00	1-108-421-00	0.1	1-108-251-00	1-108-389-00	1-108-433-00
0.0012	1-108-351-00	1-108-366-00	1-108-410-00	0.012	1-108-357-00	1-108-378-00	1-108-422-00	0.12	1-108-363-00	1-108-390-00	1-108-434-00
0.0015	1-108-228-00	1-108-367-00	1-108-411-00	0.015	1-108-240-00	1-108-379-00	1-108-423-00	0.15	1-108-252-00	1-108-391-00	1-108-435-00
0.0018	1-108-352-00	1-108-368-00	1-108-412-00	0.018	1-108-358-00	1-108-380-00	1-108-424-00	0.18	1-108-364-00	1-108-392-00	1-108-436-00
0.0022	1-108-230-00	1-108-369-00	1-108-413-00	0.022	1-108-242-00	1-108-381-00	1-108-425-00	0.22	1-108-254-00	1-108-393-00	1-108-437-00
0.0027	1-108-353-00	1-108-370-00	1-108-414-00	0.027	1-108-359-00	1-108-382-00	1-108-426-00	0.27	1-108-854-00		
0.0033	1-108-232-00	1-108-371-00	1-108-415-00	0.033	1-108-244-00	1-108-383-00	1-108-427-00	0.33	1-108-855-00		
0.0039	1-108-354-00	1-108-372-00	1-108-416-00	0.039	1-108-360-00	1-108-384-00	1-108-428-00	0.39	1-108-856-00		
0.0047	1-108-234-00	1-108-373-00	1-108-417-00	0.047	1-108-246-00	1-108-385-00	1-108-429-00	0.47	1-108-857-00		
0.0056	1-108-355-00	1-108-374-00	1-108-418-00	0.056	1-108-361-00	1-108-386-00	1-108-430-00				
0.0068	1-108-237-00	1-108-375-00	1-108-419-00	0.068	1-108-249-00	1-108-387-00	1-108-431-00				
0.0082	1-108-356-00	1-108-376-00	1-108-420-00	0.082	1-108-362-00	1-108-388-00	1-108-432-00				

1/4 WATT CARBON RESISTORS

Ω	*Part No.*	Ω	*Part No.*	Ω	*Part No.*	Ω	*Part No.*	Ω	*Part No.*	Ω	*Part No.*	Ω	*Part No.*
1.0	1-246-401-00	10	1-246-425-00	100	1-246-449-00	1.0k	1-246-473-00	10k	1-246-497-00	100k	1-246-521-00	1.0M	1-246-545-00
1.1	1-246-402-00	11	1-246-426-00	110	1-246-450-00	1.1k	1-246-474-00	11k	1-246-498-00	110k	1-246-522-00	1.1M	1-210-814-00
1.2	1-246-403-00	12	1-246-427-00	120	1-246-451-00	1.2k	1-246-475-00	12k	1-246-499-00	120k	1-246-523-00	1.2M	1-210-815-00
1.3	1-246-404-00	13	1-246-428-00	130	1-246-452-00	1.3k	1-246-476-00	13k	1-246-500-00	130k	1-246-524-00	1.3M	1-210-816-00
1.5	1-246-405-00	15	1-246-429-00	150	1-246-453-00	1.5k	1-246-477-00	15k	1-246-501-00	150k	1-246-525-00	1.5M	1-210-817-00
1.6	1-246-406-00	16	1-246-430-00	160	1-246-454-00	1.6k	1-246-478-00	16k	1-246-502-00	160k	1-246-526-00	1.6M	1-210-818-00
1.8	1-246-407-00	18	1-246-431-00	180	1-246-455-00	1.8k	1-246-479-00	18k	1-246-503-00	180k	1-246-527-00	1.8M	1-210-819-00
2.0	1-246-408-00	20	1-246-432-00	200	1-246-456-00	2.0k	1-246-480-00	20k	1-246-504-00	200k	1-246-528-00	2.0M	1-210-820-00
2.2	1-246-409-00	22	1-246-433-00	220	1-246-457-00	2.2k	1-246-481-00	22k	1-246-505-00	220k	1-246-529-00	2.2M	1-210-821-00
2.4	1-246-410-00	24	1-246-434-00	240	1-246-458-00	2.4k	1-246-482-00	24k	1-246-506-00	240k	1-246-530-00	2.4M	1-244-754-00
2.7	1-246-411-00	27	1-246-435-00	270	1-246-459-00	2.7k	1-246-483-00	27k	1-246-507-00	270k	1-246-531-00	2.7M	1-244-755-00
3.0	1-246-412-00	30	1-246-436-00	300	1-246-460-00	3.0k	1-246-484-00	30k	1-246-508-00	300k	1-246-532-00	3.0M	1-244-756-00
3.3	1-246-413-00	33	1-246-437-00	330	1-246-461-00	3.3k	1-246-485-00	33k	1-246-509-00	330k	1-246-533-00	3.3M	1-244-757-00
3.6	1-246-414-00	36	1-246-438-00	360	1-246-462-00	3.6k	1-246-486-00	36k	1-246-510-00	360k	1-246-534-00	3.6M	1-244-758-00
3.9	1-246-415-00	39	1-246-439-00	390	1-246-463-00	3.9k	1-246-487-00	39k	1-246-511-00	390k	1-246-535-00	3.9M	1-244-759-00
4.3	1-246-416-00	43	1-246-440-00	430	1-246-464-00	4.3k	1-246-488-00	43k	1-246-512-00	430k	1-246-536-00	4.3M	1-244-760-00
4.7	1-246-417-00	47	1-246-441-00	470	1-246-465-00	4.7k	1-246-489-00	47k	1-246-513-00	470k	1-246-537-00	4.7M	1-244-761-00
5.1	1-246-418-00	51	1-246-442-00	510	1-246-466-00	5.1k	1-246-490-00	51k	1-246-514-00	510k	1-246-538-00	5.1M	1-244-762-00
5.6	1-246-419-00	56	1-246-443-00	560	1-246-467-00	5.6k	1-246-491-00	56k	1-246-515-00	560k	1-246-539-00		
6.2	1-246-420-00	62	1-246-444-00	620	1-246-468-00	6.2k	1-246-492-00	62k	1-246-516-00	620k	1-246-540-00		
6.8	1-246-421-00	68	1-246-445-00	680	1-246-469-00	6.8k	1-246-493-00	68k	1-246-517-00	680k	1-246-541-00		
7.5	1-246-422-00	75	1-246-446-00	750	1-246-470-00	7.5k	1-246-494-00	75k	1-246-518-00	750k	1-246-542-00		
8.2	1-246-423-00	82	1-246-447-00	820	1-246-471-00	8.2k	1-246-495-00	82k	1-246-519-00	820k	1-246-543-00		
9.1	1-246-424-00	91	1-246-448-00	910	1-246-472-00	9.1k	1-246-496-00	91k	1-246-520-00	910k	1-246-544-00		

HARDWARE NOMENCLATURE

Screw:

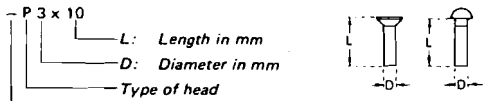

Nut, Washer, Retaining ring:

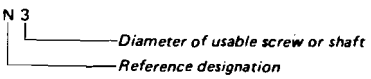

Reference Designation	Shape	Description	Remarks
SCREWS			
P		pan-head screw	binding-head (B) screw for replacement
PWH		pan-head screw with washer face	binding-head (B) screw and flat washer for replacement
PS PSP		pan-head screw with spring washer	binding-head (B) screw and spring washer for replacement
PSW PSPW		pan-head screw with spring and flat washers	binding-head (B) screw and spring and flat washers for replacement
R		round-head screw	binding-head (B) screw for replacement
K		flat-countersunk-head screw	
RK		oval-countersunk-head screw	
B		binding-head screw	
T		truss-head screw	binding-head (B) screw for replacement
F		flat-fillister-head screw	
RF		fillister-head screw	
BV		brazier-head screw	

Reference Designation	Shape	Description	Remarks
SELF-TAPPING SCREWS			
TA		self-tapping screw	ex: TA, P 3 x 10
PTP		pan-head self-tapping screw	binding-head self-tapping (TA, B) screw for replacement
PTPWH		pan-head self-tapping screw with washer face	binding-head self tapping (TA, B) screw and flat washer for replacement
PTTWH		pan-head thread-rolling screw with washer face	binding-head (B) screw and flat washer for replacement
SET SCREWS			
SC		set screw	
SC		hexagon-socket set screw	ex: SC 2.6 x 4, hexagon socket
NUT			
N		nut	
WASHERS			
W		flat washer	
SW		spring washer	
LW		internal-tooth lock washer	ex: LW3, internal
LW		external-tooth lock washer	ex: LW3, external
RETAINING RINGS			
E		retaining ring	
G		grip-type retaining ring	

9-972-144-03

Sony Corporation
Audio & Video Group © 1982

English
82F0514-1
Printed in Japan